

ELEVATION TO STOCKTON STREET

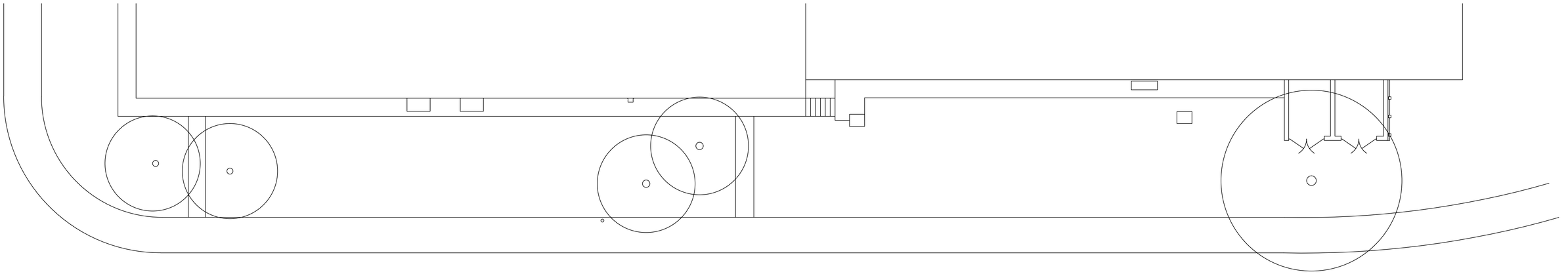

PLAN

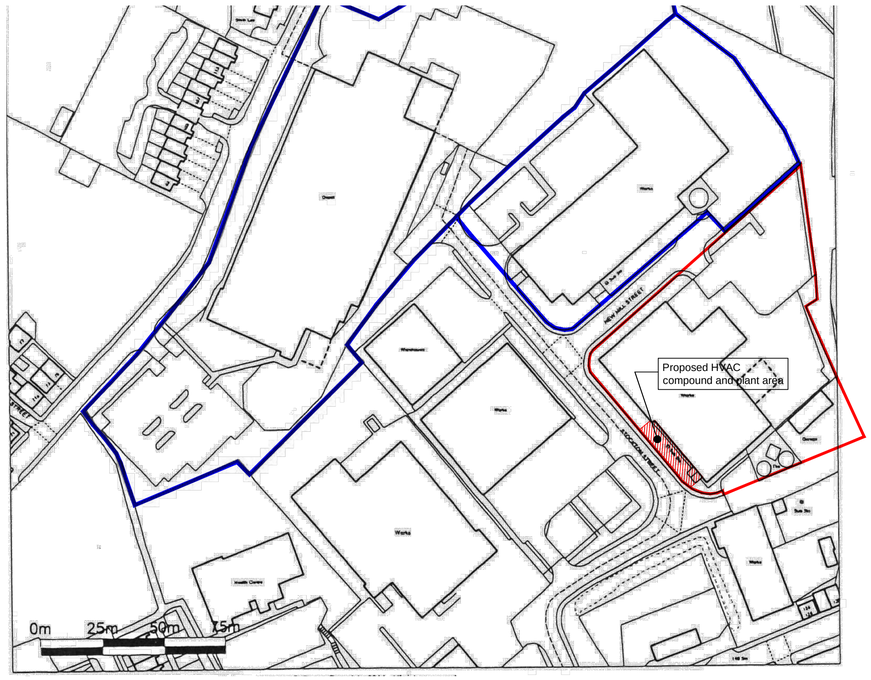

LOCATION PLAN - scale 1:1250

rev:	date:	description

AJ COCKER ASSOCIATES
CHARTERED BUILDING SURVEYORS

New Century House
176 Drake Street
Rochdale
OL16 1UP
Tel: 01706 764880
Fax: 01706 764881

www.ajcockerassociates.co.uk
mail@ajcockerassociates.co.uk

RICS the mark of property professionalism worldwide

Proposed permanent security & acoustic fence and ductwork & use of land for non permanant for HVAC equipment at
Unit 4-7 Littleborough Industrial Estate,
Stockton Street, Littleborough

EXISTING

scale: 1:100 @A1 UNO

date: June 2020

drawn: AJC

Client: McCormick UK

Dwg. Nr.
Mc229-001revA