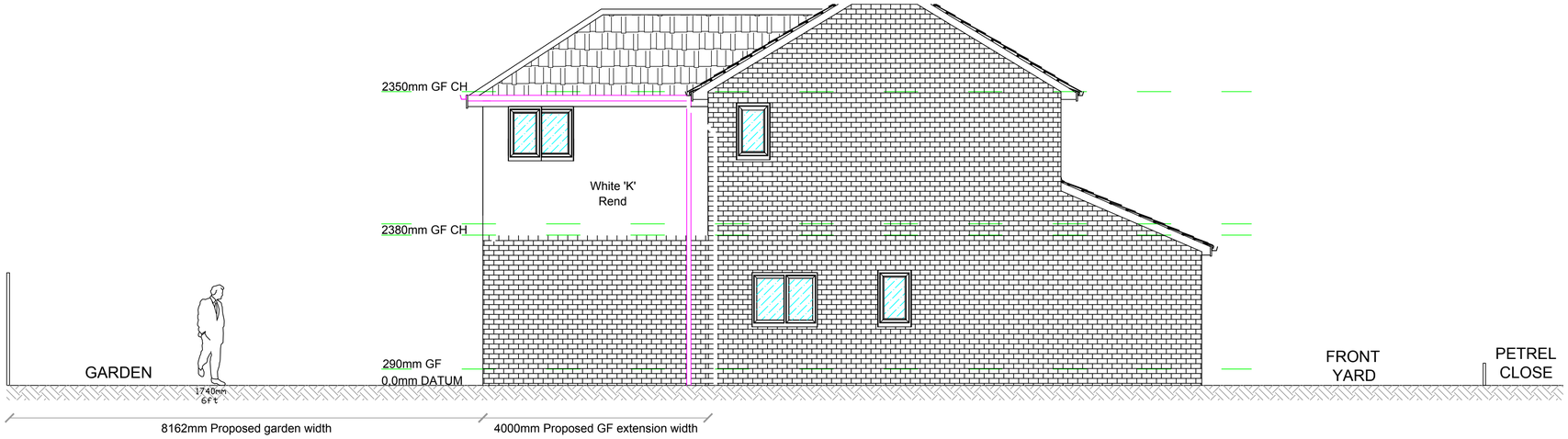

PROPOSED NEIGHBORING ELEVATION 1:50 @ A1



PROPOSED FRONT ELEVATION 1:50 @ A1

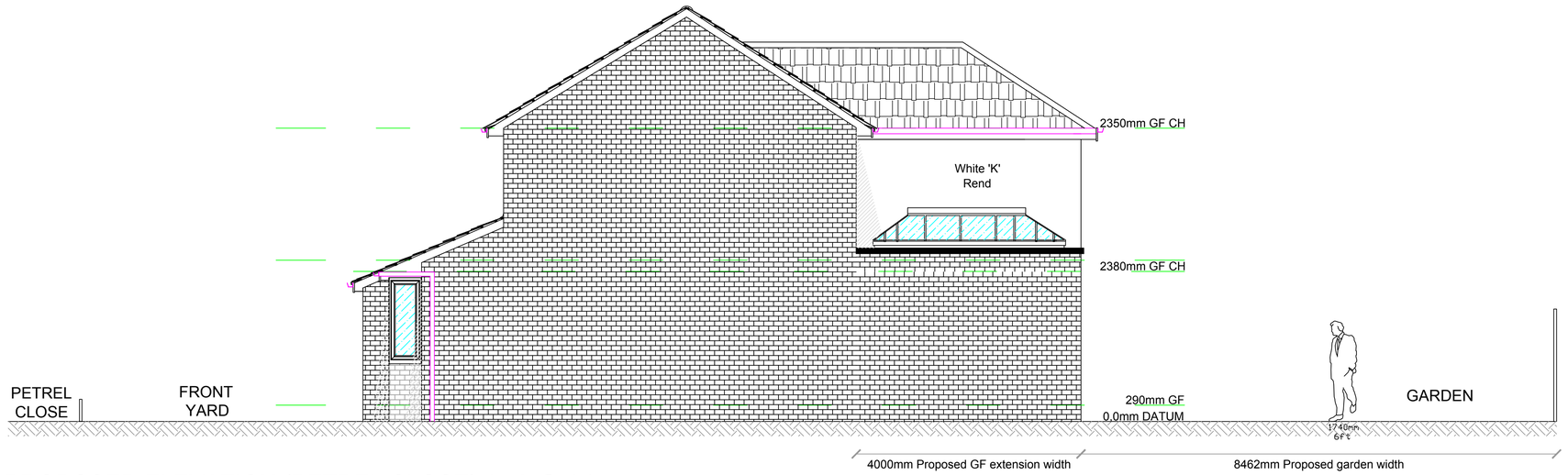

PROPOSED ELEVATION (PETREL CLOSE) 1:50 @ A1

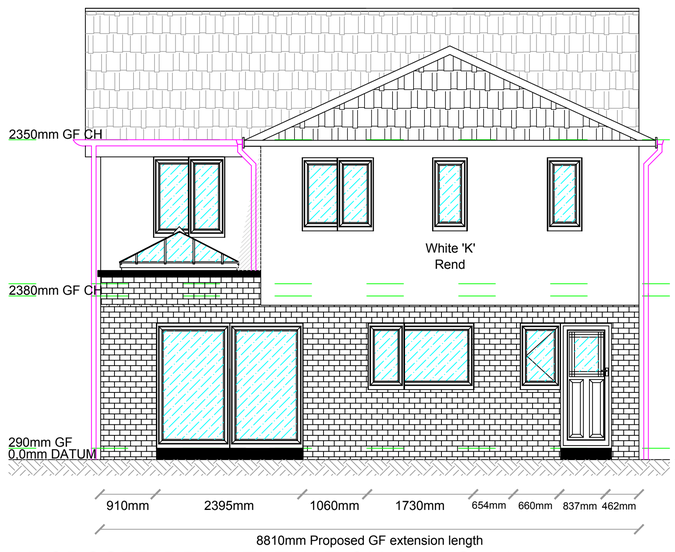

PROPOSED REAR ELEVATION 1:50 @ A1

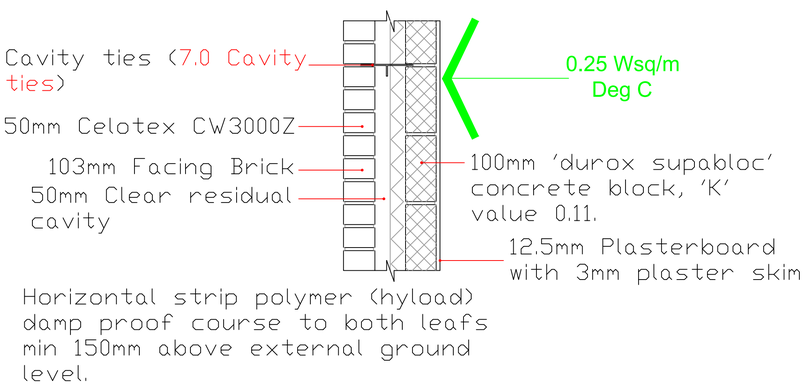

PARTIAL FILL CAVITY WALL
1:10 @ A1 (5.0 External walls above)

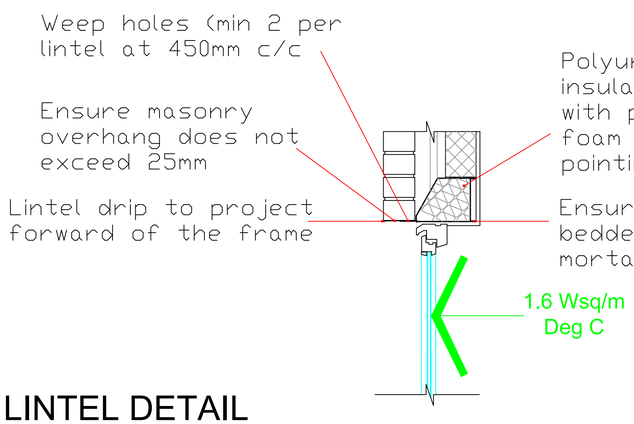

LINTEL DETAIL
1:10 @ A1 (7.0 Lintels)

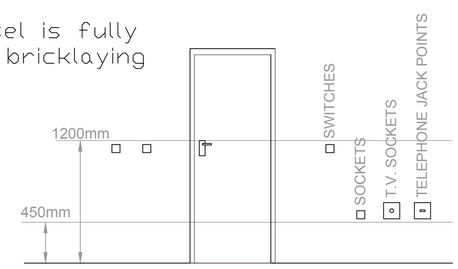

ELECTRICAL SERVICES & FITTINGS 1:30 @ A1

MIRAJ
ARCHITECTURAL DESIGN LTD

Rev.	Revision details	By	Chk.	App.	Date

NOTE TO CONTRACTOR: DO NOT SCALE FROM THIS DRAWING

Client
2 PETREL CLOSE, ROCHDALE

Project
DOUBLE STOREY REAR EXTENSION.

Title
PROPOSED ELEVATIONS

Drawn by	Date	Purpose of issue	Scale
	APR.	PLANNING.	1:50 @ A1
Checked by	Date	Drawing No.	