This drawing is the copyright of MTC Design
and is not to be reproduced without permission

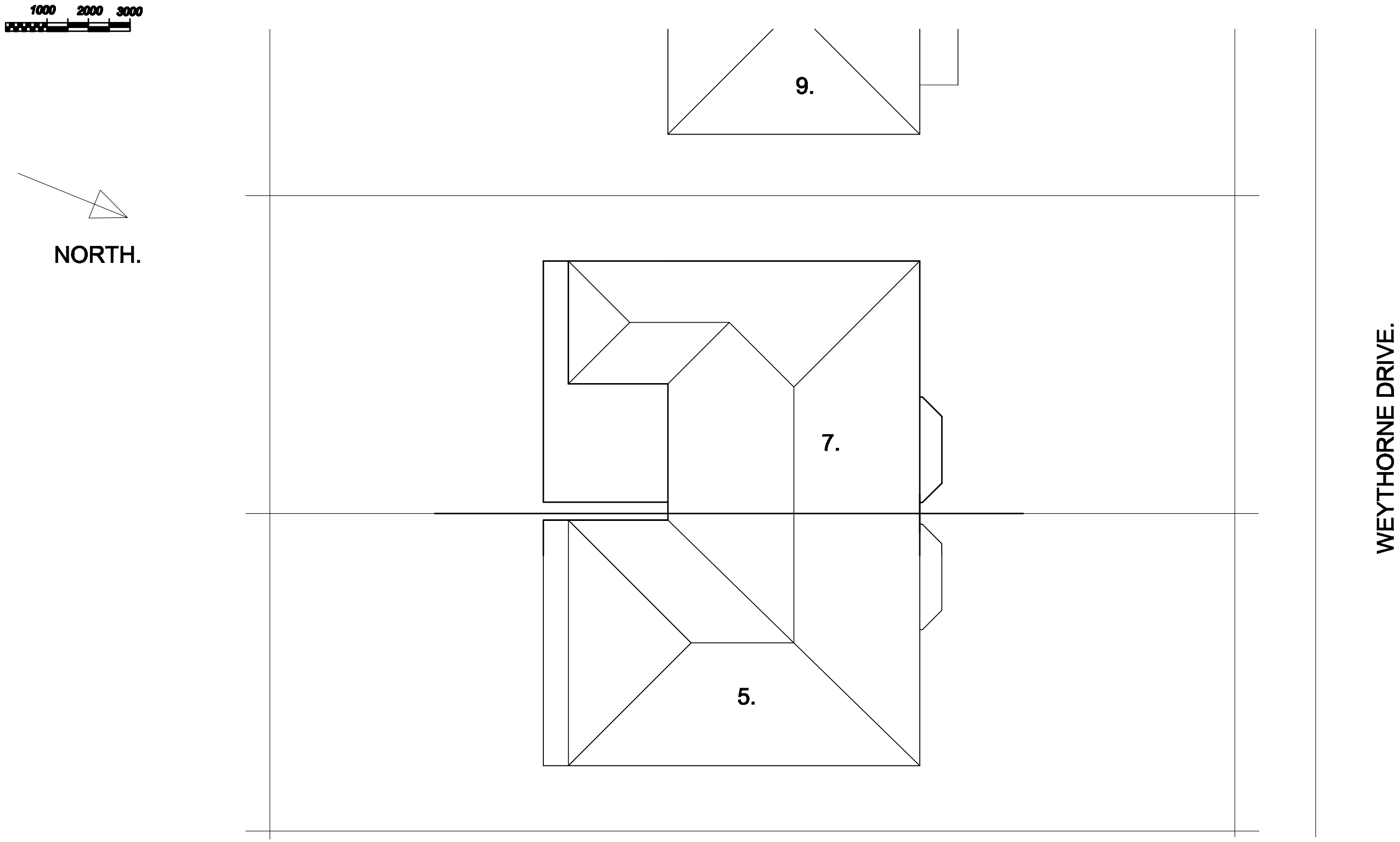

EXISTING SITE PLAN.

Revision A - Site Plan Amended. - 13th November 2019.	**Title :** PROPOSED FIRST FLOOR REAR EXTENSION.	**Project :** 7, WEYTHORNE DRIVE, BURY. BL9 7TX	MTC Designs Scale 1:100 @ A3 Date: October 2019. Drawing No: P03A

31 Exford Drive Bolton BL2 6TB
T: 01204 418714 M: 07708026514
Email: michaelfcourt@aol.com