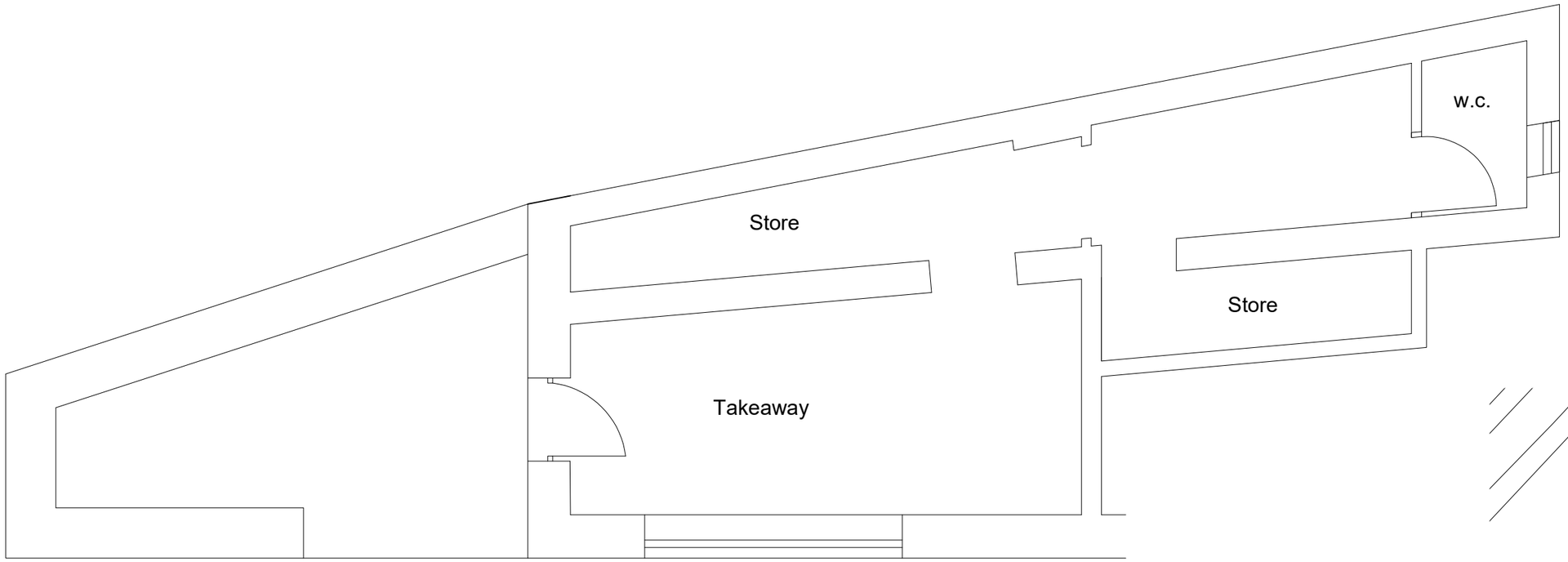

GROUND FLOOR PLAN
(EXISTING)

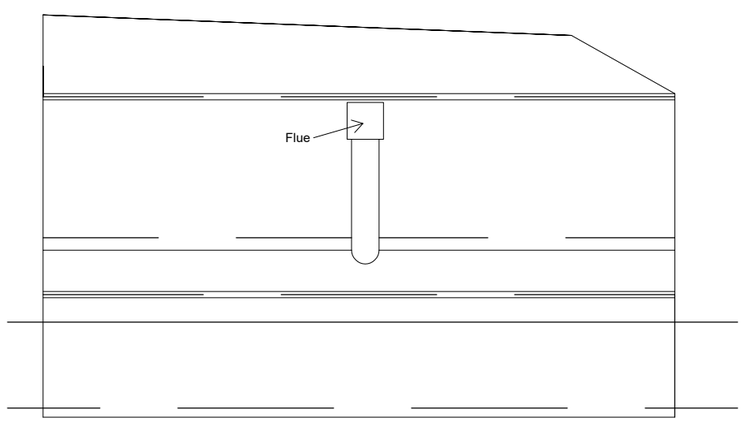

REAR ELEVATION
(EXISTING)

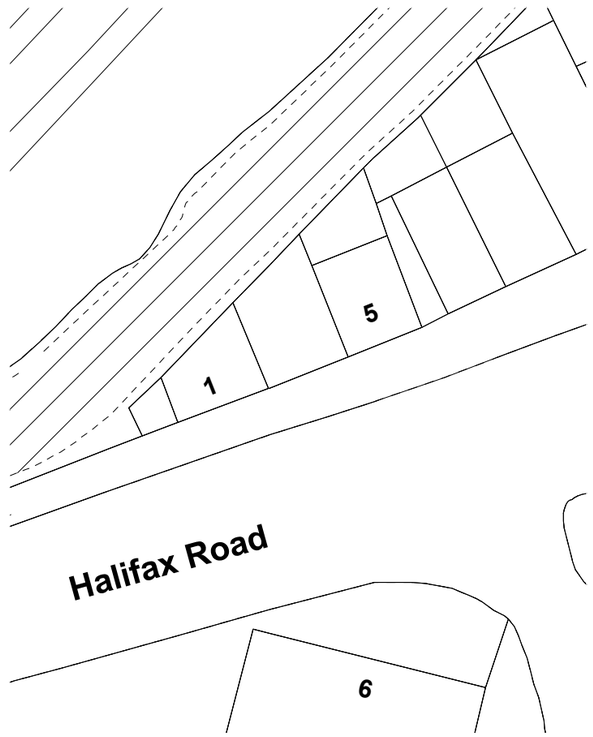

SITE PLAN
(EXISTING)

Building Design Services

M.FAROOQ
6 Stock Close
Rochdale
OL12 6BB
01706 712231
0796 7605 763

bds

For:

MR HAYAT MAHMUD SABBIR

PROPOSED CHANGE OF USE FROM SANDWICH SHOP TO HOT FOOD TAKEAWAY

1 Halifax Road
Rochdale
OL15 0HL

Scale:

(Plan)
1:50 @ A3

(Elevation)
1:100 @ A3

(Site plan)
1:500 @ A3

Job No. & Sheet

1743/1

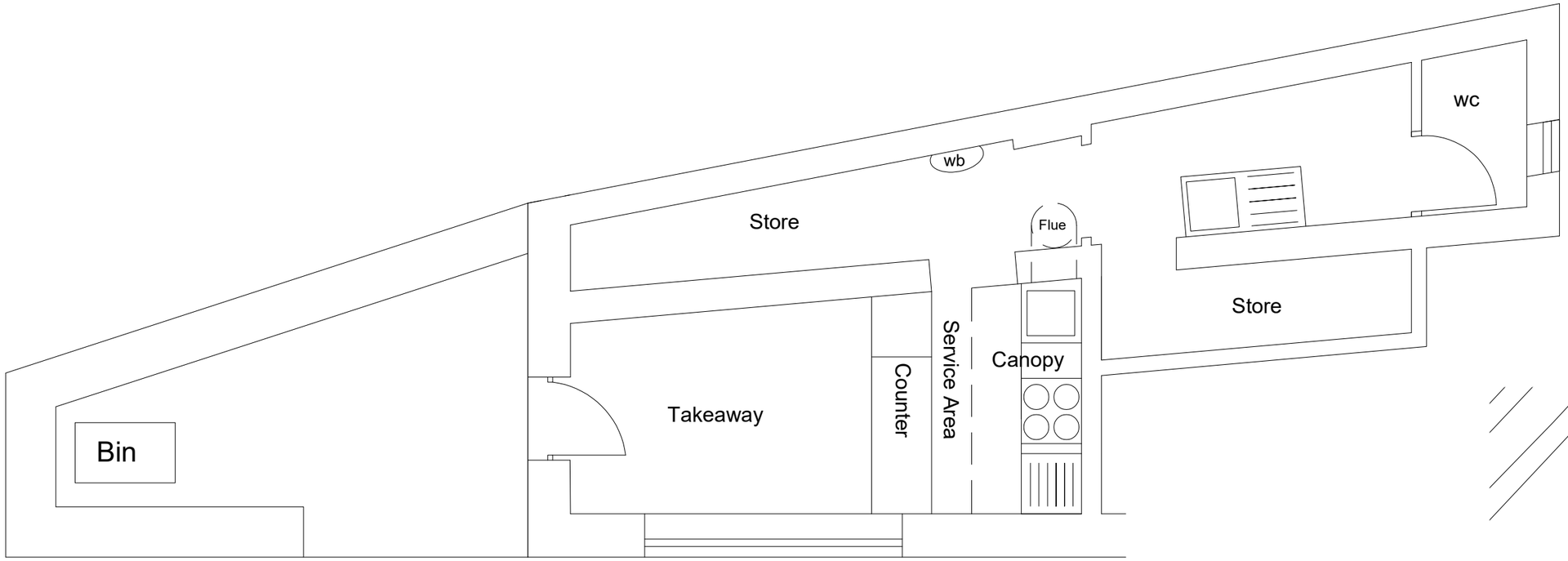

GROUND FLOOR PLAN
(PROPOSED)

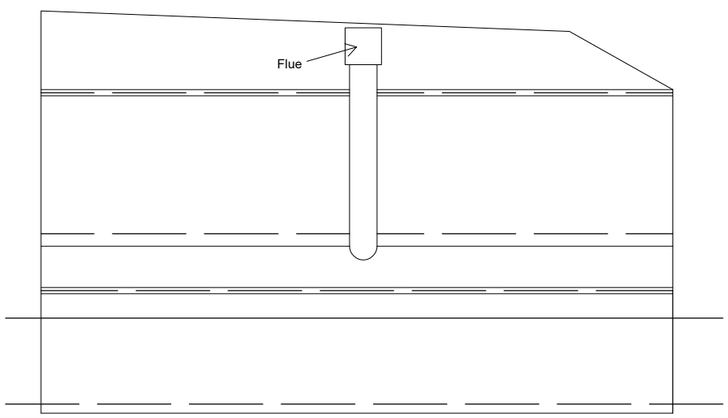

REAR ELEVATION
(PROPOSED)

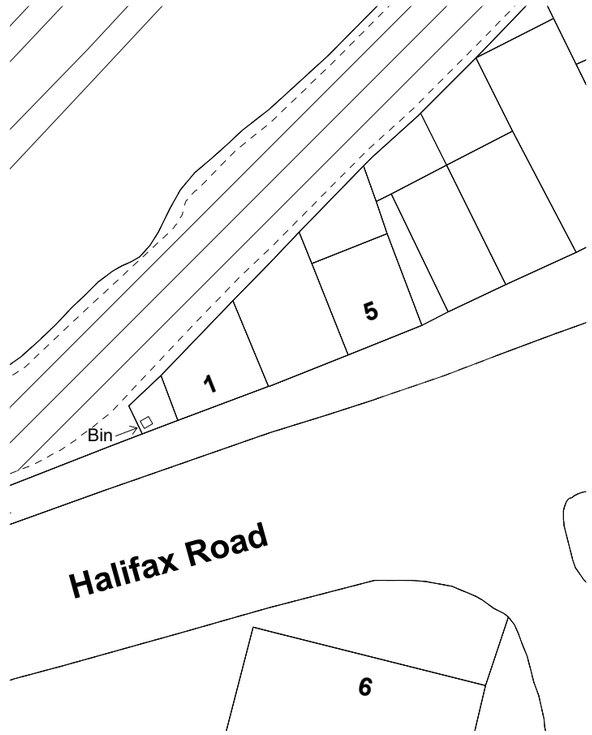

SITE PLAN
(PROPOSED)

Building Design Services

M.FAROOQ
6 Stock Close
Rochdale
OL12 6BB
01706 712231
0796 7605 763

bds

For:

MR HAYAT MAHMUD SABBIR

PROPOSED CHANGE OF USE FROM SANDWICH SHOP TO HOT FOOD TAKEAWAY

1 Halifax Road
Rochdale
OL15 0HL

Scale:

(Plan)
1:50 @ A3

(Elevation)
1:100 @ A3

(Site plan)
1:500 @ A3

Job No. & Sheet

1743/2