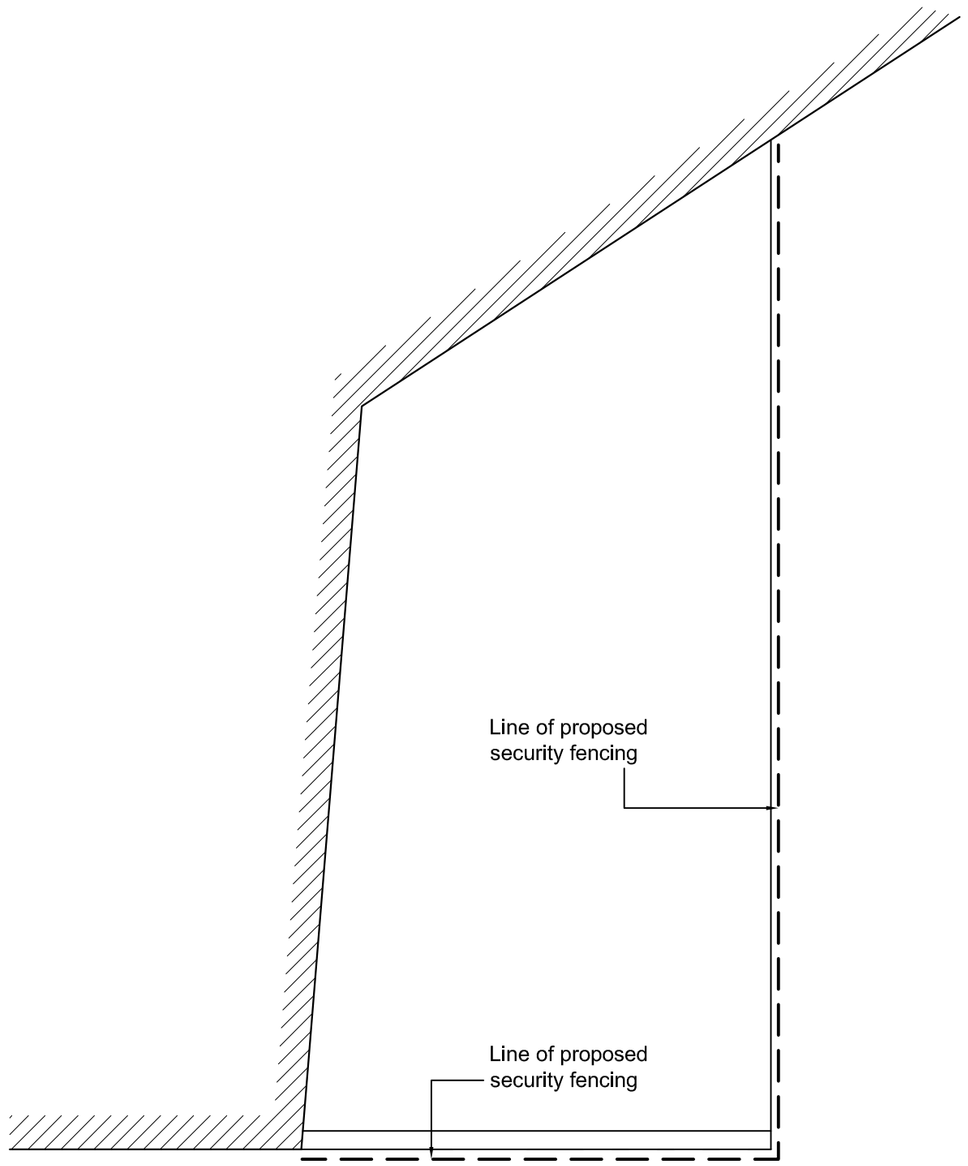



Existing Front Elevation
1:100

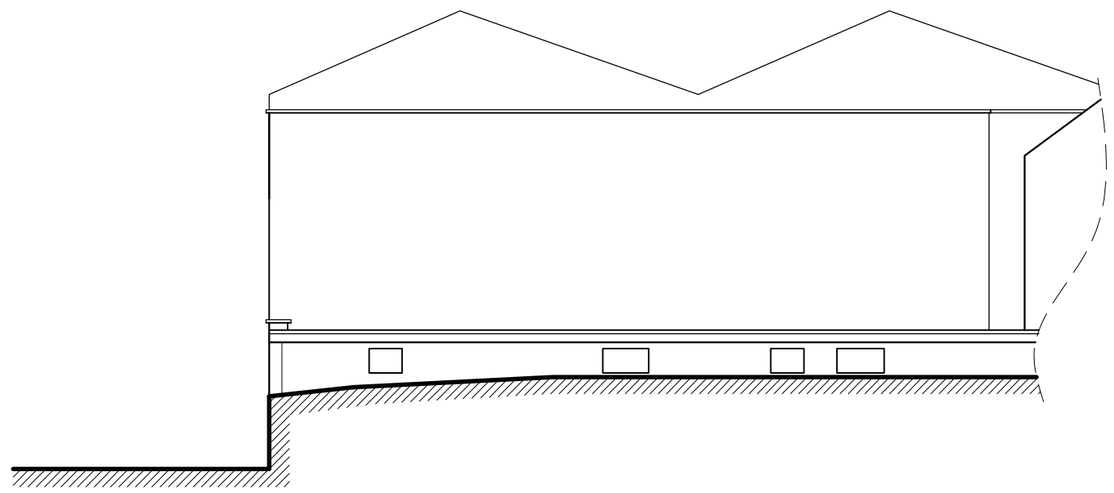

Existing Side Elevation
1:100



Proposed Front Elevation
1:100

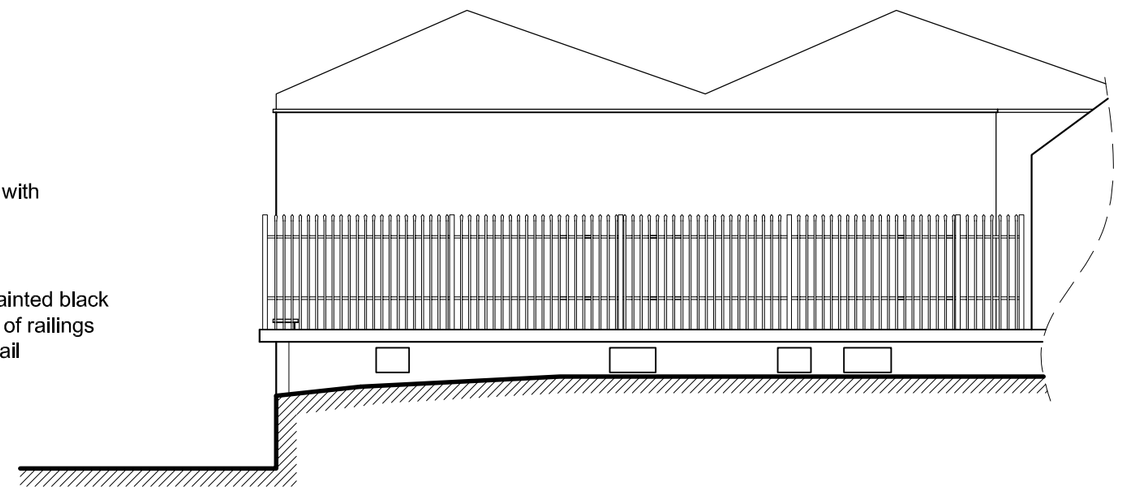

Proposed Side Elevation
1:100

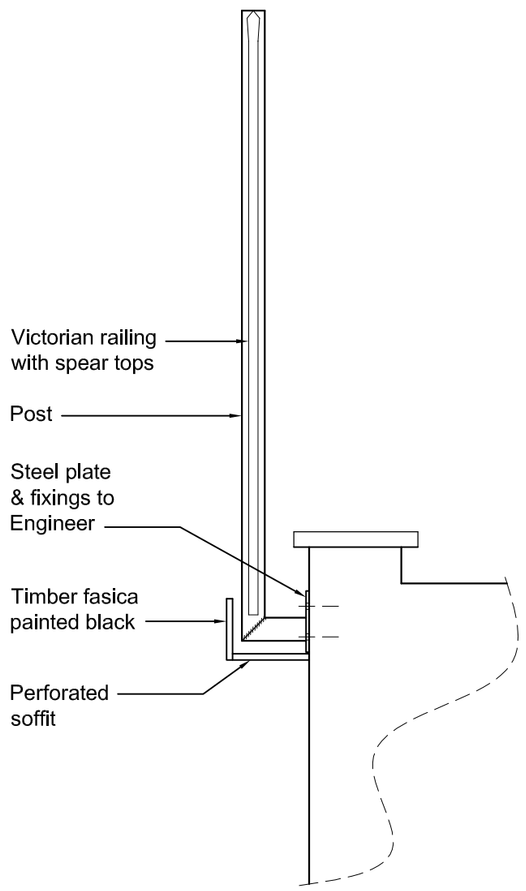

**Detail of Railing &
Proposed Fixing Method**
1:20

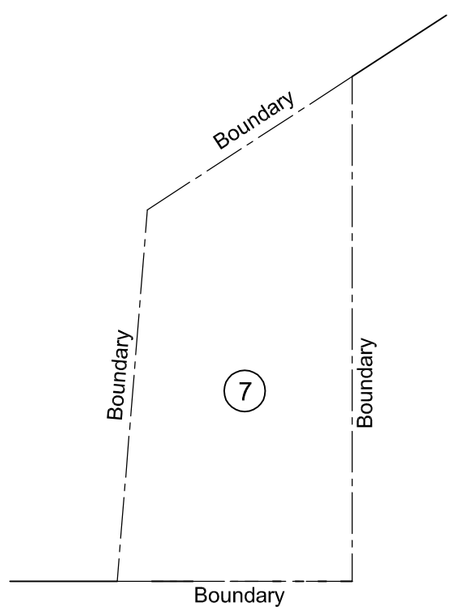

Site Plan
1:200

NOTES

1. This drawing is copyright and is the property of PROHAUS DESIGN LIMITED and is not to be copied or reproduced in whole or in part except under written agreement.
2. Do not scale this drawing. Any discrepancy to be reported immediately.
3. This drawing to be read in conjunction with all other relevant drawings and specifications associated with the project.
4. All dimensions and levels to be checked on site by the contractor prior to preparing any working drawings or commencing work on site.
5. The contractor must ensure and will be considered responsible for the overall stability of the building structure excavations etc. at all stages of the work.
6. All work by the contractor must be carried out in such a way that all requirements under the Health and Safety at work act are satisfied.
7. All work to be carried out in compliance with the requirements of all relevant Statutory Authorities and Regulations.

Rev B - Fencing Details Mod
& Fixing Detail - Jan 2021
Rev A - Fencing Details Added - Nov 2020

Client	Makin Dixon Solicitors
Project	Proposed Security Fencing 7 Church Lane, Rochdale
Drawing Title	Existing & Proposed Plan & Elevations

PROHAUS DESIGN
Architectural Design Services
25 Layton Park Avenue, Rawdon, Leeds, LS19 6PL
t | 0113 2506760 m | 07527 325915
e | info@prohausdesign.co.uk w | www.prohausdesign.co.uk

Project No.	2812	Drawn By	ARA
Drawing No.	01 Revision B	Date	Oct 2020
Scale	1:100	Checked	