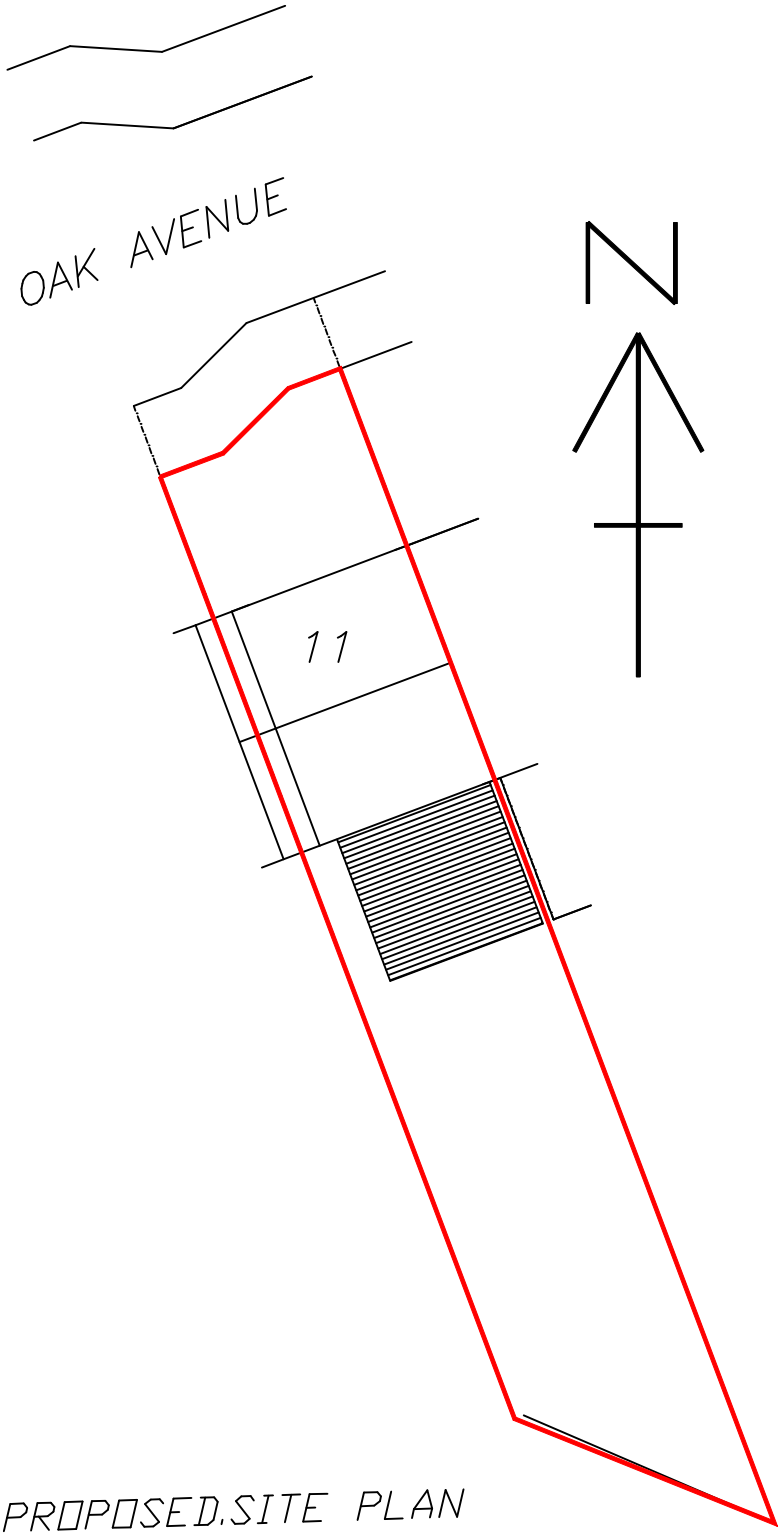

PROPOSED.SITE PLAN

PROPOSED KITCHEN EXTENSION AT 11,OAK AVENUE, ALKRINGTON, ROCHDALE MBC FOR MR.WES O'BRIAN 07581185929

SCALE:- 1.200 DATE:-AUG'18

les foey
BUILDING DESIGN CONSULTANTS

8,GLASSON WALK,
CHADDERTON,
OLDHAM,OL9 9DR
TEL&FAX: 0161-633-5057

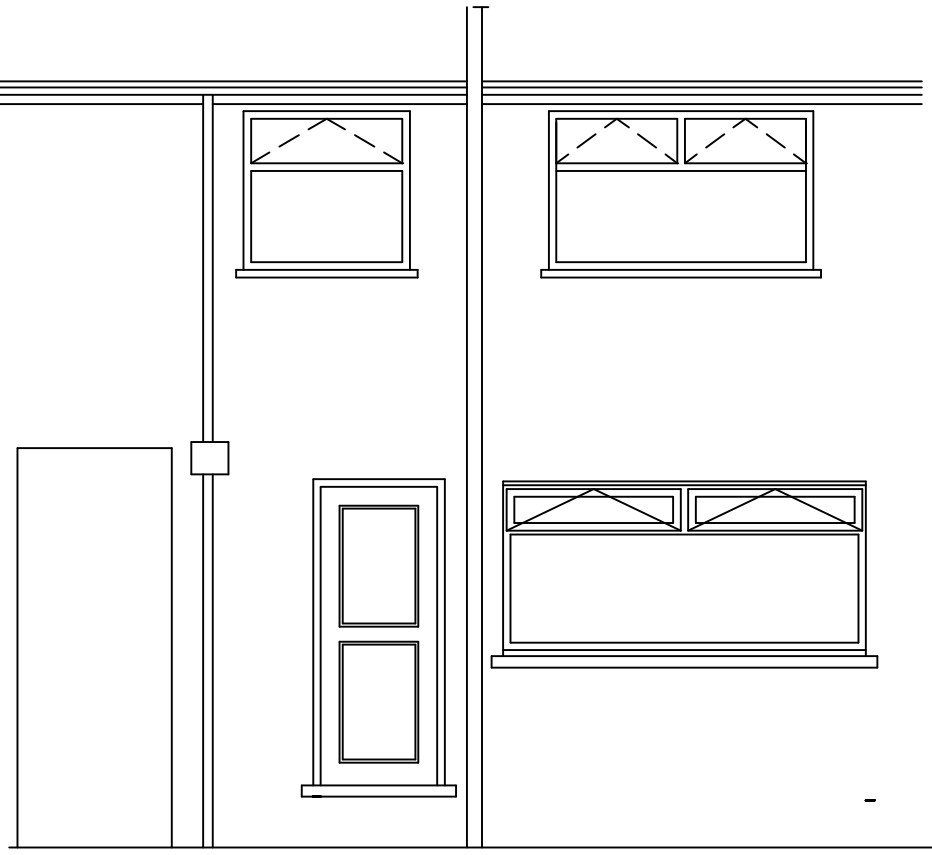

EXISTING REAR ELEV.

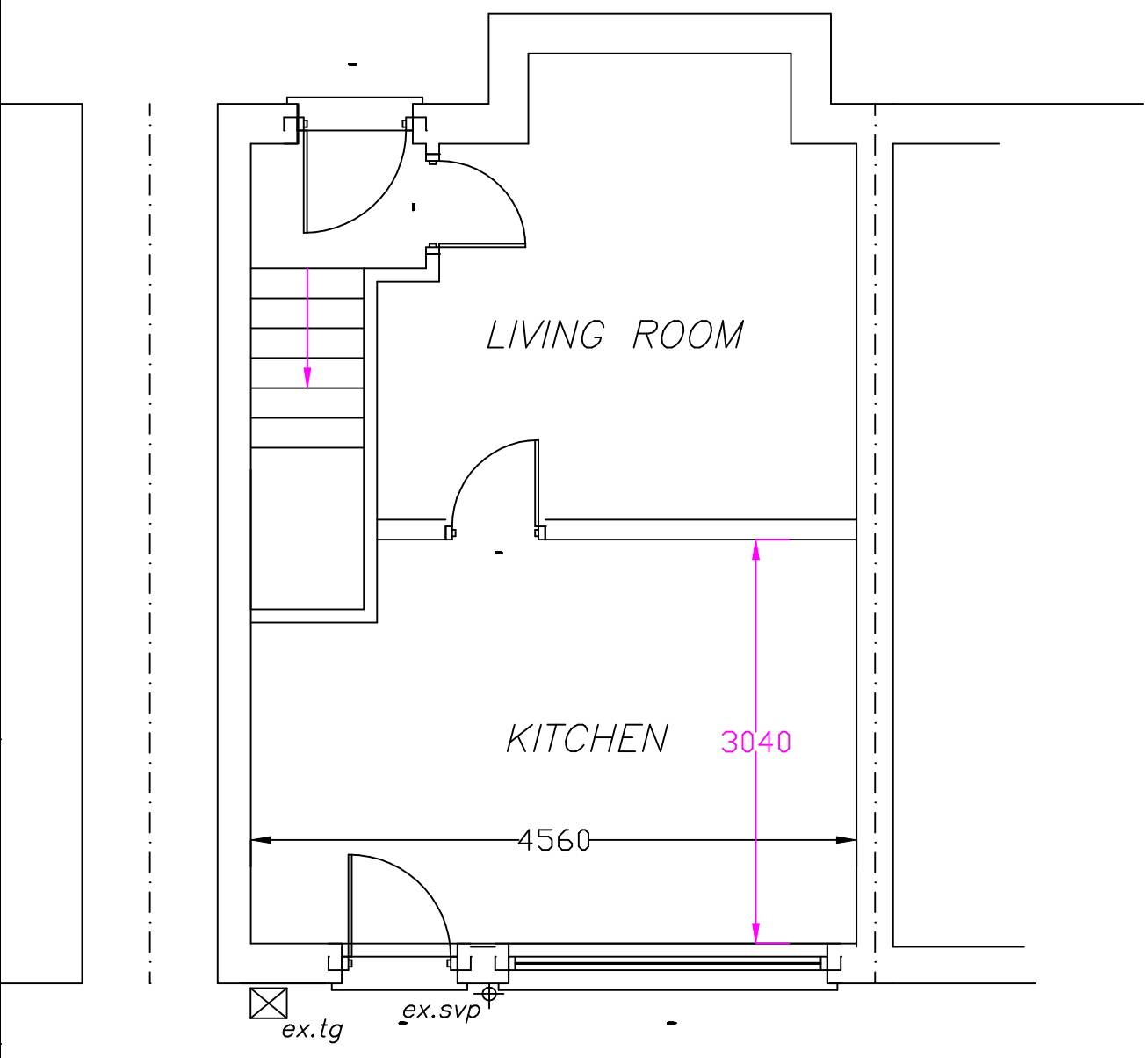

EX.GROUND FL. PLAN

NO WORK TO COMMENCE BEFORE PLANNING PERMISSION(IF REQUIRED)HAS BEEN GRANTED.
NO WORK TO COMMENCE UNTIL BUILDING REGULATIONS APPROVAL HAS BEEN GRANTED.
LES FOEY ACCEPTS NO RESPONSIBILITY FOR WORK UNDERTAKEN BEFORE BUILDING REGULATION APPROVAL OBTAINED.
ALL SIZES AND DIMENSIONS TO BE CHECKED AND VERIFIED BY THE CONTRACTOR BEFORE WORK COMMENCED
AND ANY DIFFERENCE TO THIS PLAN TO BE REPORTED TO LES FOEY BEFORE WORK COMMENCES.
IF THE WORK FALLS WITHIN THE PROVISIONS OF THE PARTY WALL ACT 1996 IT IS IMPORTANT THAT THE CLIENT
SERVES NOTICE TO THE OWNERS OF THE ADJOINING PROPERTY OF THE INTENTION TO BUILD TWO MONTHS BEFORE
THE COMMENCEMENT DATE AND THAT WRITTEN PERMISSION IS OBTAINED.ALL PROVISIONS OF THE PARTY WALL ACT 1966
(WHERE NECESSARRY TO BE ADHERED TO.

PROPOSED KITCHEN
EXTENSION AT
11,OAK AVENUE,
ALKRINGTON,
ROCHDALE MBC FOR
MR.WES O'BRIAN
07581185929

SCALE:- 1.50 DATE:-AUG'18

les foey
BUILDING
DESIGN CONSULTANTS

8,GLASSON WALK,
CHADDERTON,
OLDHAM,OL9 9DR
TEL&FAX: 0161-633-5057



PROPOSED REAR ELEV.

GENERAL NOTES
1. Vertical and horizontal dpc's to all cavity closures
2. Windows to open 1/20th room floor area
3. Steelwork to be 1/2 hour fire protected, encased in 20mm plasterboard and skim, 2mm wire binding at 100mm pitch
4. New brickwork to match and key into existing
5. Roof and floors to be tied down to walls with 30mm x 5mm ms straps at 2000mm ccs.
6. R.C. lintels over drains passing through walls
7. Any undersight drainage to be exposed and encased in 150mm pea gravel, flexible jointed and have rodding access provided to L.A. approval.
8. Brick infill between joists 25mm clearance from underside of roof
9. Foundations to regulation A1/A2
10.Exterior quality timber to facias
11.All cavities to be continuous
12.Air bricks ducted through wall cavity
13.Padstones to all steelwork
14.All plumbing to comply with B.S.5572
15.Cavity barriers (9mm masterboard or brick on edge
16.Foundations within 900mm of drains to be taken down to drain invert level
17.Depth of foundations to be taken to suitable sub-stratum irrespective of dimensions shown on drawing
18.Cross flow ventilation to be provided to roof space in accordance with B.S.5250 : 1989 clause 9.1

19.Trickle ventilators over double glazed windows 4000sq.mm(non-hab rooms)8000sq.mm(hab.rooms)
20.Mechanical ventilation to kitchen 60ltrs/sec or 30ltrs/sec if incorporated in cooker hood
21.Mechanical ventilation to bathroom and toilets 15ltrs/sec

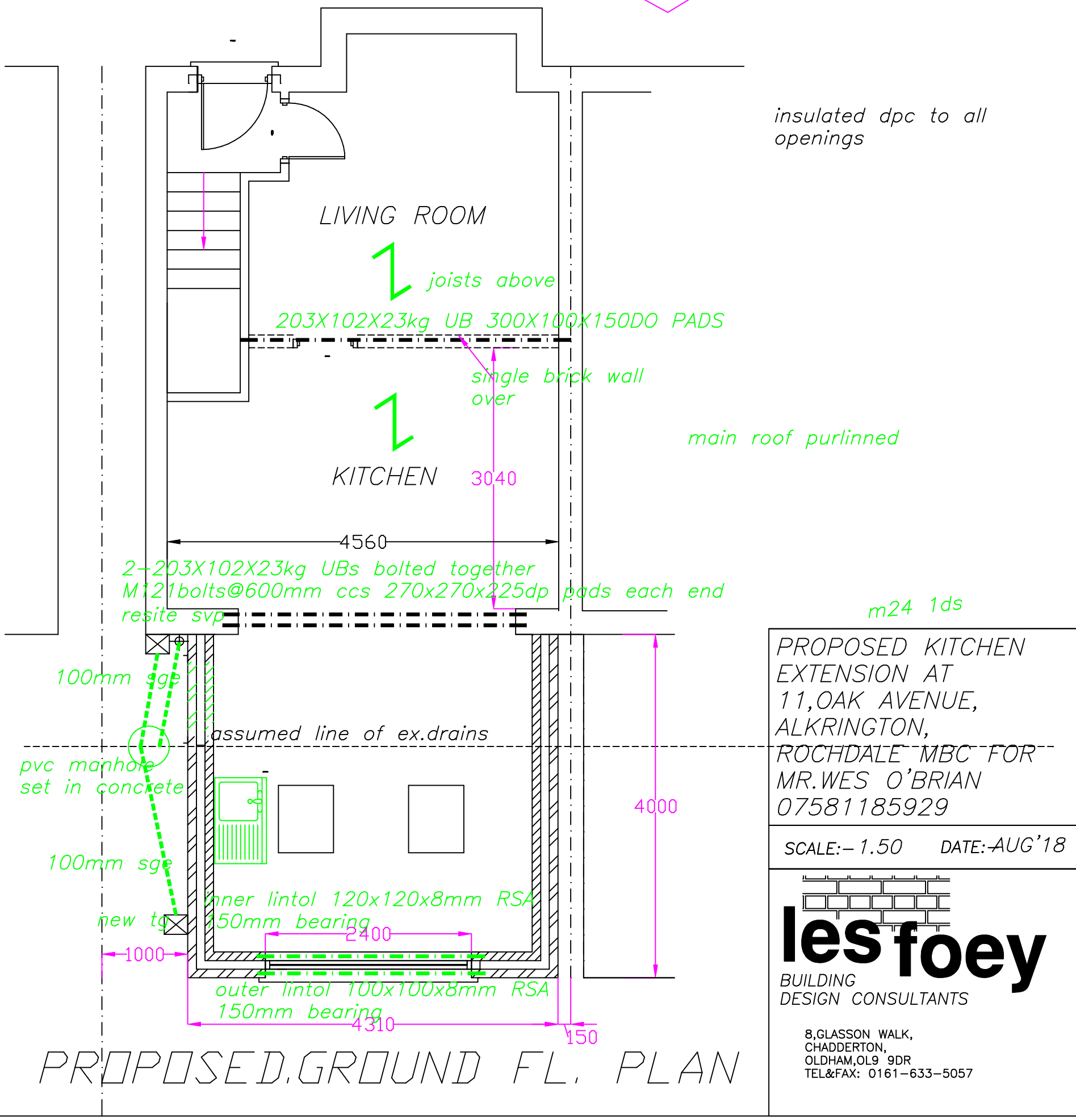

PROPOSED GROUND FL. PLAN

PROPOSED KITCHEN EXTENSION AT 11,OAK AVENUE, ALKRINGTON, ROCHDALE MBC FOR MR.WES O'BRIAN 07581185929

SCALE:- 1.50 DATE:-AUG'18

les foey
BUILDING DESIGN CONSULTANTS

8,GLASSON WALK,
CHADDERTON,
OLDHAM,OL9 9DR
TEL&FAX: 0161-633-5057

ALL DIMENSIONS TO BE VERIFIED AT SITE PRIOR TO COMMENCEMENT OF WORKS BY APPOINTED CONTRACTOR.ANY DISCREPANCY IN THE DRAWING MUST BE REPORTED TO LES FOEY.WRITTEN DIMENSIONS TO BE TAKEN IN PREFERENCE TO SCALED OFF DIMENSIONS.

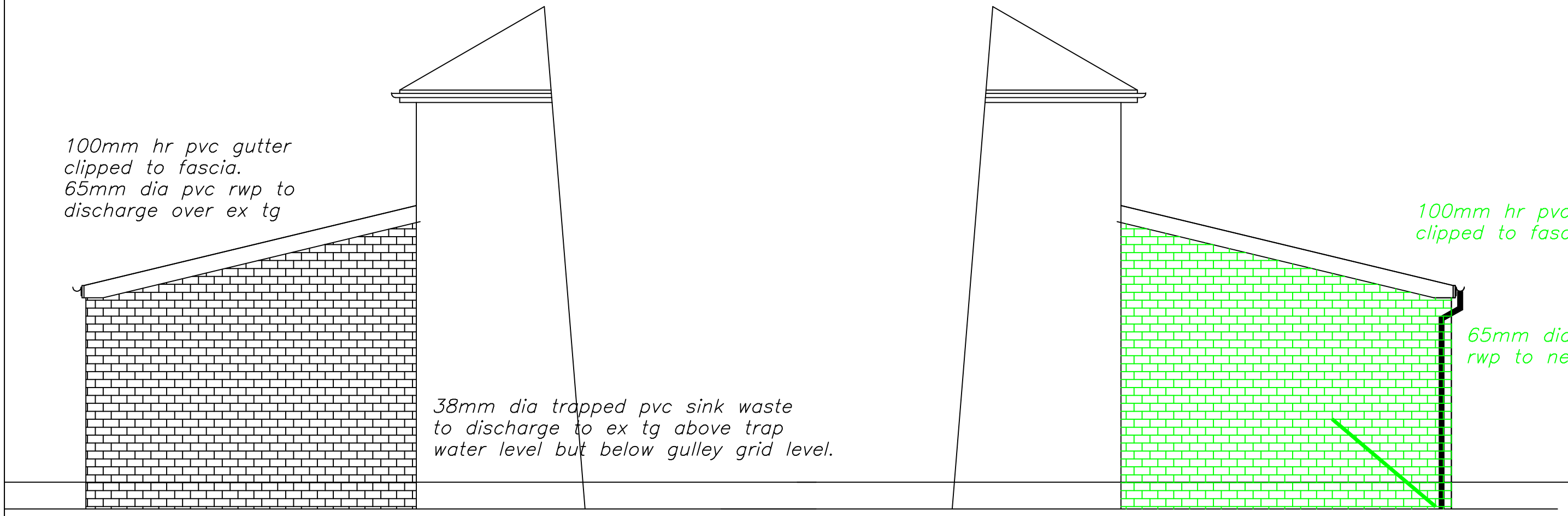

PROPOSED SIDE ELEV.

PROPOSED SIDE ELEV.

ROOF CONSTRUCTION
Tiles to L.A. approval on 25 x 50 mm sw timber battens
on sarking felt on 175x 50rafters@400MM CCS

100mm CELOTEX between rafters and further 35mm below rafters
u/s finished with 12.5mm plasterboard and skim. Roof to be provided with eaves ventilation equivalent to a 25mm continuous strip
both sides.

GROUND FLOOR CONSTRUCTION
150mm concrete on 100mm flooring grade polystyrene insulation
on 1200g visquene membrane on
sandblinded well consolidated hardcore.

WALL CONSTRUCTION
275mm cavity wall comprising 100mm facing bricks
to L.A. approval, 75mm(dritherm filled) cavity and 100mm celcon
walling blocks with stainless steel wall ties. Inside plastered and skimmed
(13mm lightweight plaster) (brickwork only below dpc).
Wall ties to BS.1243 : 1972 (1981 amended) placed at
900mm horizontally and 450mm vertically and every
300mm of height adjacent to openings.

NO WORK TO COMMENCE BEFORE PLANNING PERMISSION(IF REQUIRED)HAS BEEN GRANTED.
NO WORK TO COMMENCE UNTIL BUILDING REGULATIONS APPROVAL HAS BEEN GRANTED.
LES FOEY ACCEPTS NO RESPONSIBILITY FOR WORK UNDERTAKEN BEFORE BUILDING REGULATION APPROVAL OBTAINED.
ALL SIZES AND DIMENSIONS TO BE CHECKED AND VERIFIED BY THE CONTRACTOR BEFORE WORK COMMENCED
AND ANY DIFFERENCE TO THIS PLAN TO BE REPORTED TO LES FOEY BEFORE WORK COMMENCES.
IF THE WORK FALLS WITHIN THE PROVISIONS OF THE PARTY WALL ACT 1996 IT IS IMPORTANT THAT THE CLIENT SERVES NOTICE TO THE OWNERS OF THE ADJOINING PROPERTY OF THE INTENTION TO BUILD TWO MONTHS BEFORE THE COMMENCEMENT DATE AND THAT WRITTEN PERMISSION IS OBTAINED.ALL PROVISIONS OF THE PARTY WALL ACT 1966 AUTHORISED DEVIATIONS FROM THIS DRAWING MUST BE REPORTED TO LES FOEY.WRITTEN DIMENSIONS TO BE TAKEN IN PREFERENCE TO SCALED OFF DIMENSIONS.
ALL DIMENSIONS TO BE VERIFIED AT SITE PRIOR TO COMMENCEMENT OF WORKS BY APPOINTED CONTRACTOR AND ANY DISCREPANCY TO BE REPORTED TO LES FOEY.

PROPOSED KITCHEN EXTENSION AT
11,OAK AVENUE,
ALKRINGTON,
ROCHDALE MBC FOR
MR.WES O'BRIAN
07581185929

SCALE:- 1.50 DATE:-AUG'18

les foey
BUILDING
DESIGN CONSULTANTS

8,GLASSON WALK,
CHADDERTON,
OLDHAM,OL9 9DR
TEL&FAX: 0161-633-5057

ALL DIMENSIONS TO BE VERIFIED AT SITE PRIOR TO COMMENCEMENT OF WORKS BY APPOINTED CONTRACTOR.ANY DISCREPANCY IN THE DRAWING MUST BE REPORTED TO LES FOEY.WRITTEN DIMENSIONS TO BE TAKEN IN PREFERENCE TO SCALED OFF DIMENSIONS.

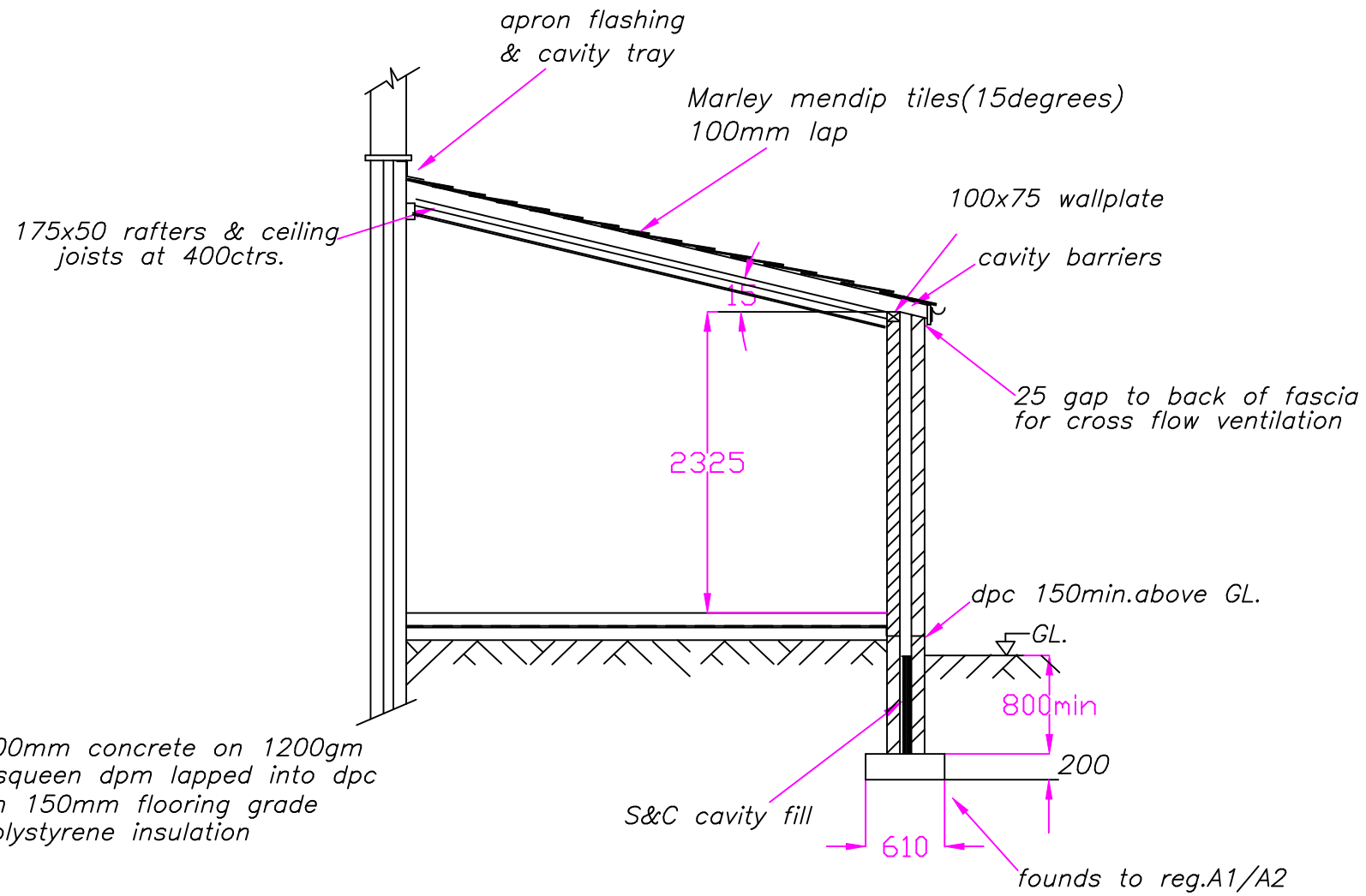

SECTION "A–A"

ELECTRICAL SPECIFICATION
THE INSTALLATION WILL BE DESIGNED,INSTALLED,INSPECTED AND TESTED TO THE STANDARDS REQUIRED BY PART'P' OF THE BUILDING REGULATIONS.
A'COMPETANT' ELECTRICIAN WILL UNDERTAKE THE WORK AND AN INSTALLATION CERTIFICATE WILL BE PROVIDED.
PRIOR TO COMMISSIONING THE INSTALLATION WILL BE TESTED BY AN ELECTRICIAN COMPETANT IN TESTING HOLDING A SUITABLE QUALIFICATION.
TESTING WILL BE COMPREHENSIVE WITH TESTS FOR CONTINUITY,AND EARTH LOOP IMPEDANCE.
ANY INSTALLATION UNDERTAKEN BY SOMEONE WHO IS NOT REGISTERED WITH NICEIC OR ECA MUST PROVIDE AN INSTALLATION CERTIFICATE TOGETHER WITH A TEST CERTIFICATE PREPARED BY A MEMBER OF THE NICEIC OR ECA.
THE PROPOSED DOMESTIC ELECTRICAL INSTALLATION WILL BE INSTALLED IN ACCORDANCE WITH BS 7671 AND THE CURRENT 16th EDITION OF THE WIRING REGULATIONS.
THE BEST PRACTISE ENDORSED WITH THE IEE ON SITE GUIDE WILL BE APPLIED.

NEW DOUBLE GLAZED WINDOWS TO HAVE INNER PANE OF 'K' GLASS AND MINIMUM GAP BETWEEN PANES 16mm.
NEW BEDROOM WINDOWS TO HAVE ESCAPE WINDOW 0.33M2 WITH MINIMUM WIDTH OF ESCAPE WINDOW 450mmx730mm height.
BEAM OVER NEW EXTERNAL WINDOWS AND DOORS CATNIC COMBINED LINTOLS.
NEW GLAZING IN CRITICAL LOCATIONS TO COMPRISE TOUGHENED SAFETY GLASS TO BS6206

1) AREAS WITH DIFFERING HEATING NEEDS SUCH AS SEPARATE SLEEPING AND LIVING AREAS SHOULD HAVE INDIVIDUAL TEMPERATURE CONTROL–BY USE OF ROOM THERMOSTATS OR INDIVIDUAL RADIATOR VALVES.
2)SEPARATE TIMING CONTROLS SHOULD BE PROVIDED FOR SPACE HEATING AND HOT WATER(EXCEPT FOR COMBINATION BOILERS AND SOLID FUEL APPLIANCES.
3)BOILER CONTROLS MUST INCLUDE PROVISION TO PREVENT THE BOILER OPERATION WHEN NEITHER THE SPACE HEATING SYSTEM NOR THE HOT WATER SYSTEM REQUIRES HEAT.
4)THE NEW BOILER SHOULD HAVE A SEDBUCK RATING OF 86%
5)ALL HEATING AND HOT WATER SYSTEMS NEED TO BE FULLY COMMISSIONED AND CERTIFICATION PROVIDED.
6)INSTRUCTIONS FOR ALL RELEVANT CONTROLS ARE TO BE GIVEN TO THE OWNER.

1/3 OF NEW LIGHT FITTINGS TO BE OF THE TYPE THAT WILL ONLY ACCEPT ENERGY EFFICIENT LAMPS

NEW ELECTRICAL SWITCHES AND SOCKETS TO BE LOCATED WITJIN A ZONE BETWEEN 450mm & 1200mm FROM THE FINISHED FLOOR LEVEL..

ROBUST METHODS OF CONSTRUCTION TO BE ADOPTED.

INSULATED DPCS TO BE USED ON WINDOW AND DOOR REVEALS.

PROPOSED KITCHEN EXTENSION AT 11,OAK AVENUE, ALKRINGTON, ROCHDALE MBC FOR MR.WES O'BRIAN 07581185929

SCALE:–1.50 DATE:-AUG'18

NO WORK TO COMMENCE BEFORE PLANNING PERMISSION(IF REQUIRED)HAS BEEN GRANTED.
NO WORK TO COMMENCE UNTIL BUILDING REGULATIONS APPROVAL HAS BEEN GRANTED.
LES FOEY ACCEPTS NO RESPONSIBILITY FOR WORK UNDERTAKEN BEFORE BUILDING REGULATION APPROVAL OBTAINED.
ALL SIZES AND DIMENSIONS TO BE CHECKED AND VERIFIED BY THE CONTRACTOR BEFORE WORK COMMENCED AND ANY DIFFERENCE TO THIS PLAN TO BE REPORTED TO LES FOEY BEFORE WORK COMMENCES.
IF THE WORK FALLS WITHIN THE PROVISIONS OF THE PARTY WALL ACT 1996 IT IS IMPORTANT THAT THE CLIENT SERVES NOTICE TO THE OWNERS OF THE ADJOINING PROPERTY OF THE INTENTION TO BUILD TWO MONTHS BEFORE THE COMMENCEMENT DATE AND THAT WRITTEN PERMISSION IS OBTAINED.ALL PROVISIONS OF THE PARTY WALL ACT 1966 (WHERE NECESSARRY TO BE ADHERED TO.

les foey
BUILDING
DESIGN CONSULTANTS

8,GLASSON WALK,
CHADDERTON,
OLDHAM,OL9 9DR
TEL&FAX: 0161–633–5057