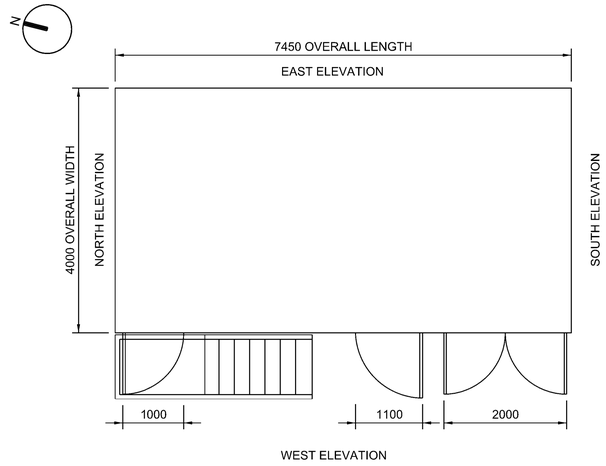

PLAN VIEW
1:50

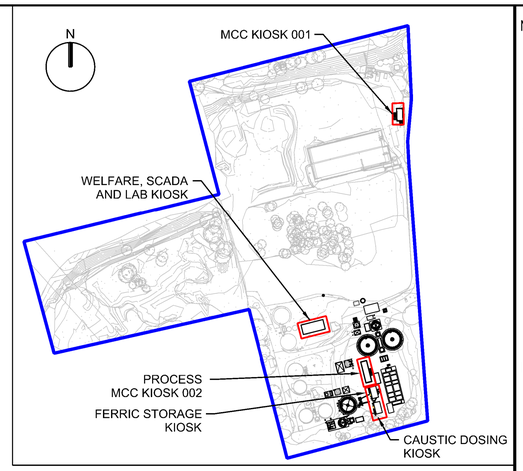

KEY PLAN
1:2000

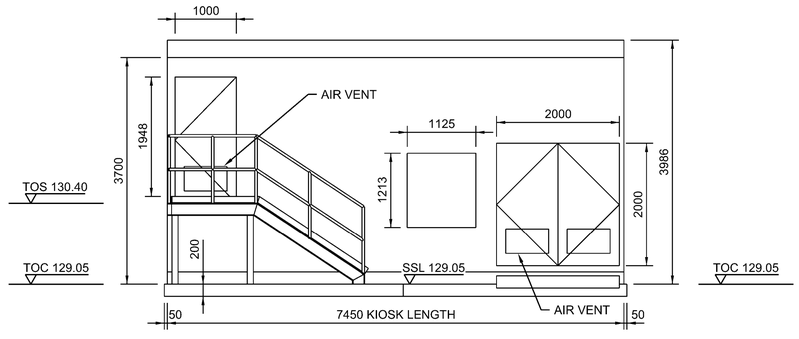

WEST ELEVATION
1:50

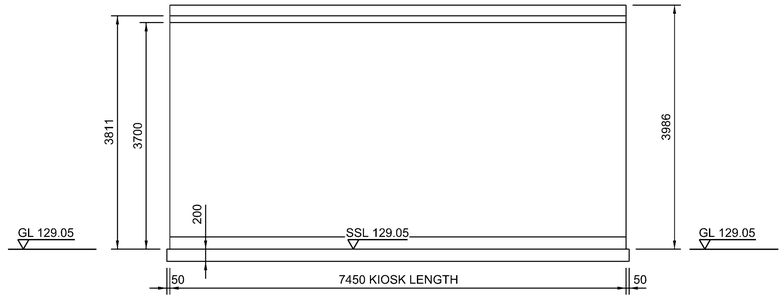

EAST ELEVATION
1:50

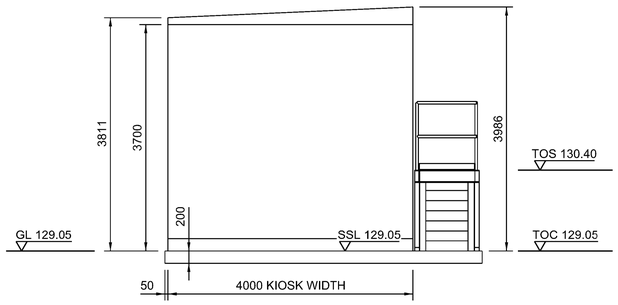

NORTH ELEVATION
1:50

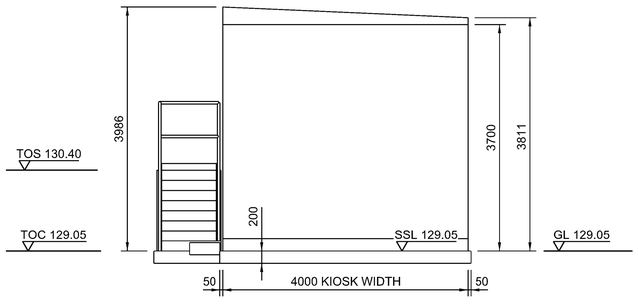

SOUTH ELEVATION
1:50

0 1 2 3 4 5
SCALE 1:50 (A1)
SCALE 1:100 (A3)
METRES

0 50 100 200
SCALE 1:2,000 (A1)
SCALE 1:4,000 (A3)
METRES

NOTES

1. ALL DIMENSIONS IN MILLIMETRES AND ALL LEVELS IN METRES AOD UNLESS NOTED OTHERWISE.
2. KIOSK MATERIAL TYPE, GRP, COLOURED A DARK RECESSIVE GREEN (14c39).
3. GALVANISED STEEL ACCESS STAIRS AND PLATFORM, NATURAL FINISH.
4. MODULAR BUILDING TO BE FIXED TO GALVANISED STEEL PLATFORM.
5. 25mm CHAMFER TO ALL EXPOSED ARRISES.

LEGEND

	RED LINE BOUNDARY - 48,185 m²
	LAND WITHIN UNITED UTILITIES OWNERSHIP
	AREA REQUIRED FOR PLANNING PERMISSION - 645 m²
GL	GROUND LEVEL
SSL	STRUCTURAL SLAB LEVEL
TOS	TOP OF STEEL
TOC	TOP OF CONCRETE

REFERENCE DRAWINGS

1. 80061379-01-C2V-CSTLT-97-DR-I-00006 PLANNING APPLICATION - SITE LAYOUT PLAN
2. 80061379-01-C2V-CSTLT-97-DR-I-00007 PLANNING APPLICATION - SITE LOCATION PLAN - SHEET 1 OF 2
3. 80061379-01-C2V-CSTLT-97-DR-I-00008 PLANNING APPLICATION - MCC KIOSK 001 - PLAN AND ELEVATIONS
4. 80061379-01-C2V-CSTLT-97-DR-I-00010 PLANNING APPLICATION - PROCESS MCC KIOSK 002 - PLAN AND ELEVATIONS
5. 80061379-01-C2V-CSTLT-97-DR-I-00011 PLANNING APPLICATION - CAUSTIC DOSING KIOSK - PLAN AND ELEVATIONS
6. 80061379-01-C2V-CSTLT-97-DR-I-00012 PLANNING APPLICATION - WELFARE, SCADA AND LAB KIOSK - PLAN AND ELEVATIONS
7. 80061379-01-C2V-CSTLT-97-DR-I-00013 PLANNING APPLICATION - SITE LOCATION PLAN - SHEET 2 OF 2
8. 80061379-01-C2V-CSTLT-99-DR-L-00003 LANDSCAPE AND BIODIVERSITY PROPOSAL

CURRENT ISSUE INFORMATION

VERSION	AUTH	CHKD	REVD	REASON FOR ISSUE	DATE
P03	RW	PC	MH	Work In Progress (WIP)	13/04/21
S2				Issued for Information	

SUITABILITY CODE	SUITABILITY DESCRIPTION

United Utilities
Water for the North West

C2V+

CASTLETON WwTW – WFD – AMP7

PLANNING APPLICATION

FERRIC STORAGE KIOSK

PLAN AND ELEVATIONS

SCALE	SHEET SIZE
AS SHOWN	A1
DRAWING NUMBER	REVISION
80061379-01-C2V-CSTLT-97-DR-I-00009	P03

© The copyright of this document, which contains information of a proprietary nature, is vested in United Utilities Water Limited. The content of this document may not be used for purposes other than that for which it has been supplied and may not be reproduced, either wholly or in part, in any way whatsoever. It may not be used by, or its contents divulged to any other person whatsoever without the prior written permission of United Utilities Water Limited.
Copyright Acknowledgement: Use of Ordnance Survey map data sanctioned by the controller of H.M. Stationery Office. OS Licence Number 100019326. Crown copyright reserved. Unauthorised production infringes copyright