DRAWING No	REVISION	SHEET SIZE	SHEET No
ASM4	A	A4	1 of 1

UNIVERSAL FRONT / REAR AND 1 SIDE
83BAF70979

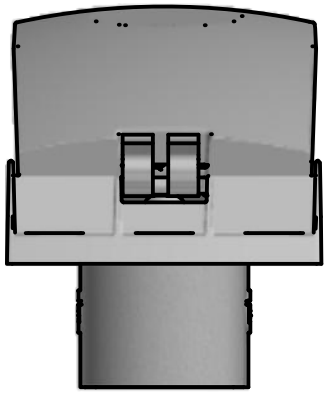

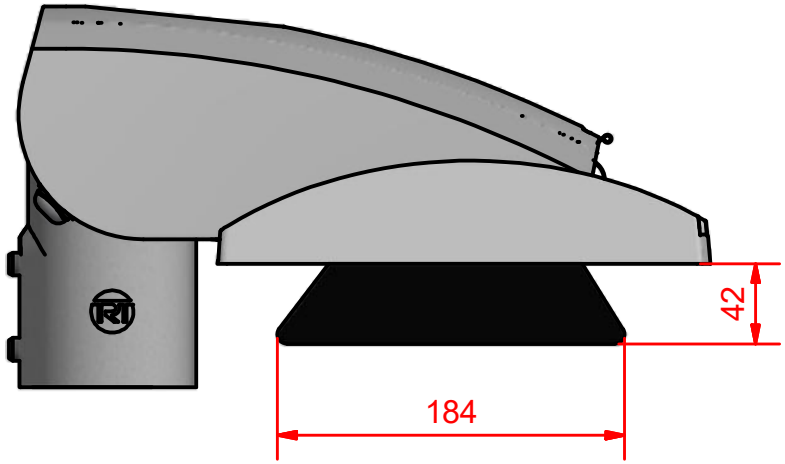

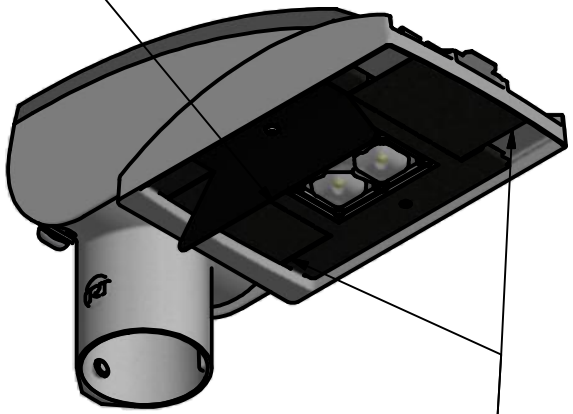

FRONT AND REAR SHIELDS
BEND AS REQUIRED

© The contents of this document belong to FW Thorpe PLC. Reproduction in whole or part of the article shown may only be made with prior written permission.

MATERIAL ALUMINIUM 1.0 THICK	TRTLIGHTING ROAD & TUNNEL SYSTEMS A division of FW Thorpe Plc		FIRST ANGLE	SCALE - SEE DRAWING VIEWS	DO NOT SCALE / CHECKED
			UNITS - mm	GENERAL TOLERANCE	LIN mm / ANG deg
FINISH POLYESTER POWDER COAT LOW GLOSS BLACK	DRAWN BY Stuart.wilson	CREATION DATE 06/10/2016	PROJECT No	DESCRIPTION BAFFLE ASPECT MINI	PRODUCT RANGE : ASPECT
LATEST REVISION DETAILS	REVISED BY	REVISION DATE	DRAWING No	ASM4	REVISION A