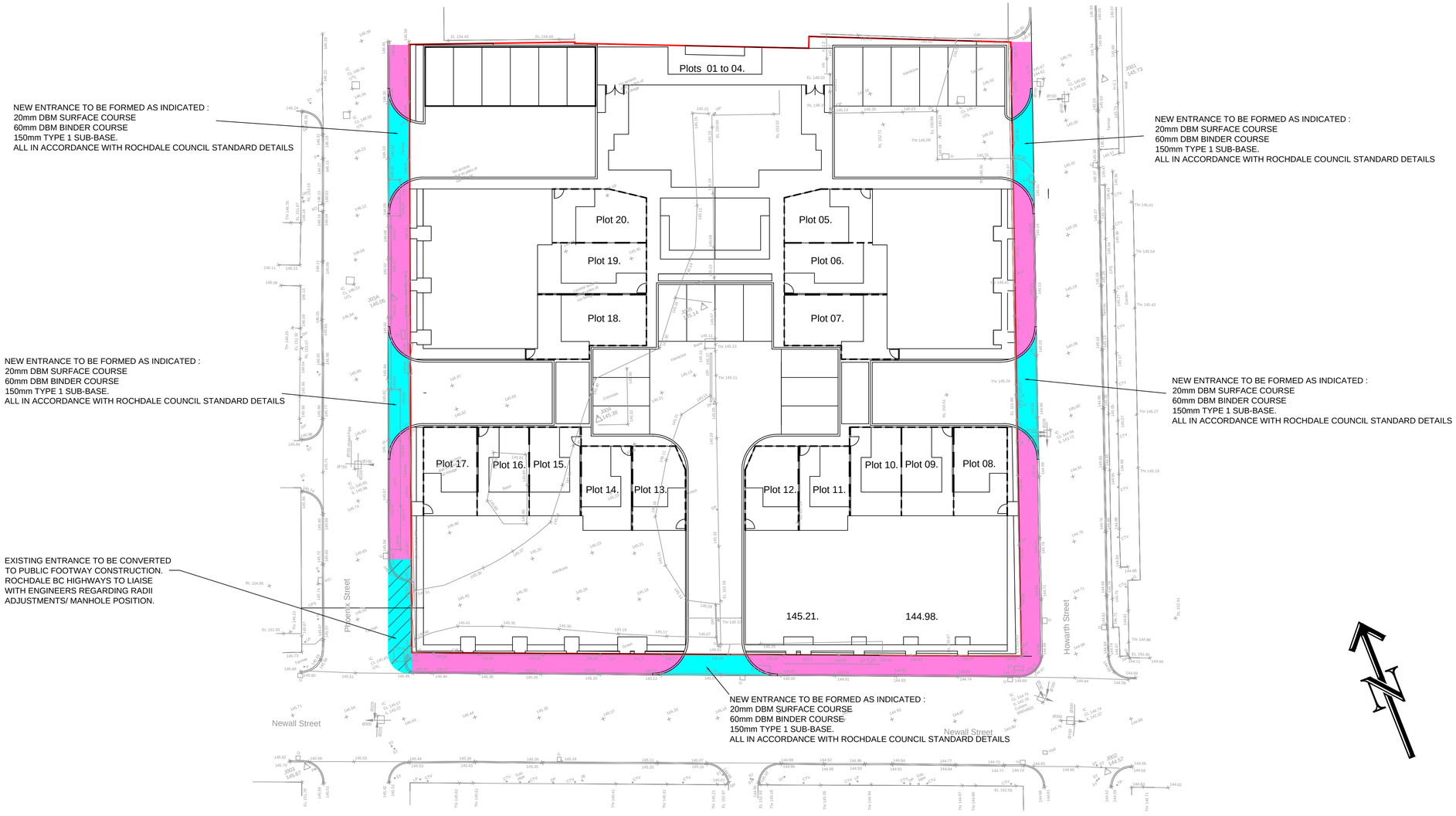

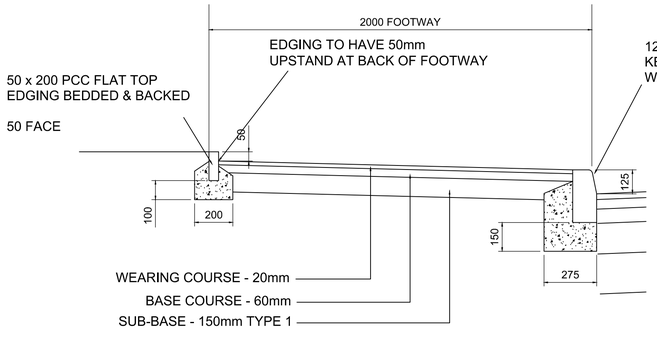

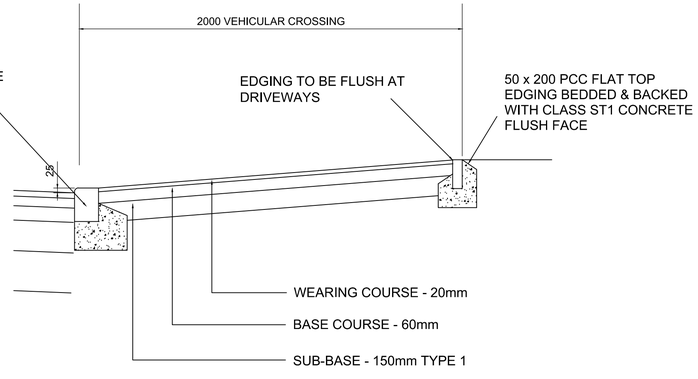

FOOTWAY SPECIFICATION

WEARING COURSE TO BE 6mm NOMINAL AGGREGATE
(EXCLUDING LIMESTONE) DENSE GRADED BITUMEN
MACADAM TO BS 4987-1-2001

BASE COURSE TO BE 20mm NOMINAL AGGREGATE
DENSE BITUMEN MACADAM TO TABLES 15 - 16 BS 4987-1-2001
& CLAUSE 6.5 & CLAUSE 906 OF THE HIGHWAY SPECIFICATION

TYPICAL CROSS SECTION THROUGH FOOTWAY

TYPICAL CROSS SECTION VEHICULAR CROSSING

NOTES

DO NOT SCALE OFF THIS DRAWING
IF IN DOUBT - ASK

LEGEND.

= EXTENT OF S278 WORKS

= EXTENT OF FOOTWAY REPAIRS IN CONNECTION WITH S278 WORKS

= EXTENT OF NEW OR RECONSTRUCTED FOOTWAY

= SITE BOUNDARY

FK = FULL KERB
DK = DROPPED KERB
TK = TRANSITION KERB

REV.	DATE	DESCRIPTION
C	29/07/20	FOOTWAY REPAIRS ADDED.
B	20/12/19	EXISTING ENTRANCE/ NEW FOOTWAY ADDED.
A	29/11/19	ISSUED FOR TENDER.

CLIENT

CASEY GROUP

Carley Daines and Partners Limited
Consulting Civil and Structural Engineers

11 Bridgewater Road Walkden
Worsley Manchester M28 3JE
Tel 0161 799 2720 Fax 0161 790 3474
E-mail mail@carleydaines.co.uk

TITLE

HOWARTH STREET
ROCHDALE

S278 DRAWING

Drawn	M.HOLE	Checked	A.MULLIGAN
Date	NOVEMBER 2019	Date	NOVEMBER 2019

Scale 1:200 @ A1

Drawing No. 19.B.12396/10 C