CROWN OPTO S4

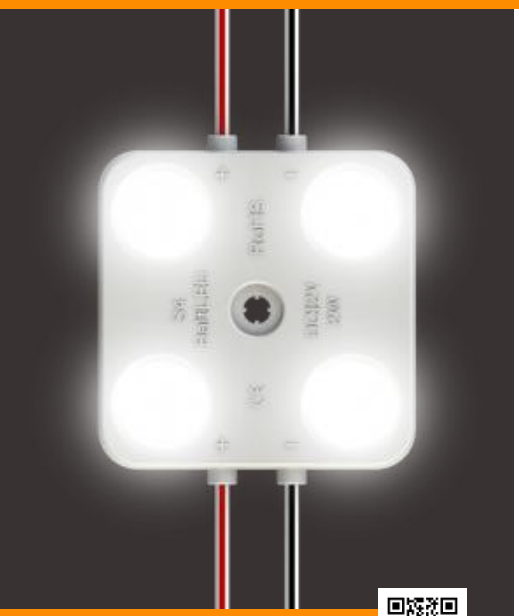

ITEM DESCRIPTION

In front of you – technical information of our newest addition to Crown OPTO S family – Crown OPTO S4. Observing your fascinating interest with S family we have decided to extend the product line and provide you with modules for bigger depths as swell. This is how S3 and S4 has emerged. With great lumen output up to 105 lm/W, impressive distance between the modules, S4 should be considered when you want to illuminate boxes or letters of bigger depths and need more brightness.

APPLICATION

- Channel letters signs and light boxes
- Recommended depth 140 – 300 mm

FEATURES & BENEFITS

- Efficiency up to 105 lm/W
- IP67 protection class
- White, red, green and blue colours are available
- 5 year warranty

GENERAL SPECIFICATIONS

SUPPLY VOLTAGE	12 VDC
POWER	1.6; 2 W
RECOMMENDED DEPTH	From 140 to 300 mm
CC DISTANCE	340 mm
BINNING	3 SDCM
OPERATING TEMPERATURE	-30 °C ~ +50 °C
STORAGE TEMPERATURE	-40 °C ~ +70 °C
STORAGE CONDITIONS	Relative humidity <60%
LIFETIME	L70 50,000 h
WARRANTY	5 years (24/7)*

*Warranty is applied only and if storage, mounting and maintenance conditions, stated in the installation guide, are followed.

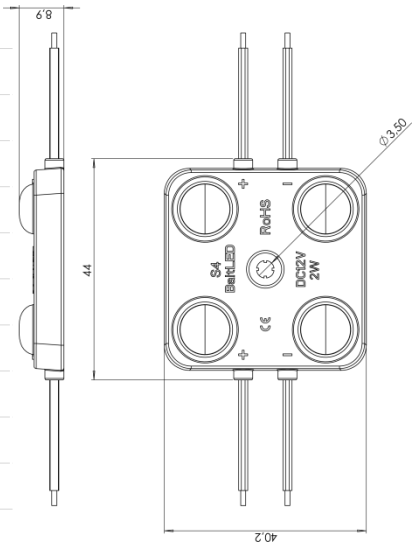

* Dimensions are in mm

LIGHT DISTRIBUTION GRAPH

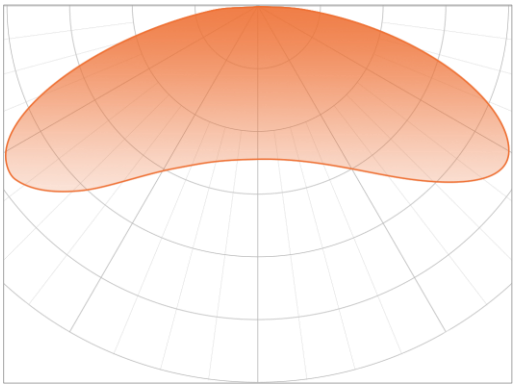

Beam angle: 160°

ORDERING INFORMATION

SKU	POWER, W	LUMEN OUTPUT, LM	COLOUR	STATUS
BMP-S4-04UH160CW652	2	210	6500 K	IN STOCK
BMP-S4-04UH160RC	1,6	69	red	PRE-ORDER**
BMP-S4-04UH160GC	2	134	green	PRE-ORDER**
BMP-S4-04UH160BC	2	36	blue	PRE-ORDER**

* Pre-order products will be available only with MOQ from 3000 EUR, lead time 3 – 8 weeks, for 5000 K – up to 12 weeks.
For precise lead time, contact your Customer Service manager.

CHAIN		BAG		BOX	
20 pcs	(net weight: 0.453 kg)	60 pcs	(net weight: 1.300 kg)	420 pcs	(net weight: 10.000 kg)

© 2018, All rights reserved BaltLED, UAB. Specifications are subject to change without notice.