Copyright of this drawing is owned by Whittaker Design

NOTES

All dimensions to be checked on site and any discrepancies notified prior to commencement of work.

Do not scale from this drawing - If in any doubt, ask.

REVISIONS

Date	Ref.	By

WINDOW DETAIL

SCALE 1:100

0 1 2 3 4 5 6 7 8 9 10m

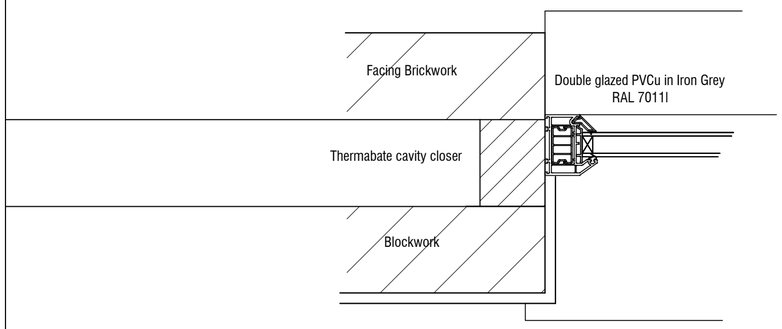

JAMB DETAIL

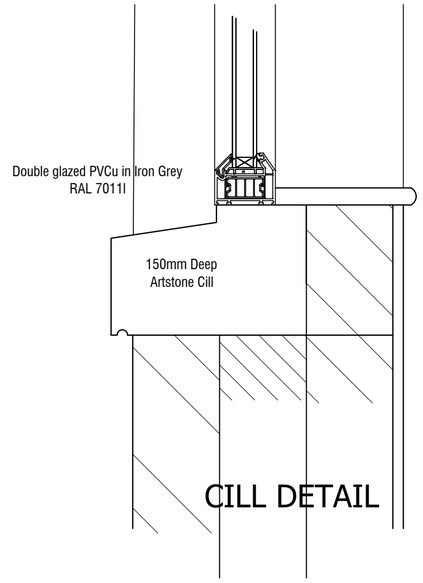

CILL DETAIL

DOOR DETAIL

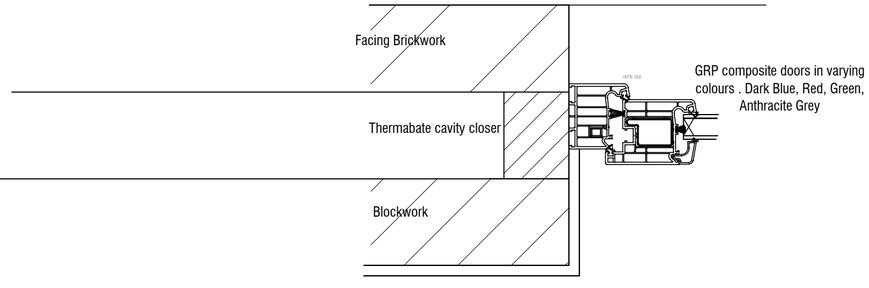

JAMB DETAIL

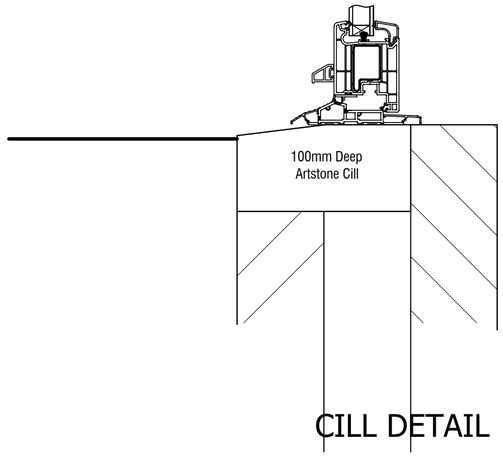

CILL DETAIL

Whittaker Design
ARCHITECTURAL & INTERIOR DESIGNERS
169 St. JOHN STREET
LEES
OLDHAM OL4 3DS
T: 0161 620 1438
F: 0161 620 1439
E: INFO@WHITTAKERDESIGN.CO.UK
W: WWW.WHITTAKERDESIGN.CO.UK

PROJECT

Quantum Star Ltd

Land At Spring Inn

Broad Lane

Rochdale

DRAWING TITLE

Window & Door Detail

SCALE 1:5 @ A2 **DATE** Dec 20

DRAWN A Doherty **CHECKED**

NUMBER **REVISION**

3433 Detail