TheWorks.co.uk

Rochdale Riverside // June 2020

onesign &DIGITAL

D86 Princesway North
Team Valley Trading Estate
Gateshead
NE11 0TU

0191 487 67 67
david@onesignanddigital.com
www.onesignanddigital.com

D86 Princesway North Team Valley Trading Est Gateshead Tyne & Wear NE11 0TU
Tel (0191) 4876767 Email sales@onesignanddigital.com



A Entrance Panel

A 2.5mm folded aluminium fascia panels with 80mm returns.
Powder coated BS10E53 Yellow. Main logo panels to be aperture cut to read 'theworks.co.uk' studded to the rear and backed off with 3mm LED opale panel with a 5mm push through 050 letters

Size : 400 x 800mm **Scale :** 1:20 printed at A3

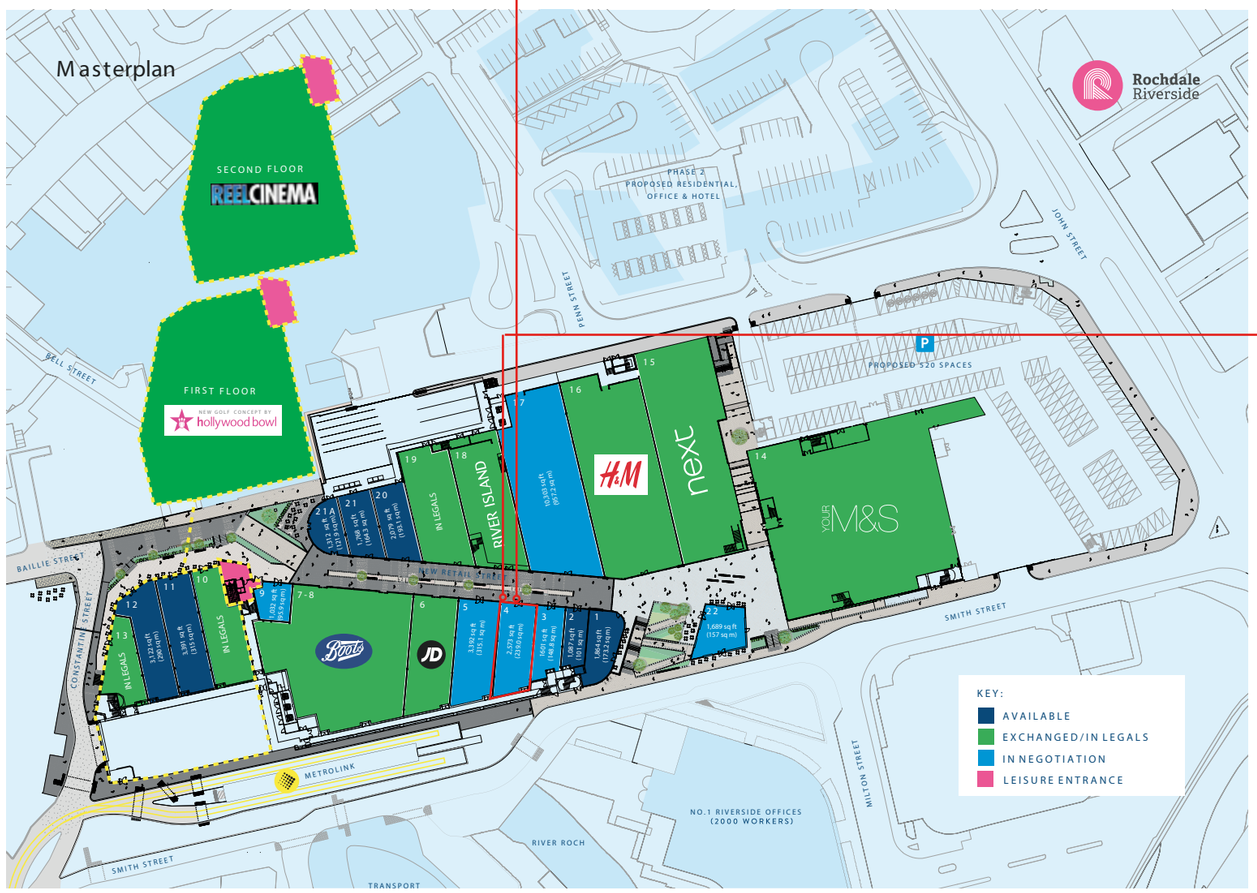

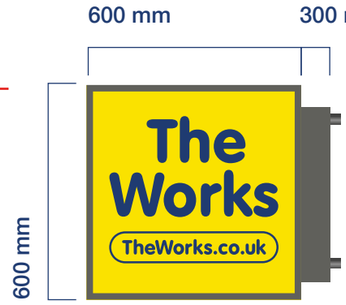

C Projecting Sign

Printed opal acrlic Panel fitted into existing Aluminium Projecting sign as per shopping centre standards,

Size: 600 x 600 mm

Client Information

We require vector graphics (lines and curves with fonts broken apoart) for cutting/manufacturing or high resolution images for digital printing. Please supply any colour references, fonts and artwork guidelines. Artwork development, re-generation or conversion may incur additional cost.

Client: **The Works**
Designer: **Andy Olley**
Date: **08.09.20**

D86 Princesway North Team Valley Trading Est Gateshead Tyne & Wear NE11 0TU
Tel (0191) 4876767 Email sales@onesignanddigital.com

Existing Elevation



Proposed Elevation



Client Information

We require vector graphics (lines and curves with fonts broken apoart) for cutting/manufacturing or high resolution images for digital printing. Please supply any colour references, fonts and artwork guidelines. Artwork development, re-generation or conversion may incur additional cost.

Client: **The Works**
Designer: **Andy Olley**
Date: **18.06.20**

D86 Princesway North Team Valley Trading Est Gateshead Tyne & Wear NE11 0TU
Tel (0191) 4876767 Email sales@onesignanddigital.com

Existing Elevation - 1:100 at A3

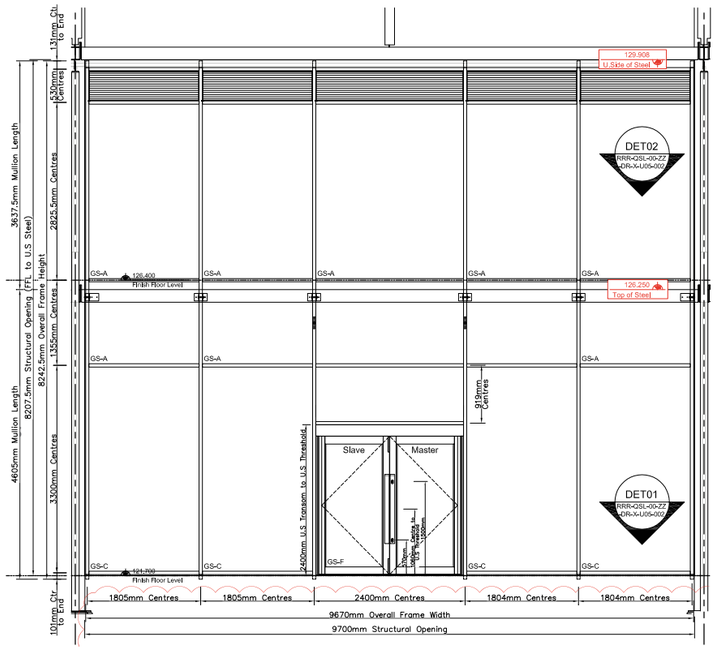

UNIT 04

Proposed Elevation - 1:100 at A3

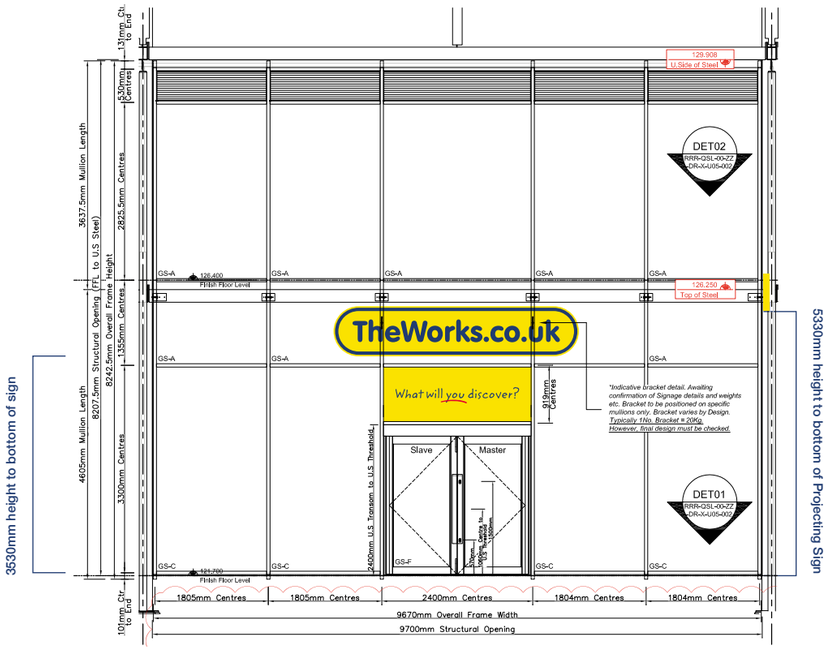

UNIT 04

Client Information

We require vector graphics (lines and curves with fonts broken apoart) for cutting/manufacturing or high resolution images for digital printing. Please supply any colour references, fonts and artwork guidelines. Artwork development, re-generation or conversion may incur additional cost.

Client: The Works
Designer: Andy Olley
Date: 08.09.20

D86 Princesway North Team Valley Trading Est Gateshead Tyne & Wear NE11 0TU
Tel (0191) 4876767 Email sales@onesignanddigital.com



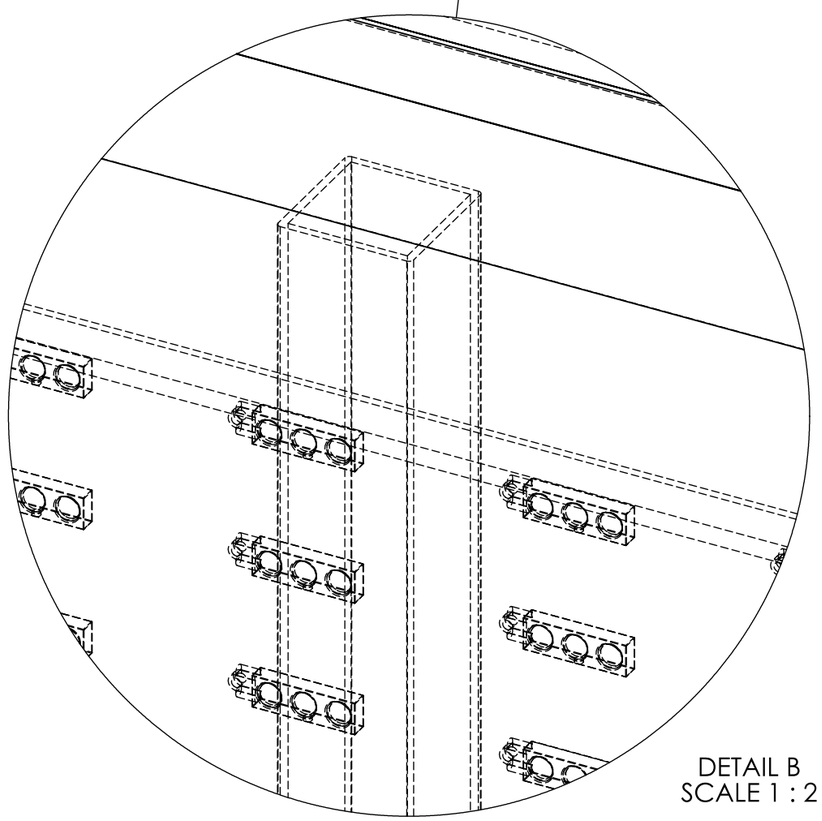

Client Information

We require vector graphics (lines and curves with fonts broken apoart) for cutting/manufacturing or high resolution images for digital printing. Please supply any colour references, fonts and artwork guidelines. Artwork development, re-generation or conversion may incur additional cost.

Client: **The Works**
Designer: **Andy Olley**
Date: **08.09.20**

D86 Princesway North Team Valley Trading Est Gateshead Tyne & Wear NE11 0TU
Tel (0191) 4876767 Email sales@onesignanddigital.com

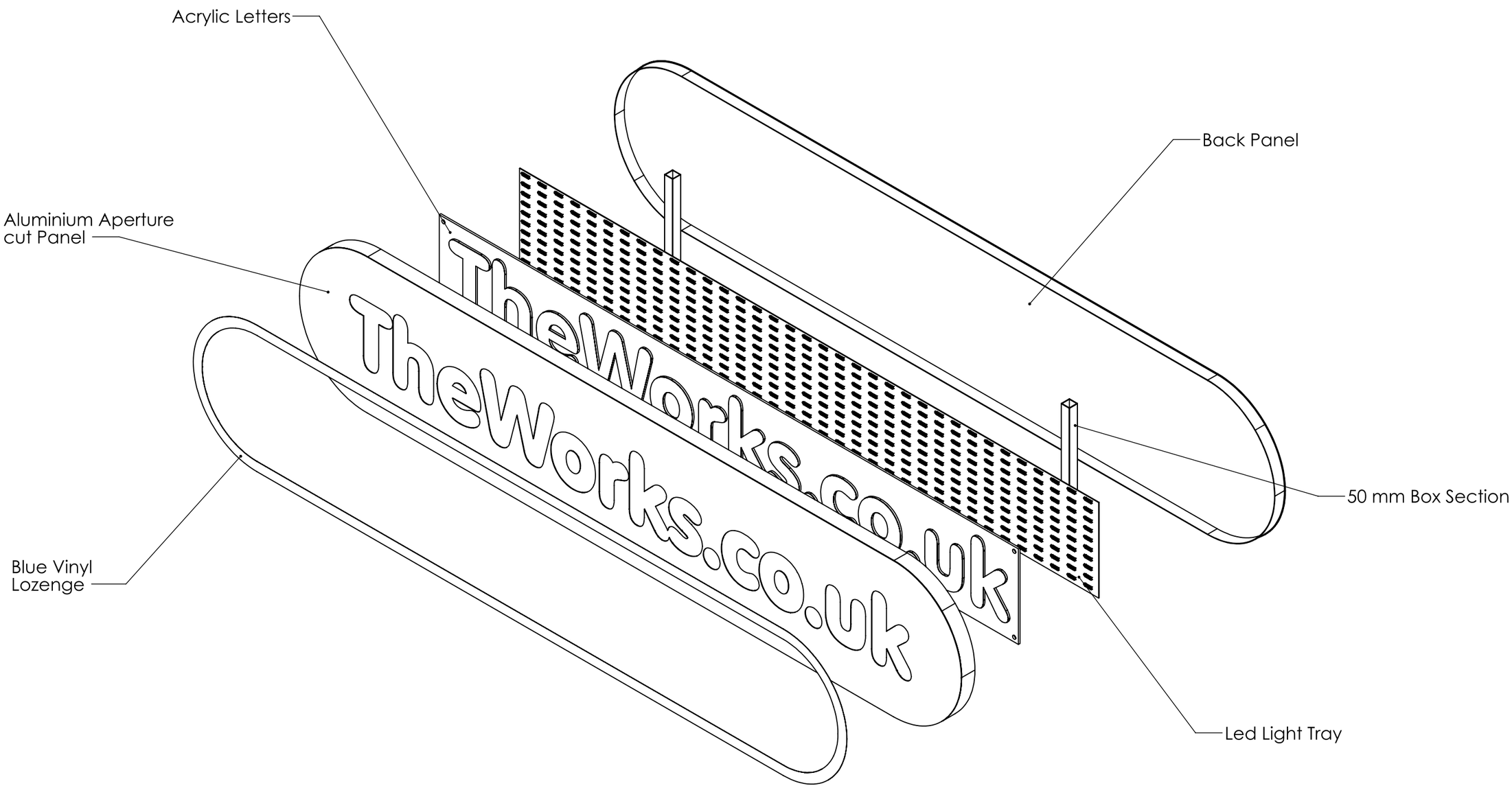

Client Information

We require vector graphics (lines and curves with fonts broken apoart) for cutting/manufacturing or high resolution images for digital printing. Please supply any colour references, fonts and artwork guidelines. Artwork development, re-generation or conversion may incur additional cost.

Client: **The Works**
Designer: **Andy Olley**
Date: **08.09.20**