

Proposed Front Elevation

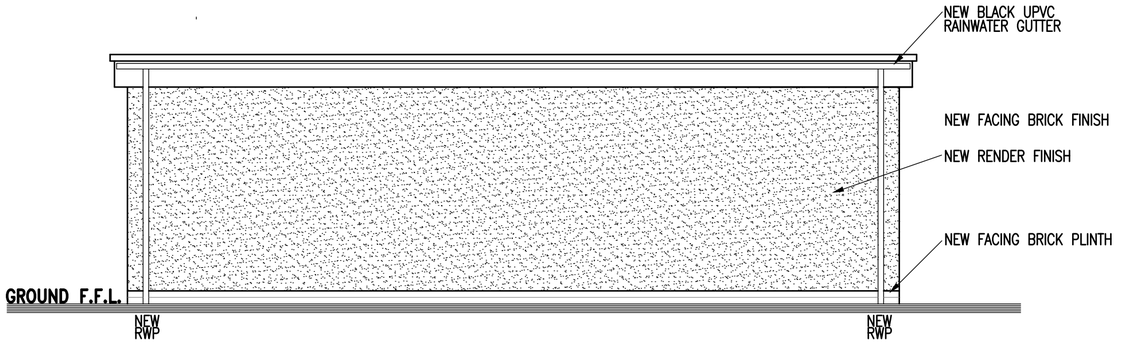

Proposed Rear Elevation

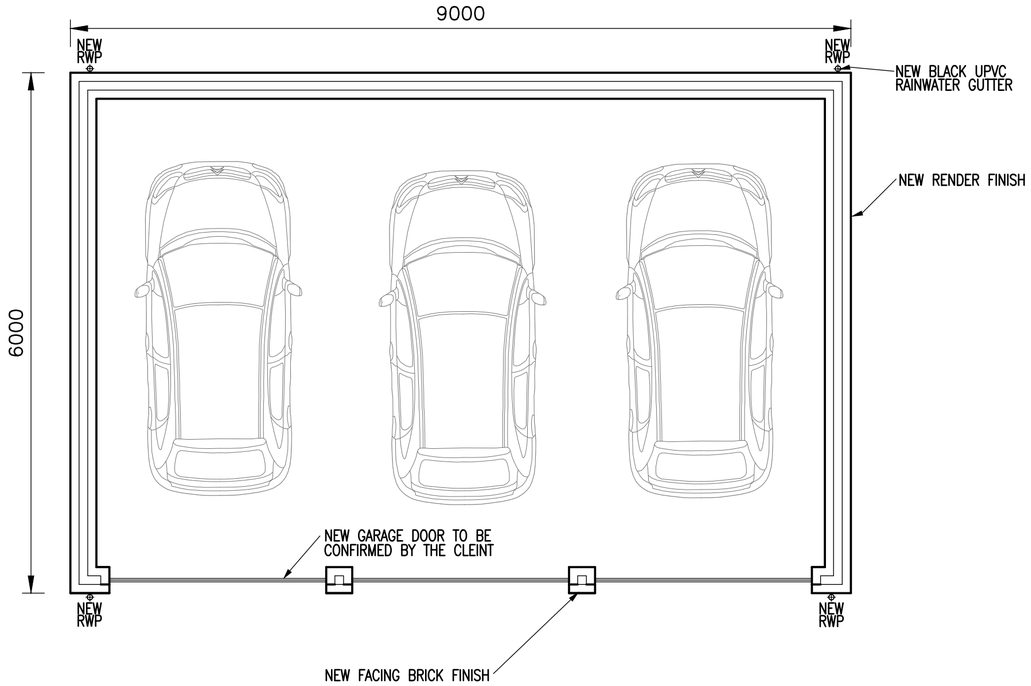

Proposed Ground Floor Plan

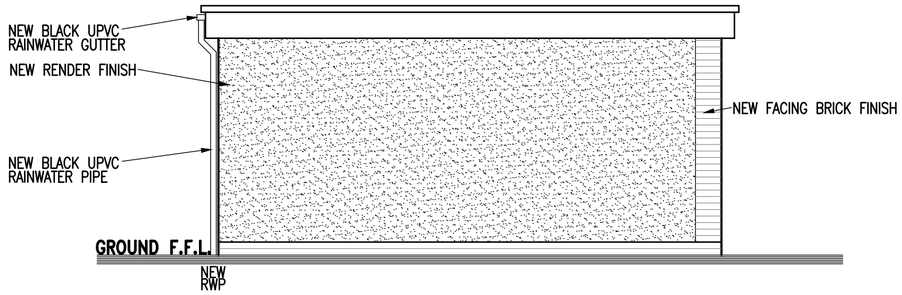

Proposed Side Elevation

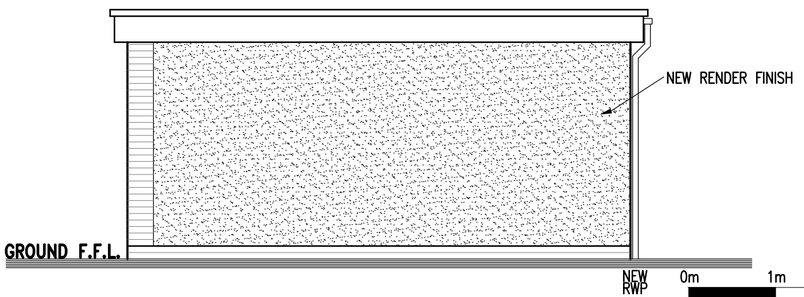

Proposed Side Elevation

0m 1m 2m 3m 4m 5m

MAGNUS TECHNICAL ENGINEERING
Magnus Technical Engineering Ltd.
Blackthorn House
Skull House Lane
Appley Bridge
WN6 9DB

Rev.	Description	By	Date

Project: Residential Development 15, Oakenrod Hill Rochdale Lancashire OL11 4ED	Drawing Title: Proposed Garage Layout Drawing No.: KNIGHT/08 Rev.:
Drawn by: P.E. Scale: 1:50 Date: Sept '18	

1. Figured dimensions to be followed in preference to scale.
2. All dimensions to be checked on site prior to the commencement of any work. Any discrepancies to be reported promptly & resolved prior to work commencing
3. This drawing is the copyright of Magnus Technical Engineering and may not be copied or used without and may not be copied or used without prior consent.