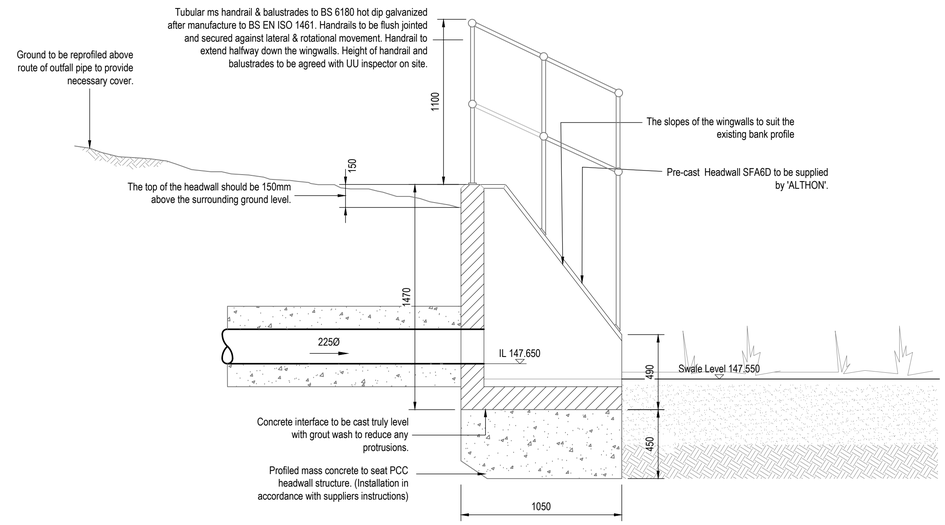


## SECTION THROUGH PROPOSED HEADWALL S35

SCALE 1:20

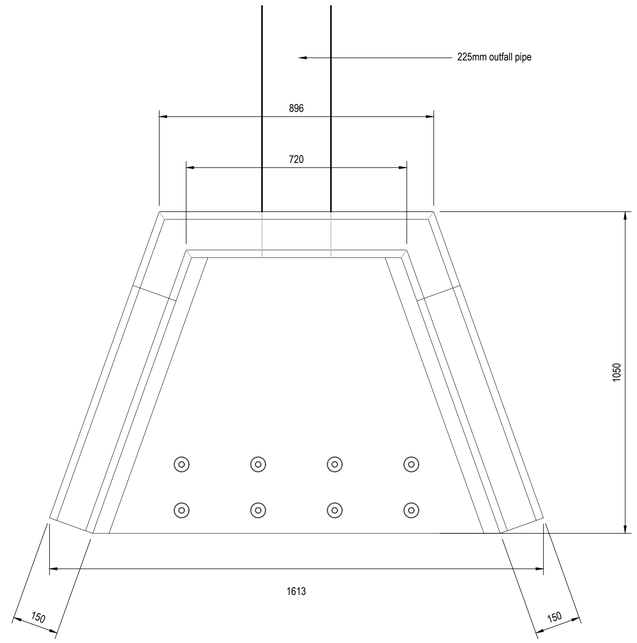


## PLAN VIEW OF PROPOSED HEADWALL SFA6D

SCALE 1:10

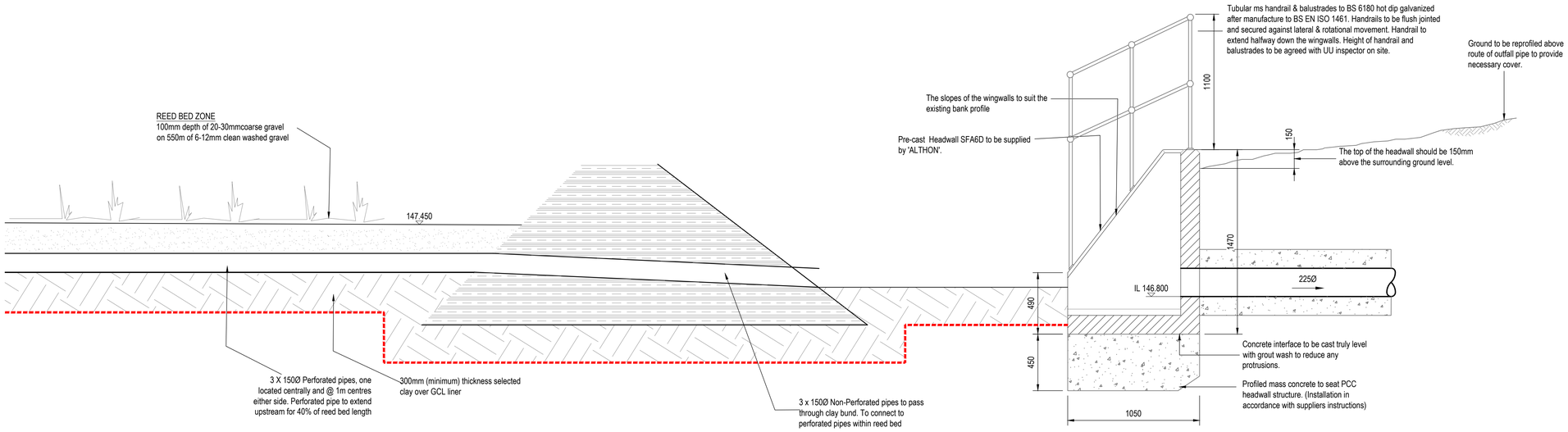


## SECTION THROUGH PROPOSED HEADWALL S36

SCALE 1:20

INFORMATION WITHIN THIS DRAWING IS NOT NECESSARILY PRODUCED TO SCALE. ALWAYS USE FIGURED DIMENSIONS AND CO-ORDINATES - IF IN DOUBT, ASK.

NOTES

| REV | DESCRIPTION | SIG | CHK | DATE |
|---|---|---|---|---|
| A | First Issue. | | | |

VISTRY PARTNERSHIPS YORKSHIRE

LITTLEBOROUGH

SWALE HEADWALL DETAILS

Eastwood & Partners
CONSULTING ENGINEERS
St. Andrew's House
23 Kingfield Road
Sheffield
S11 9AS
Tel 0114 255 4554
Fax 0114 255 4330
mail@eastwoodandpartners.com
www.eastwoodandpartners.com

| SCALE WHEN PLOTTED AT A1 | DRAWING STATUS |
|---|---|
| 1:10 & 1:20 | PRELIMINARY |

| DRAWN | CHECKED | DATE | DRAWING NUMBER | REV |
|---|---|---|---|---|
| AT | GH | 10.11.23 | 45466/042 | A |