DRAWING No	REVISION	SHEET SIZE	SHEET No
0020 ASPECT MINI	A	A3	1 of 1

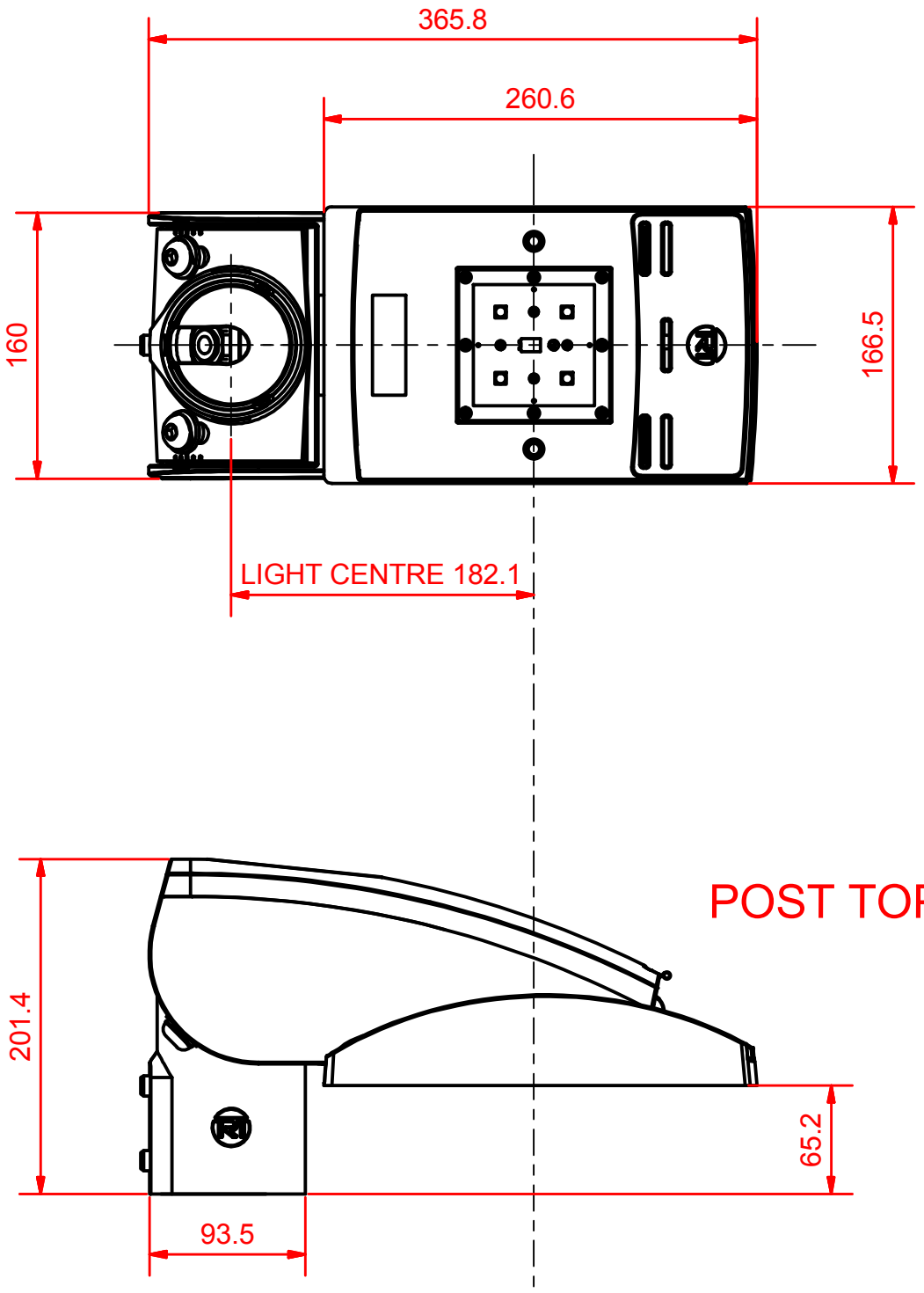

© The contents of this document belong to FW Thorpe PLC. Reproduction in whole or part of the article shown may only be made with prior written permission.

MATERIAL	TRTLIGHTING ROAD & TUNNEL SYSTEMS A division of FW Thorpe Plc			FIRST ANGLE	SCALE - SEE DRAWING VIEWS: DO NOT SCALE; CHECKED
					UNITS - mm; GENERAL TOLERANCE: LIN mm, ANG deg
FINISH	DRAWN BY: R.Stokes	CREATION DATE: 07/09/2020	PROJECT No: 0020	DESCRIPTION	PRODUCT RANGE : ASPECT
				ASPECT MINI GENERAL DIMS	
LATEST REVISION DETAILS	REVISED BY	REVISION DATE		DRAWING No: 0020 ASPECT MINI	REVISION: A