Do Not Scale

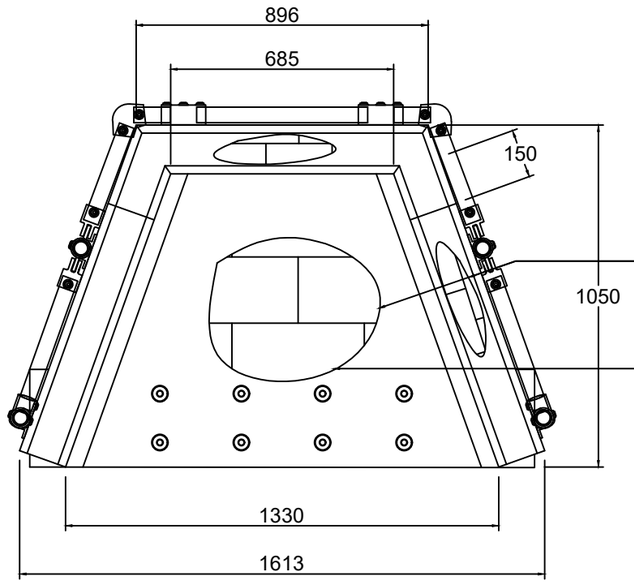

Plan

All exterior concrete facing to be covered by locally quarried stone, following installation (shown indicatively)

Larger stone on the bottom face to provide energy dissipation



3D View

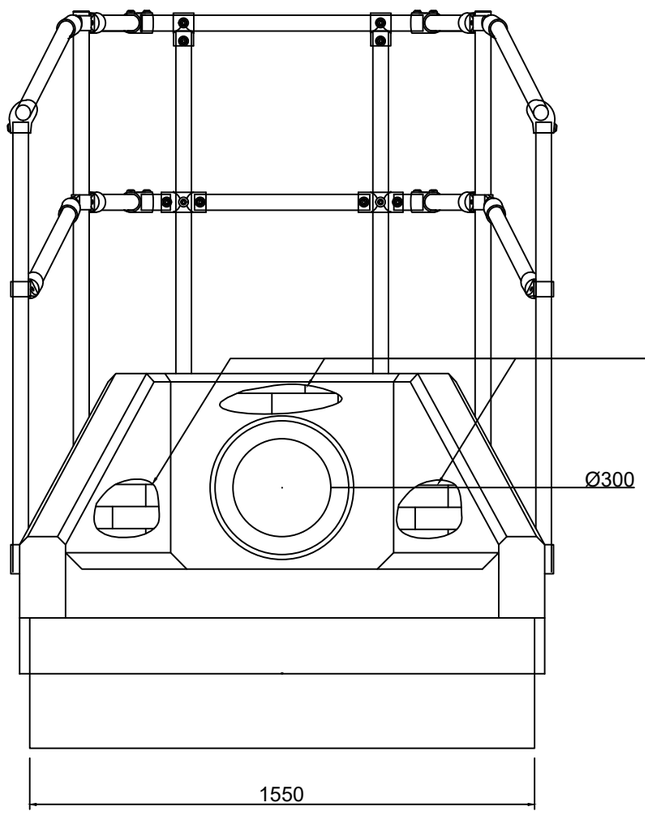

Front Elevation

All exterior concrete facing to be covered by locally quarried stone, following installation (shown indicatively)

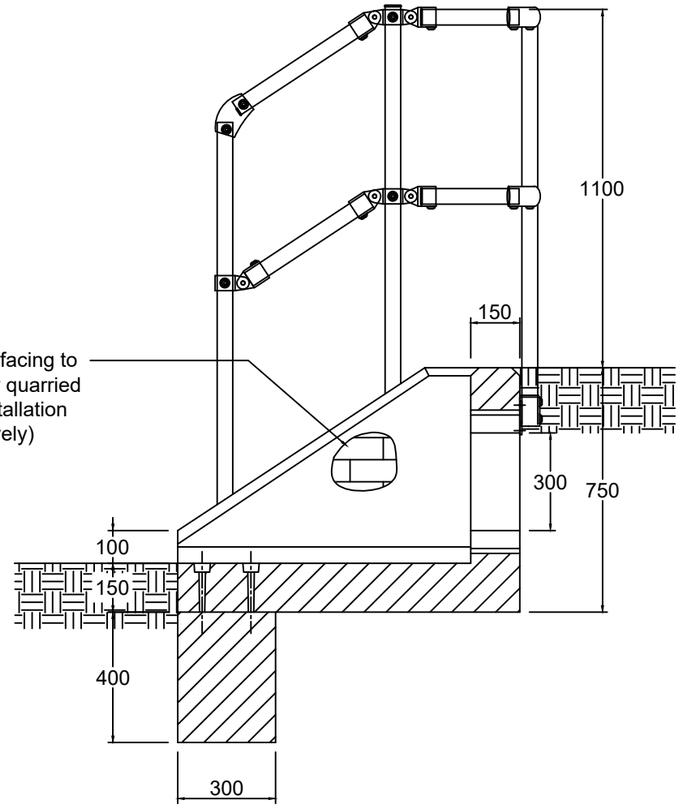

Section

L:\adept_projects\00_clients\2018\00.18179 - Bellfield Mill Lane, Rochdale\01-WIP\Drawings\Civil\00.18179-ACE-00-XX-DR-C-1140-Headwall Details.dwg, 1/4/2021 11:42 AM,

DESIGN REVIEW

Design review by:	**	Checked by:	**

Residual hazards:

Health, Safety & Environmental Notes

Steep/unstable slopes
River flooding

Reproduced based upon Althon SFA6 A Headwall sized for outfall 300mm.

All dimensions are in mm unless otherwise specified.

Date	Description	By	Chk	Rev
04.01.21	Initial Issue	JW	WD	P1

ADEPT
CIVIL AND STRUCTURAL CONSULTING ENGINEERS
Web: www.adeptcsce.com Originating Office
Email: inbox@adeptcsce.com
Tel: 0113 239 4518 (Leeds)
Tel: 0161 974 3620 (Manchester)

Project
Belfield Mill Lane
Rochdale

Title
Headwall Detail

Client
Great Places

Scale @ A3	Initial author	Initial checker	Approver	Initial Date
NTS	JW	WD	WD	31.12.21

Status S2 Purpose Preliminary

Project Number	Originator	Volume	Level	Type	Role	Drg. No.	Rev.
00.18179	ACE	ZZ	XX	DR	C	1140	P1