VDE_A3_v1.2 Plotted By: William Evans on 26.09.2023 at 9:22 AM

THIS DRAWING REMAINS THE PROPERTY OF VITAL ENERGI AND MUST NOT BE REPRODUCED, COPIED, OR HANDED OVER TO A THIRD PARTY WITHOUT PRIOR WRITTEN CONSENT. UNCONTROLLED COPY IF PRINTED

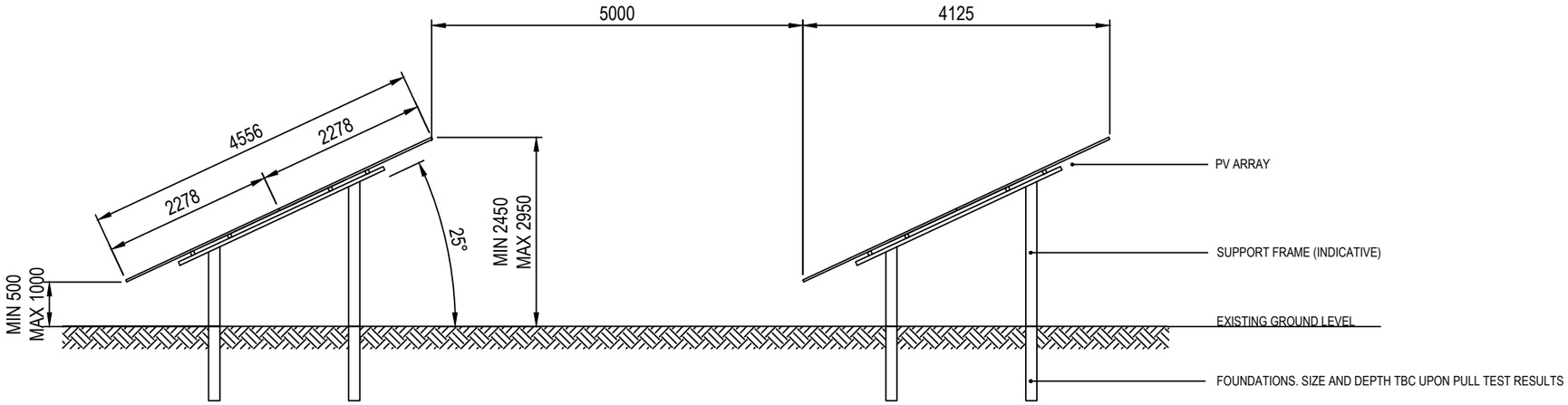

PV ARRAY SECTION THROUGH - TYPICAL TABLE ARRANGEMENT

SCALE 1:75

GENERAL NOTES:

ALL BUILDERS WORK IS TO BE CONSTRUCTED IN ACCORDANCE WITH THE CURRENT AND RELEVANT BUILDING REGULATIONS AND BRITISH STANDARDS. MANUFACTURERS INSTALLATION/ GUIDANCE NOTES ARE TO BE READ IN CONJUNCTION TO TASK BEING CARRIED OUT.

ALL DIMENSIONS ON DRAWING ARE IN MILLIMETERS UNLESS OTHERWISE STATED. ALL LEVELS ON DRAWING ARE IN METERS UNLESS OTHERWISE STATED.

ALL MATERIALS AND WORKMANSHIP SHALL BE IN ACCORDANCE WITH THE RELEVANT SPECIFICATIONS AND BRITISH STANDARDS

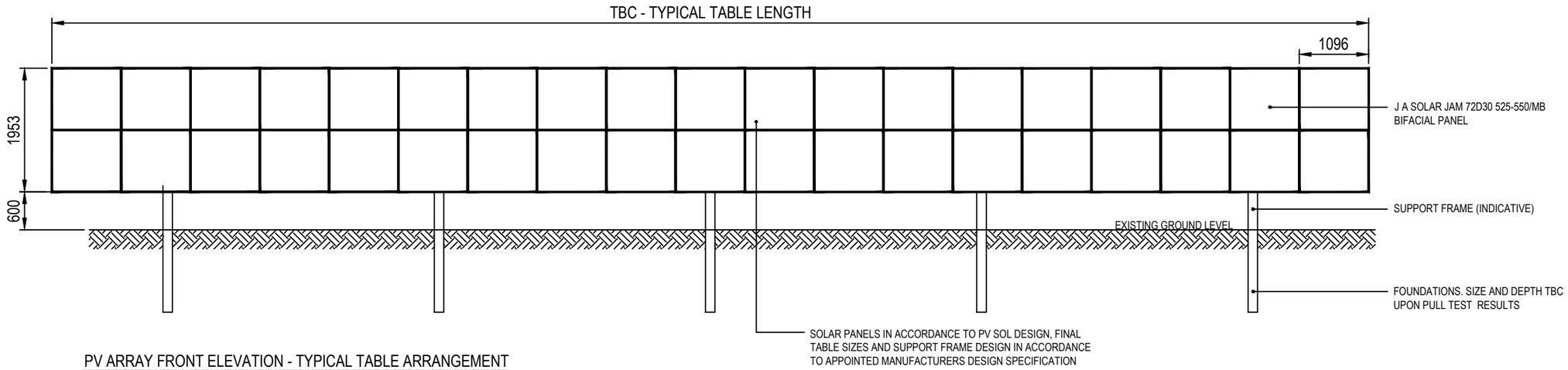

PV ARRAY FRONT ELEVATION - TYPICAL TABLE ARRANGEMENT

SCALE 1:75

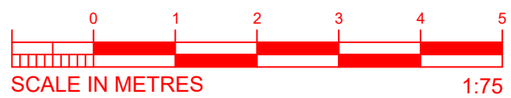

AS-BUILT / HANDOVER

REV	DATE	DESCRIPTION	DRW	CKD	APP
AB	26.09.23	AS-BUILT / HANDOVER	WE	RJR	BMc

VITAL ENERGi.
Century House,
Roman Road, Blackburn
United Kingdom, BB1 2LD.
Tel: +44 (0)1254 296 000
Fax. +44 (0)1254 296 040

VITAL ENERGi

Project: CHAMBER HOUSE

Title: TYPICAL ELEVATION &SECTION THROUGH SOLAR ARRAY

DATE	17.11.2022	SCALE	1:75	SHEET	A3

AS-BUILT / HANDOVER

Status: AB

Stage: 6

Drg-No: 50716-VE-SW-XX-S-A-XX01

Rev: AB