Royle Works, Rochdale Additional Tree Removal Plan

Removal of additional trees

1. Due to the new proposal layout 3 additional trees will require removal.
2. T66 and 1 x tree within G69 due to the close proximity of plot 191.
3. 1 x tree within G59 to allow adequate space for the leap.



Do not scale this drawing (printed or electronic version).

Contractors must check all dimensions from site

This drawing is copyright and is for use on this site only. This drawing should be read in conjunction with all relevant consultants drawings and specialist subcontractors / supply chain drawings and specifications.

All works to be carried out in accordance with the latest British Standards / Codes of Practice unless specifically directed otherwise in the specification.

Responsibility for the reproduction of this drawing in paper form, or issued in electronic format, lies with the recipient to check that all information has been replicated in full and is correct when comparedto the original paper or electronic image.

Graphical representations of equipment on this drawing have been co-ordinated, but are approximations only. Please refer to the specifications and / or details for actual sizes and / or specific contractor construction information.

Notes:-

N

Symbol	Meaning
green dot	Category A tree, group or hedge
blue dot	Category B tree, group or hedge
grey dot	Category C tree, group or hedge
dark red dot	Category U tree, group or hedge
solid green circle	Retained tree
dashed red circle	Removed tree
#	Position estimated on site

REV.	DATE	DESCRIPTION	DRAWN	CHK'D

URBAN GREEN

A: Ground Floor, The Tower, Deva City Office Park, Trinity Way, Manchester M3 7BF

T: +44 (0) 161 312 3131

weareurbangreen.co.uk

Client: PARTNERSHIPS NORTH COUNTRYSIDE PROPERTIES

Project: ROYLE WORKS, ROCHDALE

Title: ADDITIONAL TREE REMOVAL PLAN

Issue: PLANNING

Drawn: KO	Checked: AB	Approved: AB
Project: 11969	Scale @ A0: 1:500	Date: 02/12/19
Dwg No: UG_11969_ARB_TRP_01		Revision: 00



Do not scale this drawing (printed or electronic version).

Contractors must check all dimensions from site

This drawing is copyright and is for use on this site only. This drawing should be read in conjunction with all relevant consultants drawings and specialist subcontractors / supply chain drawings and specifications.

All works to be carried out in accordance with the latest British Standards / Codes of Practice unless specifically directed otherwise in the specification.

Responsibility for the reproduction of this drawing in paper form, or issued in electronic format, lies with the recipient to check that all information has been replicated in full and is correct when comparedto the original paper or electronic image.

Graphical representations of equipment on this drawing have been co-ordinated, but are approximations only. Please refer to the specifications and / or details for actual sizes and / or specific contractor construction information.

Notes:-

- Category A tree, group or hedge
- Category B tree, group or hedge
- Category C tree, group or hedge
- Category U tree, group or hedge
- Retained tree
- Root Protection Area (RPA)
- # Position estimated on site
- Redline Site Boundary
- Protective fencing (See Insert 1 & Insert 2)
- Boundary Treatment
- Cellular Confinement System
- Ground protection (See Insert 3)
- Supervised excavation

REV.	DATE	DESCRIPTION	DRAWN	CHK'D

URBAN GREEN

A: Ground Floor, The Tower, Deva City Office Park, Trinity Way, Manchester M3 7BF

T: +44 (0) 161 312 3131

weareurbangreen.co.uk

Client:
PARTNERSHIPS NORTH COUNTRYSIDE PROPERTIES

Project:
ROYLE WORKS, ROCHDALE

Title:
TREE PROTECTION PLAN

Issue:
PLANNING

Drawn:	Checked:	Approved:
KO	AB	AB

Project:	Scale @ A0:	Date:
11969	1:500	02/12/19

Dwg No:	Revision:
UG_11969_ARB_TPP_01	00

Insert 1: Tree protective fencing specification

Default specification for protective barrier

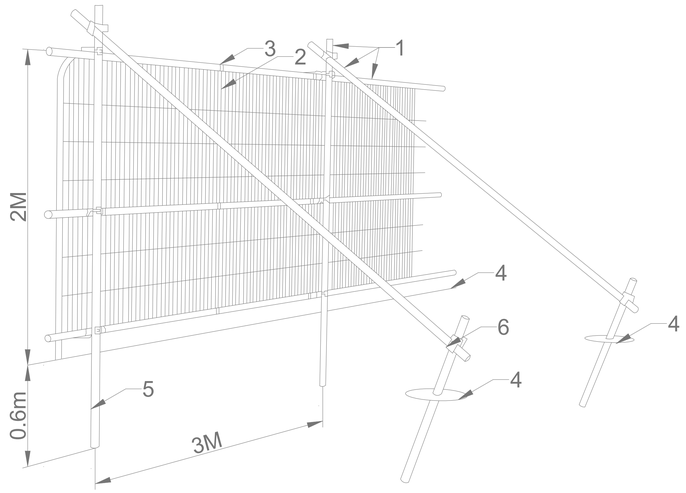

Key

1 Standard scaffold poles
2 Heavy gauge 2m tall galvanised tube and welded mesh infill panels
3 Panels secured to upright and cross-members with wire ties
4 Ground level
5 Uprights driven into the ground untill secure (minimum depth 0.6m)
6 Standard scaffold clamps

Back-stay support

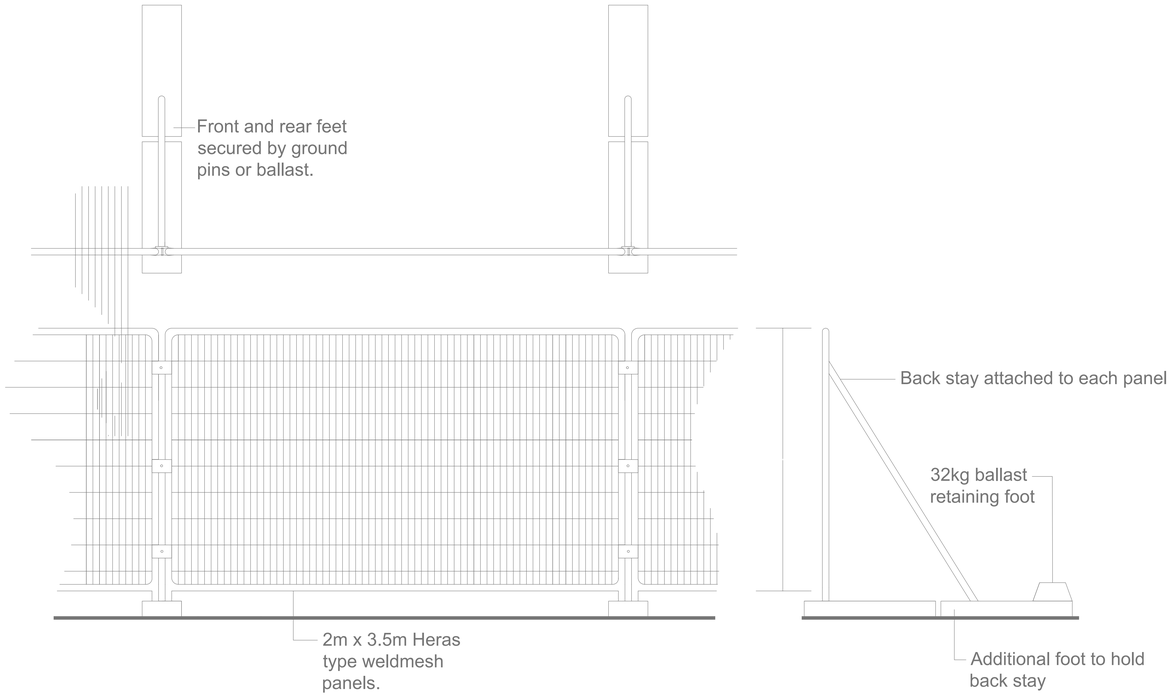

Insert 2: Tree protection notice



Insert 3: Ground protection specification

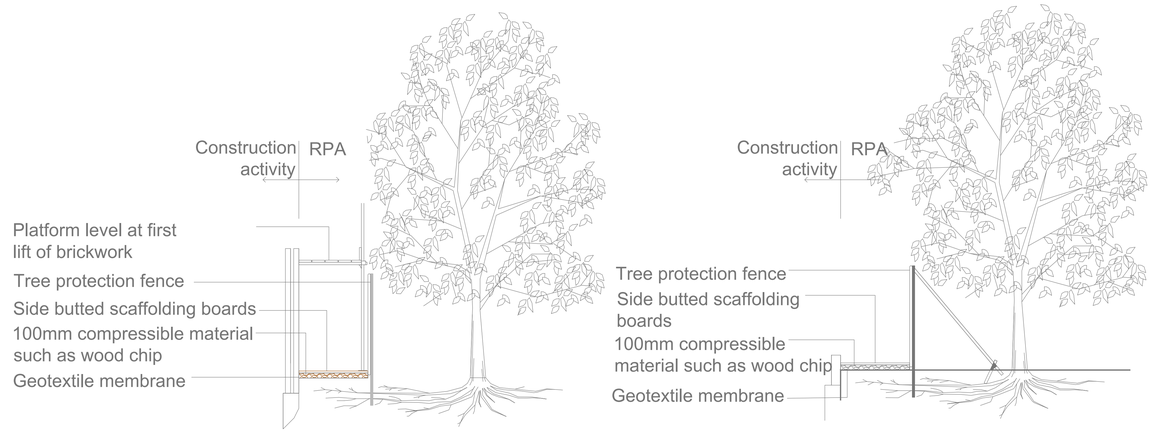

Do not scale this drawing (printed or electronic version).

Contractors must check all dimensions from site

This drawing is copyright and is for use on this site only. This drawing should be read in conjunction with all relevant consultants drawings and specialist subcontractors / supply chain drawings and specifications.

All works to be carried out in accordance with the latest British Standards / Codes of Practice unless specifically directed otherwise in the specification.

Responsibility for the reproduction of this drawing in paper form, or issued in electronic format, lies with the recipient to check that all information has been replicated in full and is correct when comparedto the original paper or electronic image.

Graphical representations of equipment on this drawing have been co-ordinated, but are approximations only. Please refer to the specifications and / or details for actual sizes and / or specific contractor construction information.

Notes:-

REV.	DATE	DESCRIPTION	DRAWN	CHK'D

URBAN GREEN

A: Ground Floor, The Tower, Deva City Office Park, Trinity Way, Manchester M3 7BF

T: +44 (0) 161 312 3131

weareurbangreen.co.uk

Client:
PARTNERSHIPS NORTH COUNTRYSIDE PROPERTIES

Project:
ROYLE WORKS, ROCHDALE

Title:
TREE PROTECTION INDEX

Issue:
PLANNING

Drawn:	Checked:	Approved:
KO	AB	AB
Project:	**Scale @ A0:**	**Date:**
11969	NTS	02/12/19
Dwg No:		**Revision:**
UG_11969_ARB_TPI_01		00

Arboricultural Method Statement (AMS)
Royle Works, Rochdale

Construction work in close proximity to important trees, or within the Root Protection Area (RPA) of a tree(s) due to be retained were identified within the Arboricultural Tree Protection Plan UG_11969_ARB_TPP_01

This AMS should be read in conjunction with Urban Green Tree Removals Statement (ref: 11969) dated 12 February 2019 and the Tree Protection Plan as it cross references the Tree Protection Plan for each specific area of work

The AMS aims to provide general guidelines to onsite personnel that must be followed when working close to trees on construction sites. All site personnel should have access to this document and be made aware of any sections that may be relevant to their specific area of work.

It is essential to adhere to the recommendations within this document during on-site operations to ensure the successful retention of trees as part of the proposed development. Compliance with the AMS will be a requirement of all relevant contracts associated with the proposed development.

Cellular Confinement System

The new surface must utilise a cellular confinement system to avoid compaction and undue damage to the rooting environment.

The four general principles that will require strictly upholding when designing a no dig solution within the RPA are:

- Roots must not be severed.
- Ground Levels must not be changed.
- Soil structure must not be damaged by compaction.
- Oxygen and water must be able to diffuse into the soil below.

A cellular confinement system will ensure that no excavation is required. This will therefore lead to an increase in ground levels.

The sequence of events for the installation of the cellular confinement system will be as follows:

1.Remove the surface vegetation within the footprint of the roadway up to 50mm.

2.A 40mm layer of washed sharp sand containing no fines or salt will be spread across the footprint of the roadway filling any hollows. High points must not be compacted though rolling.

3.Appropriate kerbing/edging will be set above ground level. The cellular confinement system may be retained using pins that are driven into the ground and supported by treated timber edging.

4.A geotextile membrane will be laid over the footprint of the roadway with each section overlapping by a minimum of 300mm.

5.Open out and lay the specified layer thickness of cellular (to be confirmed by product manufacturer and engineer) and pin in place between the edging boards. It may be necessary to cut the cellular confinement system to size using a sharp knife or it can be left uncut and folded up against the edgings if preferred.

6.Ensure that the cells are fully expanded by inserting steel fixing pins at approximately 1-2m spacings (depending on specific engineering requirements). Avoid tree root damage during the pinning process.

7.The cells must be filled with clean, open graded angular aggregate, normally in the particle size range of 5mm - 45mm, not single sized or rounded aggregate. The project engineer may determine alternative fill materials.

8.Do not roll the surface, a light vibratory compaction plate (whacker) may be permitted to settle the stone into the cells. Do not contaminate the filled cells with site debris, soil or mud.

9.Install the permeable pavement layer/wearing course



Cellweb 75~200mm Porous Tarmac Surface Standard Detail

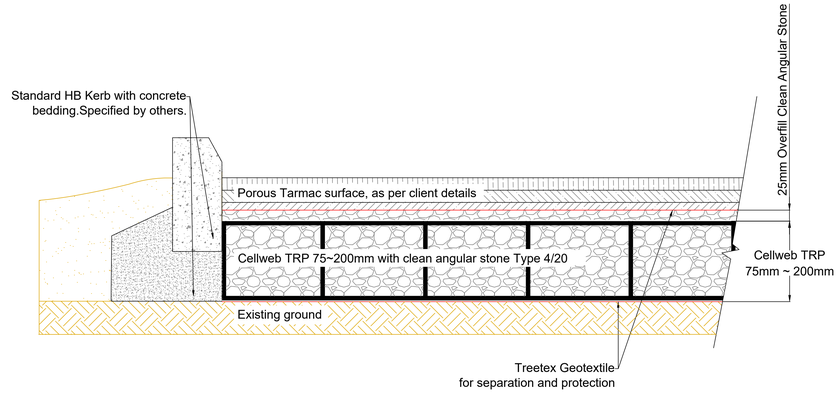

Note: Subbase could be required depending on the existing ground CBR % and the type of traffic on the surface.

Do not scale this drawing (printed or electronic version).

Contractors must check all dimensions from site

This drawing is copyright and is for use on this site only. This drawing should be read in conjunction with all relevant consultants drawings and specialist subcontractors / supply chain drawings and specifications.

All works to be carried out in accordance with the latest British Standards / Codes of Practice unless specifically directed otherwise in the specification.

Responsibility for the reproduction of this drawing in paper form, or issued in electronic format, lies with the recipient to check that all information has been replicated in full and is correct when comparedto the original paper or electronic image.

Graphical representations of equipment on this drawing have been co-ordinated, but are approximations only. Please refer to the specifications and / or details for actual sizes and / or specific contractor construction information.

Notes:-

Cellular Confinement System

REV.	DATE	DESCRIPTION	DRAWN	CHK'D

U R B A N
G R E E N

A: Ground Floor, The Tower,
Deva City Office Park, Trinity Way,
Manchester M3 7BF

T: +44 (0) 161 312 3131

weareurbangreen.co.uk

Client:
PARTNERSHIPS NORTH COUNTRYSIDE PROPERTIES

Project:
ROYLE WORKS, ROCHDALE

Title:
ARBORICULTURAL METHOD STATEMENT

Issue:
PLANNING

Drawn:	Checked:	Approved:
KO	AB	AB
Project: 11969	**Scale @ A0:** NTS	**Date:** 02/12/19
Dwg No: UG_11969_ARB_AMS_01		**Revision:** X01

Arboricultural Method Statement (AMS)
Royle Works, Rochdale
Boundary Treatments

1. Where fencing is to be installed within RPAs of retained trees, post holes will be excavated by hand and kept as narrow as possible. Trial holes will be dug using a manually operated soil augur in order to position post holes to avoid major roots.

2. Exploratory post holes will be dug before committing to positions. If any roots in excess of 25mm are encountered they are to remain intact and the post hole will be relocated to avoid them. The fencing system must permit such flexibility (i.e. where fixed panel widths are used, all post holes must be excavated before committing to the final location)

3. All post holes will be excavated by hand and kept as narrow as possible (maximum diameter 300mm).

4. Any roots in excess of 10mm which are severed will be neatly pruned back with secateurs. This will encourage healing and reduce the likelihood of infection.



Do not scale this drawing (printed or electronic version).

Contractors must check all dimensions from site

This drawing is copyright and is for use on this site only. This drawing should be read in conjunction with all relevant consultants drawings and specialist subcontractors / supply chain drawings and specifications.

All works to be carried out in accordance with the latest British Standards / Codes of Practice unless specifically directed otherwise in the specification.

Responsibility for the reproduction of this drawing in paper form, or issued in electronic format, lies with the recipient to check that all information has been replicated in full and is correct when comparedto the original paper or electronic image.

Graphical representations of equipment on this drawing have been co-ordinated, but are approximations only. Please refer to the specifications and / or details for actual sizes and / or specific contractor construction information.

Notes:-

Boundary Treatment

REV.	DATE	DESCRIPTION	DRAWN	CHK'D

URBAN GREEN

A: Ground Floor, The Tower, Deva City Office Park, Trinity Way, Manchester M3 7BF

T: +44 (0) 161 312 3131

weareurbangreen.co.uk

Client:
PARTNERSHIPS NORTH COUNTRYSIDE PROPERTIES

Project:
ROYLE WORKS, ROCHDALE

Title:
ARBORICULTURAL METHOD STATEMENT

Issue:
PLANNING

Drawn:	Checked:	Approved:
KO	AB	AB
Project:	**Scale @ A0:**	**Date:**
11969	NTS	02/12/19
Dwg No:		**Revision:**
UG_11969_ARB_AMS_02		X01

Arboricultural Method Statement (AMS)
Royle Works, Rochdale
Excavations for proposed boundary wall

1. Any necessary excavation must be carried out using hand tools to avoid direct damage to the protective bark of tree roots. It may be possible in some instances to use specialised equipment such as high air pressure machinery to excavate the soil with minimal disturbance to roots.

2. Exposed roots will be wrapped in dry, clean Hessian sacking to prevent desiccation and to protect from rapid temperature changes. In warmer weather, the sacking should be kept moist by regular watering. Sacking should be removed before backfilling.

3. Roots less than 25mm diameter may be pruned back, preferably to a growing point. A sharp cutting tool such as bypass secateurs or a handsaw should be used to leave the smallest wound possible. Roots greater than 25mm in diameter should be retained wherever possible.

4. Root pruning should be carried out under the supervision of the Arboricultural Consultant to ensure that only roots necessary to facilitate the development will be removed and the long-term well-being of retained trees is maintained.

5. Backfilling of any excavation should be carried out by hand to avoid direct root damage by excessive compaction and should include, where possible, the replacement of inert granular material mixed with sharp sand (not builder's sand) around retained roots.

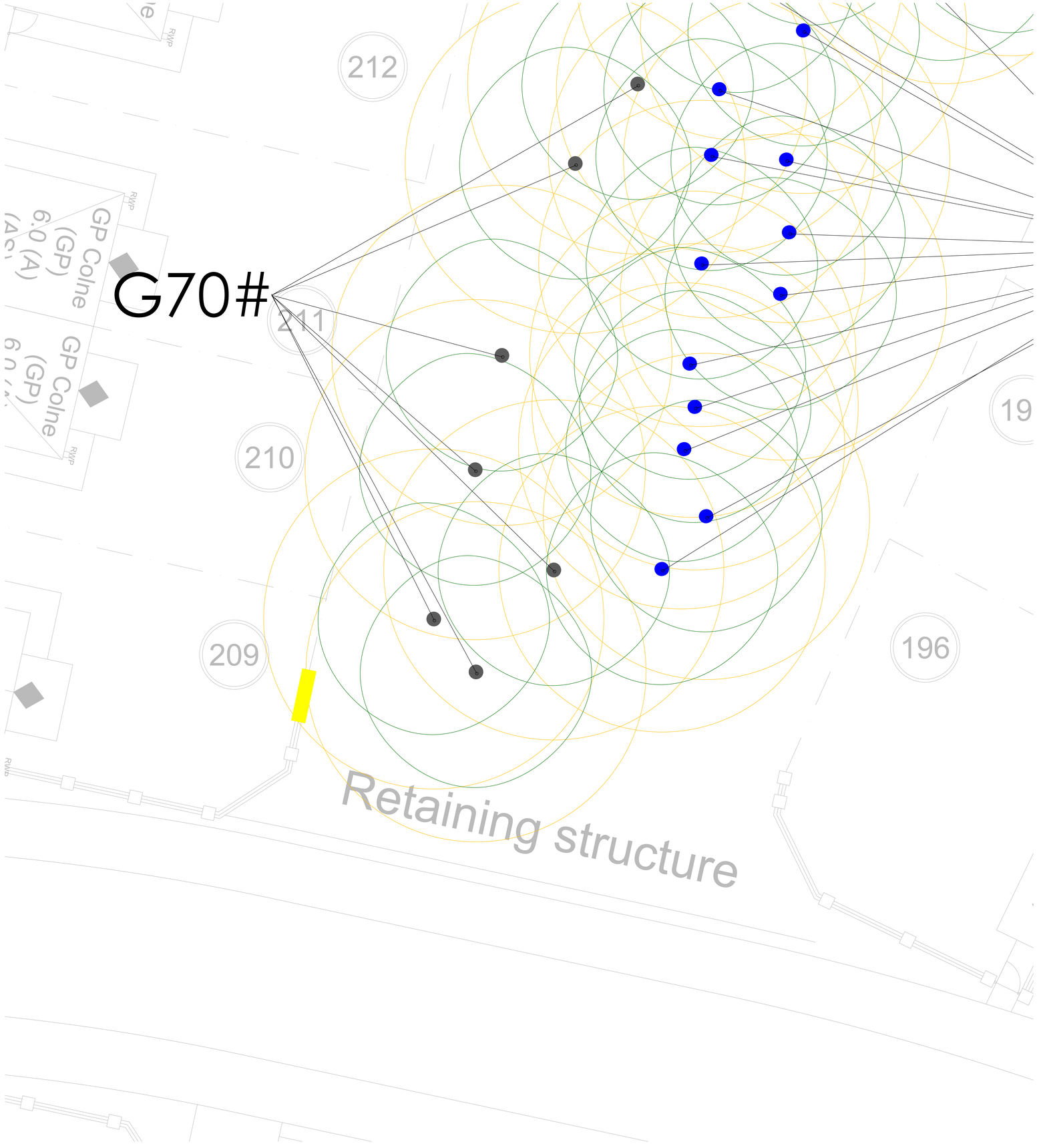

Do not scale this drawing (printed or electronic version).

Contractors must check all dimensions from site

This drawing is copyright and is for use on this site only. This drawing should be read in conjunction with all relevant consultants drawings and specialist subcontractors / supply chain drawings and specifications.

All works to be carried out in accordance with the latest British Standards / Codes of Practice unless specifically directed otherwise in the specification.

Responsibility for the reproduction of this drawing in paper form, or issued in electronic format, lies with the recipient to check that all information has been replicated in full and is correct when comparedto the original paper or electronic image.

Graphical representations of equipment on this drawing have been co-ordinated, but are approximations only. Please refer to the specifications and / or details for actual sizes and / or specific contractor construction information.

Notes:-

Supervised excavation

REV.	DATE	DESCRIPTION	DRAWN	CHK'D

U R B A N G R E E N

A: Ground Floor, The Tower, Deva City Office Park, Trinity Way, Manchester M3 7BF

T: +44 (0) 161 312 3131

weareurbangreen.co.uk

Client:
PARTNERSHIPS NORTH COUNTRYSIDE PROPERTIES

Project:
ROYLE WORKS, ROCHDALE

Title:
ARBORICULTURAL METHOD STATEMENT

Issue:
PLANNING

Drawn:	Checked:	Approved:
KO	AB	AB
Project:	**Scale @ A0:**	**Date:**
11969	1:20	02/12/19
Dwg No:		**Revision:**
UG_11969_ARB_AMS_03		X01

Arboricultural Monitoring Schedule

Task	Description	Person Responsible	Date	Signed
Work Schedule	Agree timeline of construction works, including key arboricultural works.	Site manager / Arboricultural Consultant		
Inspection of tree works	Ensure that all tree works have been completed in accordance with the schedule and in accordance with BS3998.	Local Authority Tree Officer / Arboricultural Consultant		
Inspection of protective fencing	Inspection of protective fencing prior to any construction works beginning on site to ensure that it is installed in accordance with the Tree Protection Plan.	Arboricultural consultant		
Installation of cellular confinement system	Cellular confinement system to be installed in accordance with the suppliers specification.	Supplier / Arboricultural consultant		
Supervised excavations	Boundary wall Installation to be excavation by hand in area shown on the Tree Protection Plan under Arboricultural supervision.	Arboricultural consultant		
Installation of boundary fencing	Boundary fencing to be installed in accordance with specification.	Arboricultural consultant		
Inspection of protective fencing	Ad hoc inspection of protective fencing to ensure continued tree protection during construction.	Arboricultural consultant		
Inspection of protective fencing.	Inspection and sign off of protective fencing upon completion of construction prior to its removal.	Arboricultural consultant		

Do not scale this drawing (printed or electronic version).

Contractors must check all dimensions from site

This drawing is copyright and is for use on this site only. This drawing should be read in conjunction with all relevant consultants drawings and specialist subcontractors / supply chain drawings and specifications.

All works to be carried out in accordance with the latest British Standards / Codes of Practice unless specifically directed otherwise in the specification.

Responsibility for the reproduction of this drawing in paper form, or issued in electronic format, lies with the recipient to check that all information has been replicated in full and is correct when comparedto the original paper or electronic image.

Graphical representations of equipment on this drawing have been co-ordinated, but are approximations only. Please refer to the specifications and / or details for actual sizes and / or specific contractor construction information.

Notes:-

REV.	DATE	DESCRIPTION	DRAWN	CHK'D

U R B A N
G R E E N

A: Ground Floor, The Tower,
Deva City Office Park, Trinity Way,
Manchester M3 7BF

T: +44 (0) 161 312 3131

weareurbangreen.co.uk

Client:
PARTNERSHIPS NORTH COUNTRYSIDE PROPERTIES

Project:
ROYLE WORKS, ROCHDALE

Title:
ARBORICULTURAL METHOD STATEMENT - SIGN OFF

Issue:
PLANNING

Drawn:	Checked:	Approved:
KO	AB	AB
Project:	**Scale @ A0:**	**Date:**
11969	NTS	02/12/19
Dwg No:		**Revision:**
UG_11969_ARB_AMS_04		X01