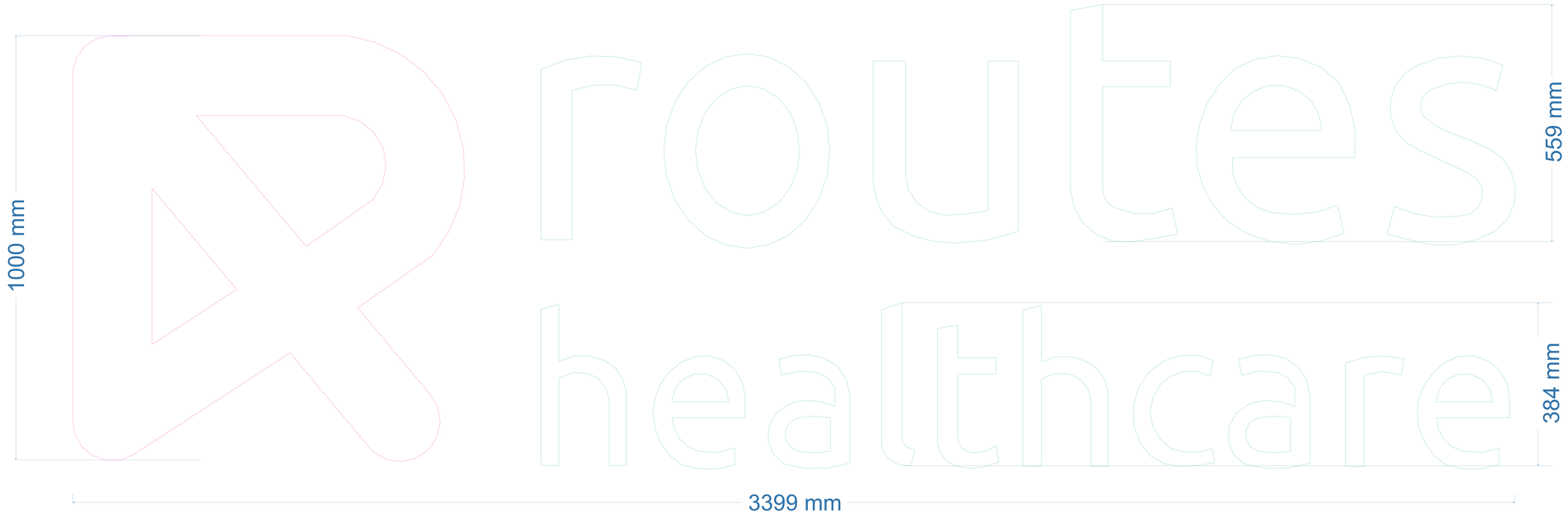

Example Illuminated Letters

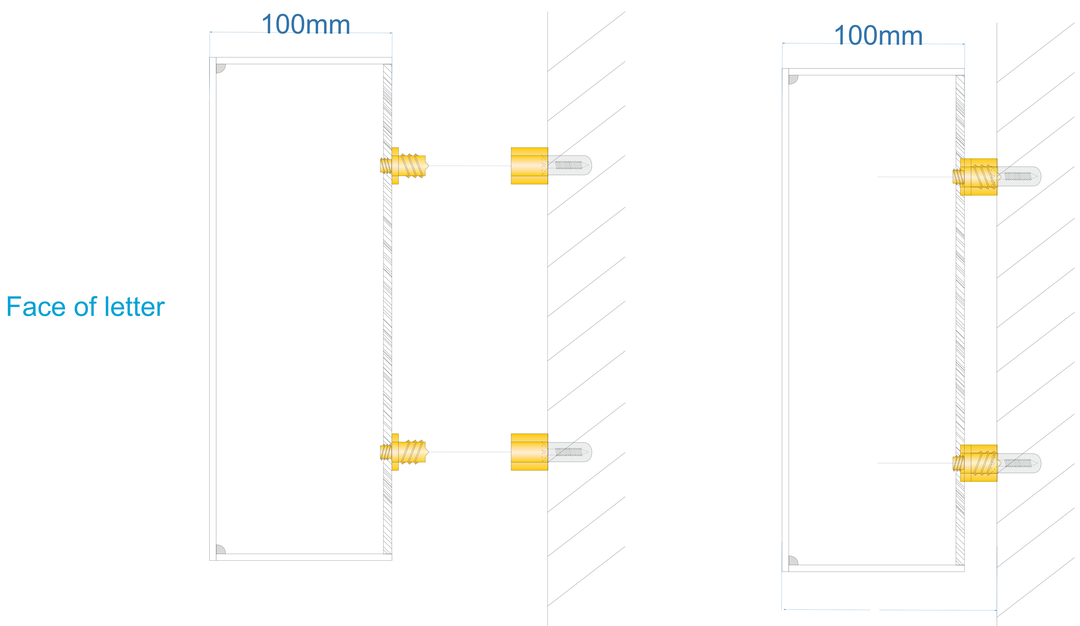

Letters will be spaced 20mm from wall
when locators are fixed together

Illuminated Logo
Built-up metal letter powder coated to a standard RAL (white)
on locator fixings with opal perspex face and internal LED illumination
Less than 500 candela illumination level

Non Illuminated Letters
Buil-up metal letters on locator fixings, powder coated to a standard RAL (white)