Represented by:
ELTA GROUP BUILDING SERVICES LTD
email: info@egbuildingservices.co.uk
Tel: +44 (0)1384 275800 Fax: +44 (0)1384 275810
46 Third Avenue, Pensnett Trading Estate
Kingswinford, West Midlands DY6 7US

Version 5.18.6 Copyright © 2010-17 Elta Group

A BRAND OF eg BUILDING SERVICES

To:	Ditta	Date:	22/03/2018
Attention:	Arfat	Fax No.:	
From:	Nathan Jones	Email Address:	

Quotation 50K-0318-260

Kitchen Extract Fan Unit

We have pleasure in forwarding our quotation for the supply of equipment for the above project, as detailed on the schedules.

Qty.	Items	Base Quote
1	Fan(s) and ancillaries, as listed	£922.00
	Total Ex VAT	**£922.00**

- *** PLEASE REFER TO OUR QUOTE NUMBER / PROJECT REF. WHEN PLACING YOUR ORDER ***
- Delivery Schedule To Be Advised prior to the receipt of a technically and commercially clear purchase order.
- In all respects not otherwise noted, all prices within this quotation are valid for thirty (30) days only.
- Prices are quoted LIST exclusive of VAT and any special packaging, freight or shipping documentation charges unless otherwise specified.
- Select Goods with a NETT Value in excess of £500.00 to branch/site is Free of Charge. Goods with a NETT Value below £500.00 to branch/site address is £15.00.
- All Special Build Non-Select & Heat Recovery Products requiring Standard Next Day Delivery, will incur a Carriage Charge of 5% of the NETT order value.
- If a Specialised/Dedicated Vehicle is required or any special off-loading requirements on site (i.e Hiab/Tail-Lifts/Timed-Delivery) please contact Elta Fans for the cost of this vehicle.
- ELTA Group Building Services Limited standard terms and conditions of sale will apply. Copy of terms and conditions is available on request or on the company web site, please enquire.
- In accordance with Ecodesign requirements for motors for product sales within the EU, product identified within this quotation having IE2 motors must be used with a Variable Speed Drive.

Yours faithfully

Nathan Jones

Quotation subject to our standard conditions of sale

Represented by:
ELTA GROUP BUILDING SERVICES LTD
email: info@egbuildingservices.co.uk
Tel: +44 (0)1384 275800 Fax: +44 (0)1384 275810
46 Third Avenue, Pensnett Trading Estate
Kingswinford, West Midlands DY6 7US

Version 5.18.6 Copyright © 2010-17 Elta Group

A BRAND OF eg BUILDING SERVICES

Quotation 50K-0318-260
Fans

Project: Kitchen Extract Fan Unit

Date: 22/03/2018 **Consulting Engineer:**

Location	KEF1
Designation	
	SLC560/4B-1AC
Description	Axial Duct
Nominal Diameter (mm)	560
Hub Size (mm)	-
Impeller	Axial

Notes

Volume (m³/s)	2.48
Static Pressure (Pa)	200
ABS/LL Power (kW)	1.00 / 1.00
Fan Speed (r/min)	1460
FMEG/SFP	46/0.50
Sound Pressure (dB(A))	60 @ 3m
Fan Weight (kg)	50.0

Motor Power	1.10kW
Electrical Supply	230V 1ph 50Hz
FLC/Start (A)	6.38 / 37.00 (DOL)
Motor Frame	90
Motor Type	
Motor Speed	4 pole

Number off	1
Price Per Unit	£576.00
Total	£576.00

Price Extras, Ancillary Equipment and Special Features	
Matching Flange	(061B-0560) 2 x £26.00
Flex Collar / Clamp	(063-0560-MAN150) 2 x £13.00
Mounting Feet / Kit	(060B-0560) 2 x £28.00
Anti Vibration Mounts	(062-003) 4 x £5.00
Controllers	(149-TC18) 1 x £192.00
Total Ancillaries (Only)	£346.00

Total Including Ancillaries	£922.00

Total price for 1 Fans & Anc. **£922.00**

Yours faithfully

Nathan Jones

Represented by:
ELTA GROUP BUILDING SERVICES LTD
email: info@egbuildingservices.co.uk
Tel: +44 (0)1384 275800 Fax: +44 (0)1384 275810
46 Third Avenue, Pensnett Trading Estate
Kingswinford, West Midlands DY6 7US

Version 5.18.6 Copyright © 2010-17 Elta Group

A BRAND OF eg BUILDING SERVICES

Technical Data - Fan Model SLC560/4B-1AC

Location: KEF1

Designation:

Performance - Required

Air Flow :	2.48 m³/s
Static Pressure :	200 Pa
Selection Pressure:	200 Pa
Installation Type:	n/a
Air Density:	1.204 kg/m³
- Atmos. Temp:	20 °C
- Altitude: m	0 m
- Humidity:	0.0 %

Actual

Air Flow:	2.48 m³/s
Static Pressure:	200 Pa
Total Pressure:	262 Pa

Fan Data

Catalogue Code:	SLC560/4B-1AC		
Description:	Axial Duct		
Diameter:	560 mm		
Impeller Type:	Axial		
Blade Material:	-		
Speed:	1460 RPM @50 Hz		
Power, Abs:	1.00	Peak:	1.00
Efficiency Total:	65.1%	Static:	49.9%
SFP:	0.50		
Fan Weight:	50.0 kg		

Motor Data (at STP)

Motor Type:	
Electrical Supply:	230V 1ph 50Hz
Motor Frame:	90
Motor Power:	1.10kW
FLC/Start (DOL):	6.38A / 37.00A
Motor Speed:	4 pole
Motor Efficiency:	79.3%

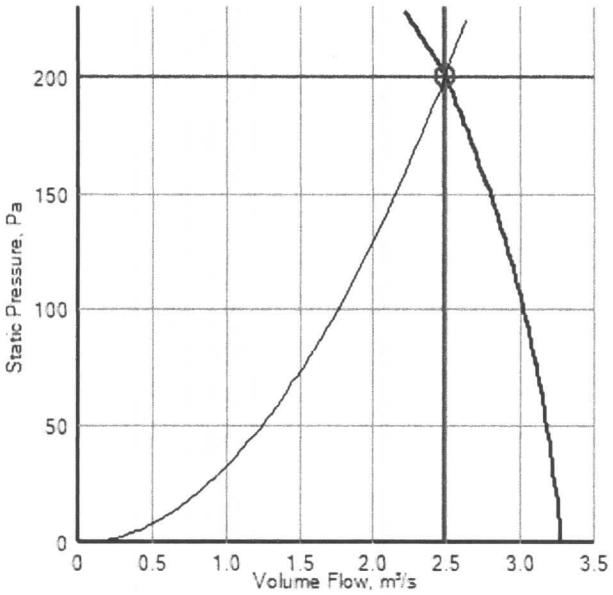

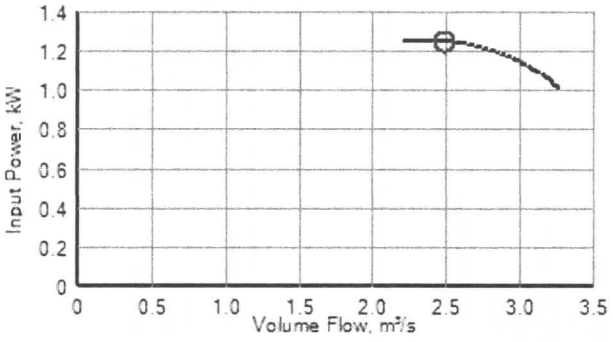

Sound Data

Spectrum (Hz):	63	125	250	500	1K	2K	4K	8K	dBW	dB(A) @ 3m
Inlet (dB):	77	74	80	75	75	74	72	66	85	60
Outlet (dB):	79	73	78	75	75	74	72	67	84	60

Sound levels are quoted as in-duct values. dB(A) values are average spherical free-field for comparative use only.

As part of our continuous improvement processes, Elta reserves the right to make changes in design or specification to products without notice.

Represented by:
ELTA GROUP BUILDING SERVICES LTD
email: info@egbuildingservices.co.uk
Tel: +44 (0)1384 275800 Fax: +44 (0)1384 275810
46 Third Avenue, Pensnett Trading Estate
Kingswinford, West Midlands DY6 7US

Version 5.18.6 Copyright © 2010-17 Elta Group

A BRAND OF eg BUILDING SERVICES

Quotation 50K-0318-260

Fans

Project: **Kitchen Extract Fan Unit**

Date: [illegible]

Consulting Engineer:

Location	Designation	Catalogue No.	Description	Qty.	Vol. (m^3/s)	Press (Pa)	Speed (r/min)	Motor Power	Motor Type	Electrical Supply	Inlet Sound Spectra(dBW) 63	125	250	500	1K	2K	4K	8K	SPL (dBA)
KEF1		SLC560/4B-1AC	Axial Duct	1	2.48	200	1460	1.10kW		230V 1ph 50Hz	77	74	80	75	75	74	72	66	60@ 3m

Represented by:
ELTA GROUP BUILDING SERVICES LTD
email: info@egbuildingservices.co.uk
Tel: +44 (0)1384 275800 Fax: +44 (0)1384 275810
46 Third Avenue, Pensnett Trading Estate
Kingswinford, West Midlands DY6 7US

Version 5.18.6 Copyright © 2010-17 Elta Group

A BRAND OF eg BUILDING SERVICES

Technical Data - Fan Model SLC560/4B-1AC

Location: KEF1 **Designation:**

Energy Related Product Data

Overall Efficiency:	40.3%
Measurement Category:	C
Efficiency Category:	Static
FMEG:	46
Specific Ratio:	1

At Maximum Efficiency Point

Input Power:	1.26 kW
Air Flow:	2.33 m³/s
Pressure:	217 Pa
Speed:	1460 r/min

Drawing for Fan model SLC560/4B-1AC

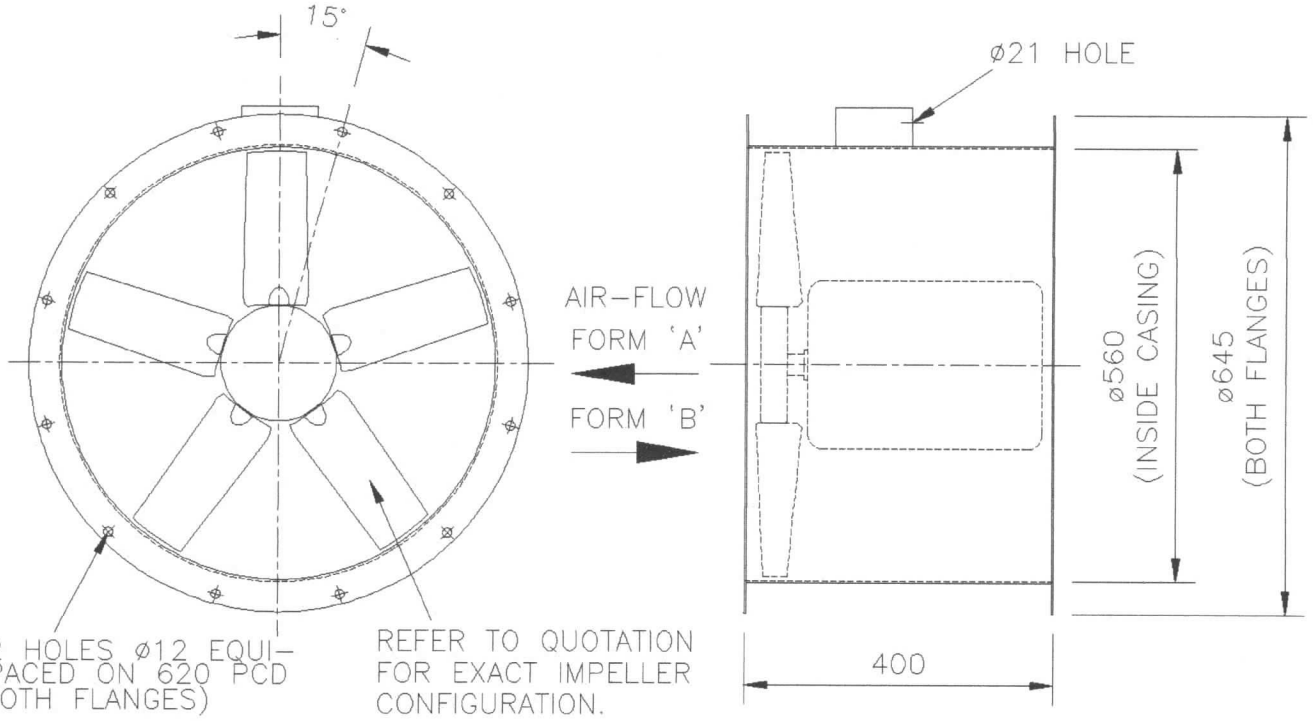

As part of our continuous improvement processes, Elta reserves the right to make changes in design or specification to products without notice.