Planning, Design and Access Statement

187 Kirkway
Middleton
Manchester
M24 1LW

13 October 2020

Change of Use from a shop (Use Class E) to a hot food takeaway (Sui Generis Use) with internal and external alterations

Sanderson Weatherall

Contents

1. Introduction 1

2. Site Location and Description 2

3. Proposed Development 3

4. Relevant Planning History 5

5. Planning Policy Context 6

6. Design and Access Considerations 15

7. Planning Justification 17

Principle of Development 17

8. Conclusion 24

9. Appendices 25

1. Introduction

1.1. This planning, design and access statement, incorporating a flood risk assessment, has been prepared to support an application for full planning permission for the change of use of 187 Kirkway, Middleton (hereafter 'the application site') from a shop (Use Class E) to a hot food takeaway (Sui Generis Use) with internal and external alterations.

1.2. By way of context, the applicant was founded in 1984 in Indiana, USA. The company has grown substantially since then and is now one of the largest pizza groups in the world with over 4,000 outlets in 36 countries. Most of the outlets are owned and operated under a franchise agreement and can provide up to 20 jobs. In the UK Papa John's (GB) Ltd operate in excess of 100 stores nationwide.

1.3. The purpose of this statement is to describe the site and its location; describe the application proposal; explain the relevant planning history; identify the policy context; explain design and access considerations; and assess the extent to which it complies with the Development Plan and other material considerations.

1.4. The application is accompanied by a Location Plan, Elevations and Floor Plans.

1.5. The remainder of this report follows the structure set out below:

- Section 2 – Site Location and Description;
- Section 3 – Proposed Development;
- Section 4 – Relevant Planning History;
- Section 5 – Planning Policy Context;
- Section 6 – Design and Access Considerations;
- Section 7 – Planning Justification; and,
- Section 8 – Conclusions.

2. Site Location and Description

Application Site Location

2.1. The application site is located on the east side of Kirkway within the designated 'Kirkway/Mainway, Alkrington' Local Centre, as defined on the Council's Proposals Map. The application site was previously part of a larger unit (No.187-189) but it has subsequently been sub-divided into two separate units such that there are now fifteen commercial units in the centre, including a variety of shops, two cafes (The Korner Kitchen and Mainway Café), a Tesco Express, library and bar & grille (Thornberries) with flats on the upper floors. There is a wide forecourt and pavement at the front of the centre beyond which is a dedicated car park for visitors and at the rear is a service road. There are stairwells at the rear of the building, which lead to the flats on the upper floors.

2.2. There is a bus stop opposite the centre on the west side of Kirkway, which serves several bus routes to and from the town centre and the surrounding suburbs.

2.3. The nearest residential properties are the flat(s) on the upper floors of the parade. The entrances to the flats are located at the rear of the building.

2.4. The application site is not located in an area at risk of flooding.

Application Site Description

2.5. The application site comprises a centrally located ground floor unit in a three-storey building, which has singe storey elements at the rear, beyond which is a parking and service area. The shopfront comprises an aluminium framed entrance door with two full height display windows. There is a fascia signage board and separate canopy above the entrance door and display windows. The building is neither statutorily nor locally listed.

2.6. The floor area of the application site is approximately 104.0sq m (1,119.0sq ft).

2.7. The application site is currently vacant but was last used by the Co-Operative as a supermarket (formerly Use Class A1, now Use Class E) together with No.189 Kirkway when the units were combined.

3. Proposed Development

3.1. The proposed development comprises the change of use of 187 Kirkway from a shop (Use Class E) to a hot food takeaway (Sui Generis Use) along with internal and external alterations. The Proposed Floor Plan illustrates the internal layout of the pizza takeaway operation, namely: a customer order and waiting area at the front of the premises, beyond which would be a kitchen, then a cold store with a washing-up area, control hub (dispatch area) staff WC at the rear.

Internal Alterations

3.2. Internal works include the removal one WC at the rear to allow for the creation of the control hub.

3.3. Other internal works to support the use as a pizza takeaway include the installation of a customer reception area and sales counter, gas oven, extraction system comprising stainless steel extract hood, galvanised ductwork and fans, preparation tables, refrigerators, freezers, cold store, sinks and dispatch tables.

Extraction and Ventilation System

3.4. Full details of the proposed extraction and ventilation system are contained in a separate document, which has been submitted in support of the application ('Supporting Information on the Proposed Extraction System and Plant'). In summary, a canopy would be installed over the entire cooking area with an extraction system to remove heat produced from the pizza oven; this would comprise ducting, which would contain 2x in-line 'active' carbon filters and would be lined with acoustic material and lead to a flue, which would exit the rear of the property at low level via an extraction grille fixed flush with the brickwork.

3.5. 2no. condenser units are proposed to be fixed to the rear wall of the property. A second grille is also proposed to be located at the rear of the property that is, to provide fresh air intake into the premises, and it will be in the same location as one of the slit windows.

3.6. The extraction system has been specifically designed to Papa Johns' specifications and reflects the fact that all products are oven cooked using conveyor ovens only. The extraction system removes heat produced from the oven and an air supply system would remove oven fumes and ventilates the premises.

Shop Front

3.7. The existing shopfront will be refurbished and finished in RAL9005 coloured paint.

Hours of Operation and Service Deliveries to the Premises

3.8. Planning permission is sought for the use to operate from 11:00am to 11:00pm seven days a week and on Bank Holidays.

3.9. The applicant has a centrally controlled logistics operation to deliver fresh dough and other products necessary to meet the business needs of each store. The delivery model is company-wide and based on three deliveries per week; two deliveries from the main distribution centre, using fixed-based tend tonne delivery vehicles; and one by the drinks supply partners, Coca Cola, utilising a 7.5 tonnes non-articulated delivery vehicle.

3.10. Food deliveries to the store would be made twice a week and on regular days to maintain stock levels in the store. Drinks deliveries would be made once per week. It is proposed that the deliveries of produce to the premises will be on the service road at the rear of the property.

3.11. Home delivery vehicles associated with the proposed use would make use of the parking space at the rear. Nevertheless, as most orders are for home delivery and in view of the peak business hours, it is not expected that the proposed change of use would have an adverse impact on the operation of the local road network or highway safety.

Refuse Storage and Collection Arrangements

3.12. The takeaway operator has a standard contract with a pest control agency to control and manage the presence of vermin around their premises. To prevent nuisance from pests, refuse from the proposed operation would be stored in two Biffa lockable bins which would be sealed to prevent pests gaining access. These would be kept at the rear of the application site; one refuse bin would be for general waste and one for cardboard recycling. Both bins would be emptied on a weekly basis; contractors would retrieve the bins, empty them and replace them thereafter.

4. Relevant Planning History

4.1. The most recent planning application record for the property on the Council's online planning portal is **18/01311/FUL**, which is a planning permission for the unit and the neighbouring property (No.189 Kirkway). Planning permission was granted on 5 April 2019 for *'Change of use of ground floor from Class A1 (Retail) to Class A3 (Café/Restaurant.'*

4.2. No extraction equipment was approved because it was a speculative application with no end user identified and so only the principle of the A3 use was sought. Initially, a vertical flue stack had been proposed at the rear, but this aspect generated numerous objections so was subsequently removed.

4.3. Condition 3 limits the opening hours as follows:

> *"The use hereby permitted shall not be open to customers outside the following times: 08:00 hours to 21:00 hours Monday to Friday, 09:00 hours to 20:00 hours and 09:00 hours to 18:00 hours on Sundays and Bank Holidays."*

4.4. There was no condition attached to the planning permission to prevent takeaways from the café/restaurant nor to preclude the use of aggregators, such as Deliveroo and Uber Eats, from serving the premises and parking in the vicinity of the property.

4.5. It is understood that the planning permission has not yet been implemented so the property's lawful use remains a shop (formerly Use Class A1, now Use Class E following amendments to the Use Class Orders, which came into force on 1 September 2020).

5. Planning Policy Context

5.1. Section 38(6) of the Planning and Compulsory Purchase Act 2004 requires planning applications to be determined in accordance with the Development Plan unless material considerations indicate otherwise. Section 39 of the Act requires decision makers to exercise their functions with the objective of contributing to achievement of sustainable development.

5.2. The Statutory Development Plan for an individual site comprises those Local Planning Documents which have been the subject of Examination in Public or testing through Public Inquiry and are adopted having been through due processes.

Development Plan Policy

5.3. The Statutory Development Plan most relevant to the proposed development comprises the following documents:

- Rochdale Core Strategy (adopted October 2016); and,
- Rochdale Borough Unitary Development Plan - Saved Policies (adopted June 2006).

Rochdale Core Strategy

5.4. The Rochdale Core Strategy (CS) was adopted by the LPA in October 2016. The CS sets out the broad vision for the growth and development of the Borough and detailed development control policies for the period to 2030. The property is located within the designated 'Kirkway/Mainway, Alkrington' Local Centre, as defined on the Proposals Map that accompanies the (CS). The policies of most relevance to the proposed development are identified below.

5.5. **Policy E1** (Establishing thriving town, district and local centres) states:

> *"We will focus retail, leisure, cultural, office, residential and other development to promote the viability and vitality of all the borough's town centres to maintain them as thriving and sustainable centres and the preferred shopping and leisure destinations for people living, working and visiting the borough. We will also ensure the provision of a hierarchy of accessible district and local centres and shops that meets people's daily shopping needs..."*

5.6. **Policy C6** (Improving health and well-being) states:

> *"We will improve people's health and well being and reduce health inequalities by:*

- *Creating an economic, physical and social environment which promotes and supports healthy lifestyles;*
- *Supporting and promoting accessible new health facilities and services in town centres and local centres; and*
- *Focusing the above actions in areas of deprivation, poor health and/or greatest need.*

We will achieve this through:…

…d. Not allowing the over concentration of takeaway food premises where they may impact adversely on the amenity of residents and/or encourage unhealthy eating habits;…"

5.7. **Policy P3** (Improving design of new development) states:

"We will require all new developments, including associated landscaping, regardless of location in the borough, to adhere to high standards of design. The following design principles should be adhered to wherever relevant:

- *Enhance the borough's identity and sense of place, by respecting context where it is positive and having regard to the scale, density, massing, height, layout, landscape, materials and access of surrounding buildings and areas in general;*
- *Ensure that buildings contribute positively to the townscape, and are well proportioned;…"*

5.8. **Policy G9** (Reducing the impact of pollution, contamination and land stability) states:

"We will reduce all forms of pollution, contamination and land instability in the borough, by:

a. *Focusing on measures that reduce air pollution in Air Quality Management Areas, and other areas where pollution levels are unacceptable, particularly around motorways and main roads;*

b. *Requiring that development does not have impacts that lead to an unacceptable increase in air, water, noise, light or other pollution;*

c. *Ensuring sensitive new developments such as housing, schools and hospitals are not adversely affected by existing sources of pollution such as roads and certain types of industry;*

d. *Requiring a Low Emissions Strategy (LES) where development requires a Transport Assessment, and in other circumstances as appropriate;*

e. *Requiring that any risks arising from contaminated land or land instability, and appropriate actions to address these risks, are identified prior to any development taking place on that land and the identified actions taken;*

f. *Requiring that any risk to surface water and ground water resources from the disturbance of contaminated land be ascertained and preventative measures devised and carried out; and*

g. *Using planning conditions or obligations to control pollution from new development, or the impact of pollution on new development."*

5.9. **Policy T2** (Improving accessibility) states:

"We will improve accessibility by locating development where good access to public transport is available or can be provided, backed by measures to reduce the need for travel and effective provision for cyclists, pedestrians and people with impaired mobility. Development will be appropriately located to minimise the need to travel by car and the number and length of car trips made to access local amenities. Transport improvements will focus access to priority regeneration areas, e.g. town centres, housing regeneration areas and economic growth corridors. We will do this by:…

…In all circumstances, the safety, accessibility and amenity of those who live or have business in the area will have priority, while providing reliable journey times for those travelling through…"

5.10. **Policy DM1** (General development requirements) states:

"All development proposals, including changes of use of land and buildings, extensions and alterations, will be expected to demonstrate that they:

a. *Are of high quality design and take the opportunity to enhance the quality of the area;*

b. *Are compatible with surrounding land uses, both in terms of its impact upon those uses and the impact of the surrounding land uses upon the amenities of future residents / users;*

c. *Do not adversely affect the amenity of residents or users through visual intrusion, overbearing impact, overshadowing or loss of privacy;*

d. *Mitigate against any impacts due to noise, air, dust, light and odour pollution, traffic generation or inadequate access, where such mitigation is identified as being necessary;*

e. *Provide satisfactory vehicular access with adequate parking, manoeuvring, and servicing arrangements taking into account of the proposed use and location;*

f. *Do not have an adverse impact on health, through its impact or the effect of existing problems e.g. land contamination, or poor air quality;*

g. *Provide, or demonstrate the availability of, the service and community infrastructure necessary to meet local needs e.g. local shops, community, leisure and sport facilities and provision of open space;*

h. *Minimise opportunities for crime against people or property;*

i. *Take account of ground conditions including unstable or contaminated land - where a potential risk exists, a survey should be carried out and any necessary remedial measures identified and carried out;*

j. *Incorporate, where appropriate, high quality landscape schemes;*

k. *Have assessed whether the development may be affected by ground instability;*

l. *Have considered the availability of water and wastewater infrastructure, and any need for additional capacity; and*

m. *Do not lead to impacts detrimental to the conservation interests of European Protected Sites."*

Rochdale Borough Unitary Development Plan – Saved Policies

5.11. The Rochdale Unitary Development Plan (UDP) was originally adopted by the Council in June 2006. Although a number of policies have been replaced by those in the CS, others have not been replaced so have been 'saved' and continue to form part of the Development Plan until such time as they are replaced by up to date policies. The policies of most relevant to the proposed development are identified below and overleaf.

5.12. **Saved Policy G/D/1** (Defined Urban Area) states:

"THE BOUNDARY OF THE URBAN AREA IS DEFINED ON THE PROPOSALS MAP. OUTSIDE THIS AREA, ONLY DEVELOPMENT THAT IS COMPATIBLE WITH THE POLICIES IN THIS CHAPTER WILL BE ACCEPTABLE.

THE DEFINED URBAN AREA INCORPORATES ONE MINOR BOUNDARY CHANGE FROM THE CURRENT DEVELOPMENT PLAN, AT HAUGH FOLD, NEWHEY. (SEE PROPOSAL D/3 BELOW)"

5.13. **Saved Policy G/S/1** (Hierarchy and role of centres) states:

"THE CENTRES LISTED BELOW WILL BE PROMOTED AS THE PRINCIPAL LOCATIONS FOR SHOPPING, OFFICES, OTHER COMMERCIAL USES, ENTERTAINMENT, LEISURE, CULTURAL AND COMMUNITY FACILITIES WITH THE SCALE OF DEVELOPMENT APPROPRIATE TO THE CENTRE BEING RELATED TO ITS POSITION IN THE HIERARCHY OF CENTRES.

THE HIERARCHY OF CENTRES WITHIN THE BOROUGH, DEFINED BY THEIR SCALE AND FUNCTION, IS:

- *MAIN TOWN CENTRE*:* *ROCHDALE*
- *TOWN CENTRES*:* *MIDDLETON, HEYWOOD, LITTLEBOROUGH*
- *DISTRICT CENTRE*:* *MILNROW*
- *LOCAL CENTRES*:* *(SEE APPENDIX B)*

(SHOWN ON THE PROPOSALS MAP)*

TO ENSURE THE CONTINUED VITALITY AND VIABILITY OF THE ABOVE CENTRES, NEW RETAIL AND LEISURE DEVELOPMENT SHOULD BE SITED IN ACCORDANCE WITH THE PRINCIPLES OF THE SEQUENTIAL APPROACH. APPLICANTS SHOULD DEMONSTRATE THAT NO SUITABLE SITES OR BUILDINGS THAT ARE SEQUENTIALLY PREFERABLE ARE AVAILABLE OR LIKELY TO BECOME AVAILABLE WITHIN A REASONABLE PERIOD OF TIME. THE SEQUENCE FOR CONSIDERING SITES IS AS FOLLOWS:

1. TOWN CENTRES

2. EDGE OF TOWN CENTRES (INCLUDING EXISTING EDGE-OF-CENTRE RETAILPARKS OUTLINED BELOW)

3. DISTRICT CENTRE

4. LOCAL CENTRES

5. ELSEWHERE."

5.14. **Appendix B** identifies 'Kirkway at Mainway, Alkrington, Middleton' as 1 of 38 Local Centres within the Borough.

5.15. **Saved Policy S6** (District Centres, Local Centres and Linear Commercial Areas) states:

"In Milnrow District Centre and in local centres and linear commercial areas (as identified on the Proposals Map and listed in Appendix B) the development of, or change of use to, shops, financial and professional services, food and drink outlets, offices, community and cultural facilities and other uses appropriate to a district or local centre will be permitted provided that:

a) It will be of a scale and character appropriate to the size, role and function of the centre or area; and

b) It will be compatible with surrounding land uses and will not harm local residential amenity.

For retail development over 500 square metres gross, the applicant should also demonstrate that the sequential approach to site selection has been adopted and that no suitable sites or buildings that are sequentially preferable are available or likely to become available within a reasonable period of time.

In local centres and linear commercial areas the conversion of residential premises to commercial use will only be permitted where there are no suitable vacant premises available in the centre or immediate vicinity, or it can be demonstrated that the property is no longer suited to residential use due to poor amenity.

The conversion or redevelopment of vacant commercial premises to residential use will only be permitted in local centres that have a high overall vacancy rate and where it will assist regeneration."

Material Considerations

5.16. Material considerations include the National Planning Policy Framework, supplementary planning documents and permitted development rights.

National Planning Policy Framework (The Framework)

5.17. The Framework, revised in February 2019, states that the purpose of the planning system is to contribute to the achievement of sustainable development by performing an economic role, social role and environmental role. Critically, the Framework requires these roles to be delivered simultaneously through the planning system, delivering mutually dependent benefits. The Framework places a presumption in favour of sustainable development **(Paragraph 10)**.

5.18. The Framework clarifies that the presumption in favour means proposals that accord with an up-to-date development plan should be approved without delay, or *"where there are no relevant development plan policies, or the policies which are most important for determining the application are out-of-date",* planning permission should be granted unless, *"…policies in the Framework that protect areas or assets of particular importance provides a clear reason for refusing the development proposed"* (Footnote 6), or *"any adverse impacts of doing so would significantly and demonstrably outweigh the benefits, when assessed against the policies in this Framework taken as a whole"* **(Paragraph 11)**.

5.19. **Paragraph 85** outlines the approach that local authorities and their policies should take towards supporting the role that town centres play at the heart of local communities, done through placing emphasis on the following points, amongst other things:

a) *"Define a network and hierarchy of town centres and promote their long-term vitality and viability – by allowing them to grow and diversify in a way that can respond to rapid changes in the retail and leisure industries, allow a suitable mix of uses (including houses) and reflects their distinctive characters;*

b) *Define the extent of town centres and primary shopping areas, and make clear the range of uses permitted in such locations, as part of a positive strategy for the future of each centre…"*

5.20. **Paragraph 86** highlights the structure that planning authorities should follow in assigning where uses are best set within the hierarchy of centres, edge-of-centres and out of town locations. The policy states *"… main town centre uses should be located in town centres, then in edge of centre locations; and only if suitable sites are not available (or expected to become available within a reasonable period) should out of centre sites to be considered."*

5.21. **Paragraph 109** outlines that developments should only be prevented or refused on highway grounds if there would be an *"unacceptable impact upon highway safety, or the residual cumulative impacts on the road network would be severe."*

5.22. **Paragraph 180** states that in planning decisions the effects of new development must be considered in an appropriate location considering the likely effects of pollution on health and living conditions.

5.23. **Annex 2** defines 'Main Town Centre Uses' as *"Retail development (including warehouse clubs and factory outlet centres); leisure, entertainment and more intensive sport and recreation uses (including cinemas, restaurants, drive-through restaurants, bars and pubs, nightclubs, casinos, health and fitness centres, indoor bowling centres and bingo halls); offices; and arts, culture and tourism development (including theatres, museums, galleries and concert halls, hotels and conference facilities)."*

Guidelines and Standards for Hot Food Takeaway Uses Supplementary Planning Document (SPD)

5.24. This Supplementary Planning Document (SPD) was initially adopted by the Council in April 2015. It was subsequently updated in February 2017.

5.25. It provides detailed policies on the following matters: Hot food takeaways and schools (Policy HF1); Extraction of odours and noise abatement (Policy HF2); Appropriate concentrations of hot food takeaways and clustering (Policy HF3); Hours of opening (Policy HF4); Disposal of Waste (Policy HF5); and, Litter (Policy HF6).

5.26. **Policy HF1** imposes a 400m restriction buffer around secondary schools and suggests the establishment of new hot food takeaways around secondary schools will not normally be supported. The policy goes on to confirm this restriction does not apply to hot food takeaways within defined centres (Paras 4.5).

5.27. **Policy HF3** sets the following criteria where hot food takeaways will not normally be allowed:

i. More than 5% of the total ground floor units within a defined Primary Shopping Area being hot food takeaways;

ii. More than 10% of the total ground floor units within a defined Secondary or Central Shopping Area being hot food takeaways;

iii. More than 20% of the total ground floor units within an area of a defined centre, outside the above areas, being hot food takeaways;

iv. More than two hot food takeaways being located adjacent to each other; and

v. Any fewer than two non-A5 units between hot food takeaways.

Permitted Development Rights

5.28. *The Town and Country Planning (Use Classes) (Amendment) (England) Regulations 2020* came into force on 1st September 2020. These revoked the following use classes: A1 shops; A2 financial & professional services; A3 restaurants & cafes; A4 drinking establishments; A5 takeaways; B1(a) offices; B1(b) research & development; B1(c) light industrial; D1 non-residential institutions; and, D2 assembly & leisure. A new Use Class E (Commercial, Business and Service) will be created; this will entail existing A1, A2, A3 and B1 classes and part of D1 and D2 classes.

5.29. Consequently, the application site can be converted to any use falling within Use Class E (e.g. any former A1, A2, A3 and B1 use and some D1 and D2 uses) and it would not require planning permission because it would not constitute a material change of use. A 24hour gym is one such use.

5.30. Notwithstanding the above, there will be a transitional period until 31 July 2021 where the changes to the Use Classes Order will not be applied to the General Permitted Development Order (GDPO). In other words, the GPDO will operate until the end of July 2021 as if the Use Classes Order had not been modified. This means the following permanent changes of use relevant to existing A1 premises still apply at the application site:

- Part 3 Class G which enables shops to be changed to financial and professional services with up to 2 flats.

5.31. These fall-back positions reinforce the Government's commitment to securing economic growth in order to create jobs and prosperity. Planning authorities can only prevent fall-back positions from coming forward if there is either an Article 4 Direction, or a restrictive condition, prohibiting the specific use. Neither applies at the application site.

6. Design and Access Considerations

Use

6.1. The proposed use of the property as a hot food takeaway is a sui generis use meaning it is no longer a class of use governed by the Town and Country Planning (Use Classes) Order 1987 (as amended).

Amount

6.2. The extent of the application proposal is limited to utilising the existing footprint of the property. Kitchen equipment, customer service paraphernalia and a cold store will be installed inside the property. Two condenser units and two aluminium louvre grilles, one for flue extract, and the other for the fresh air intake grille will be attached to the rear elevation of the building.

6.3. The only other external alterations are the refurbished shopfront which will be finished in RAL9005 coloured paint.

Layout

6.4. A customer order and waiting/dining area is proposed directly behind the front door of the premises. Beyond this area would be the kitchen and cold store. To the rear would be a washing up area, control hub (dispatch area) and staff WC.

Scale

6.5. No extensions to the building are proposed.

Landscaping

6.6. No landscaping is proposed because all development is either internal or relates to the fixing of two louvre grilles and two condenser units to the rear wall of the property.

Appearance

6.7. The renovated shopfront will be very similar in appearance to the existing because there will be no changes to the size of the display windows and the entrance door.

6.8. Locating the flue extract louvre grille where a slit window is currently located means it will be imperceptible.

6.9. For the avoidance of doubt, Papa Johns' signage will be subject to a separate application for advertisement consent should the proposed change of use be granted planning permission.

Access

6.10. Customer access into the proposed takeaway will be via the existing entrance door at the front of the property, adjacent to the car park.

6.11. A bell at the entrance will be installed should any customers with restricted mobility want to collect their goods, which could then be given to them at the door.

6.12. Notwithstanding this, it is expected that most customers will place orders and request deliveries to their homes or other venues, which would reflect how the applicant's other stores operate within the UK. Again, in reflection of the applicant's other stores, it is anticipated that a high proportion of collections will be made after 18:00 (**Table 1 refers** - overleaf).

6.13. It should be noted that the application premises are located within a highly sustainable urban location which is close to many potential customers. Additionally, there are several bus stops within a short walk from the application site.

7. Planning Justification

7.1. This section of the Statement sets out the justification for the proposed change of use when considered against the relevant planning policies and other material considerations.

7.2. The key issues arising from this proposal are as follows:

- Principle of development;
- Impact on the amenity of adjoining occupiers and nearby residents;
- Design considerations;
- Highway safety; and,
- Other benefits and the planning balance.

7.3. Each of these issues is now discussed in turn below and overleaf.

Principle of Development

7.4. The application site is within the Defined Urban Area where development is generally directed in preference to greenfield land. Thus, changing the use of an existing commercial unit in an established retail parade is not unusual and the principle is in accordance with Saved Policy G/D/1.

7.5. Additionally, the application site comprises one side of a former Co-Operative supermarket (formerly A1 use class, now E use class) that has been vacant for nearly two years and is within the designated Kirkway/Mainway, Alkrington Local Centre. The change of use of the property from a long-term vacant supermarket to a hot food takeaway will be beneficial to the area because it will introduce an additional active frontage in the street, which is particularly noteworthy given No.189 next door (the other side of the former Co-Operative supermarket) remains empty, activity during both the day and evening and generate linked trips with other uses in the vicinity. It therefore follows that the proposed takeaway will sustain and enhance the viability and vitality of the Local Centre whilst increasing diversity of uses. Accordingly, the principle of the proposed development is in accordance with Policy E1 and Saved Policy G/S/1.

7.6. Saved Policy S/6 is supportive of changes of use to food and drink use, amongst other things, provided it would be of a scale and character appropriate to the size, function and role of the centre and would be compatible with surrounding land uses and would not harm residential amenity. In this regard, it should be noted that the proposed takeaway would have a floor area of approximately 104sq m, which is not significantly bigger than a typical premises' one would expect to see operating

in a Local Centre. There is not an over-dominance of a particular use, including takeaways, at present so the proposal is considered suitable for the local centre. By limiting the closing time to 11pm, which is only one hour later than the Tesco Express two doors away and one hour later than the last use of the property, there will be no adverse impacts on residential amenity. For these reasons, the principle of the proposed development is also in accordance with Saved Policy S/6.

7.7. Additional in-principle support is provided by Policies HF1 and HF3 within the Supplementary Planning Document (SPD) on Hot Food Takeaways. Policy HF1 supports hot food takeaways so long as they are not within 400m of a secondary school and in this instance, the application site is not located within 400m of any secondary school and even if it was, the exclusion zone does not apply to designated centres, such as the Kirkway/Mainway, Alkrington Local Centre. Furthermore, Policy HF3 seeks to avoid concentrations of hot food takeaways and clustering and this will be avoided at the application site because there are no existing takeaways in the Local Centre. For this reason, the proposed development is also in compliance with Policy C6, which also seeks to avoid an over concentration of hot food takeaways.

7.8. National planning policy seeks to direct main town centre uses to existing centres to protect the vitality and viability of existing centres. Paragraph 86 of The Framework focuses on the sequential approach to town centre uses. The proposed takeaway is in accordance with this aspect of the Framework because the application site is wholly located inside the boundary of a Local Centre.

7.9. The General Permitted Development Order reaffirms the Government's commitment to improving the viability and viability of towns and avoiding units being vacant, unused or under-utilised for lengthy periods of time. The ability to convert the building to a financial and professional service and up to two flats on a permanent basis, and any E Use Class, are material considerations in determining this application. In summary, the conversion of the building to any of those alternative uses has the potential to affect the vitality and viability of the Local Centre to a greater degree than its occupation for the proposed takeaway use.

7.10. Overall, it is considered that the principle of a new hot food takeaway in this location is entirely acceptable.

Impact on the Amenity of Adjoining Occupiers and Nearby Residents

7.11. Policy DM1 seeks to avoid unacceptable harm on the amenities of adjoining and nearby occupiers as well as mitigating against the impacts of noise and odour pollution, amongst other things. The latter is also a requirement of Policy G9 and additional clarification for both policies is provided within the Hot Food Takeaway SPD. Kirkway/Mainway, Alkrington Local Centre is a thriving shopping destination that provides the day to day needs of the local community. It therefore supports a relatively high level of patronage seven days a week and the coming and going of

vehicles on a continual basis, both in the car park at the front of the parade and the service road at the rear. All the existing commercial uses in the centre, including the Tesco Express, cafes, shops and Thornberries Bar & Grille, therefore already generate traffic and associated service and delivery activities.

7.12. Nevertheless, noise associated with the proposed takeaway operation will be mainly contained to the inside of the application premises where podded silencers will be installed in conjunction with the extraction fans to reduce noise break-out. The acoustic properties of the building envelope also mean the fans will be further insulated from noise breakout to neighbouring properties. The only external feature that generates noise comprises the 2no. condenser units that will be fixed to the rear of the single storey addition.

7.13. The applicant's Noise Management Plan (**Appendix 1** refers) demonstrates how noise from customers, delivery vehicles and employees will be managed.

7.14. The proposed use is restricted to the preparation and cooking of pizza and other sundry foods, such as potato wedges, yet of these products only the pizzas will be prepared on site. The remaining products come pre-packaged and will be stored on site before being cooked. Significantly all products will be oven-cooked and therefore no deep frying will take place inside the premises. Guidance from the Department of Environment, Food and Rural Affairs1 (Defra) identifies pizza establishments as producing a 'moderate' odour concentration and a 'moderate' grease concentration. By being designed to meet Defra's minimum standards, the proposed system is in accordance with SPD Policy HF2.

7.15. Yet a modern ventilation system is still required (and is therefore proposed) in conjunction with the proposed takeaway use to remove any cooking odours or fumes, treat them and exhaust them via an extraction grille fixed to the rear of the single storey addition. It is not near to any third-party properties, including their external terraces, nor the communal walkway, as shown on the submitted Section Plan.

7.16. SPD Policy HF5 requires details for the disposal of waste to be submitted with planning applications. Given the limited extent of floor area within the application site and the absence of a secure external yard, it will not be possible to store the bins inside the premises (2no. bins each with a 1,100 litre capacity; see specification details – **Appendix 2** refers). Instead they would be positioned in the service area at the rear of the property. This is behind the rear door of the premises so would be convenient for employees. It would also be convenient for collections as it would be adjacent to the service road. **Appendix 2** explains how the bins will be robust. The fact

[1] Netcen on behalf of DEFRA, January 2005, *Guidance on the Control of Odour and Noise from Commercial Kitchen Exhaust Systems*

the whole of the top of the bin is a lid means they can be easily cleaned, whilst their width and height is such that it can easily be lifted onto the back of a refuse truck for emptying, the wheels allow it to be easily manoeuvred and the fact they will be padlocked shut and the wheels can be locked means they will be secure and can be safely positioned away from the stairwell that leads to the upper floor flats. They will therefore not be kept in a location that would be obstructive to occupants of the flats or to vehicles travelling along the service road. Accordingly, the proposed solution will satisfy SPD Policy HF5.

7.17. In the light of the upper floor flats, the applicant's usual hours of operation with a closing time of 01:00am on Fridays and Saturdays and 11:00pm on all other days are not proposed in this case. Instead, a closing time of 11:00pm is sought seven days a week and on Bank Holidays. This would match the closing time of Thornberries Bar & Grille so would allow the proposed takeaway to compete with it on an equal footing assuming it serves dishes to takeaway. Given the lawful use of the property has reverted to its last use, it is material that this had a closing time of 10:00pm. A 10:00pm closing time also applies to the neighbouring unit at No.189, which is currently vacant, because it last operated as one side of the Co-operative supermarket with the application site. The Tesco Express two doors away also closes at 10:00pm. All these uses demonstrate that night-time uses already occur, or have previously occurred, at the Local Centre and from the application site. It is therefore considered that allowing the application site to operate for one hour longer into the evening than the nearby Tesco Express but no later than Thorberries Bar & Grille is unlikely to result in adverse impacts on the upper floor flats. In fact, the proposed hours of operation are 21 hours less per week (84 hours in total) than its former use (and No.189) as a Co-operative supermarket, which opened from 07:00am to 11:00pm seven days week (105 hours in total). This is material, particularly when most working people are likely to still be in their homes at 7am in the morning. Finally, it is also material that the application site (No.189 Kirkway and all other premises where former A1, A2, A3 uses operate) can now be converted to any use falling within Use Class E and hours of operation cannot be controlled. A 24hour gym is one such use. All the above points indicate the proposed hours of operation are appropriate in accordance with SPD Policy HF4.

7.18. Based on the above points, the applicant contends there would be no adverse impacts on the amenities of adjoining and nearby occupiers and on this basis, the proposed development is in accordance with Policies DM1, G9 and the Hot Food Takeaway SPD.

Design Considerations

7.19. In accordance with national guidance, new development should be compatible with and contribute to the distinctive character and amenity of the area in which it is located and create safe and secure environments.

7.20. Compliance with the design requirements of Policies DM1 and P3 will be achieved because the extract flue will be a grille attached flush to the brickwork on the rear of the building rather than a bulky and incongruous flue. The condenser units will be located above the bins such that they will not project outwards beyond the refuse area and represent significant visual clutter. Accordingly, none of the external ventilation and extraction plant and associated equipment will be visually intrusive to the character of the host building.

7.21. Refurbishing the existing shopfront with paint will improve its appearance and its contribution to the street scene.

7.22. Overall, it is considered that all the alterations to the exterior of the property will be appropriate to its context and therefore in accordance with Policies DM1 and P3.

Highway Considerations

7.23. In terms of service deliveries to the application site, the applicant has a centrally controlled logistics operation delivering fresh dough and other products necessary for the business needs of each store. The store delivery model across the company is based on three deliveries per week; two deliveries are from the main distribution centre, using fixed-bed ten tonne delivery vehicles and one is by the drinks supply partner, Coca Cola, utilising a 7.5 tonne non-articulated delivery vehicle.

7.24. Food deliveries would be made twice a week, on regular days, to maintain stock levels in the store and Coca Cola would deliver once a week. Deliveries would be accepted from the rear service road. These would be timed to occur early in the morning and on each occasion; delivery vehicles need only be present for around 20 minutes.

7.25. Indicative figures derived from the applicant's other outlets outside of London suggest that the proposed use will generate low traffic movements. On average, 60-70% of orders are for home delivery and the busiest time for collections is the evenings, as illustrated in **Table 1**.

Table 1: Delivery dispatch times

	11am – 12	12 – 1pm	1pm – 6pm	6pm – 9pm	After 9pm
Day of week/ Time of Day	Morning Orders	Lunch Orders	Afternoon Orders	Peak Orders	Post 9PM Orders
Monday	0	0	5	10	0
Tuesday	0	0	4	8	1
Wednesday	0	0	3	11	2
Thursday	0	0	4	6	3
Friday	0	0	12	37	6
Saturday	0	1	14	40	4
Sunday	0	1	14	16	5

7.26. **Table 1** shows 149 delivered orders are between 18:00-23:00 in a week which results in 21.28 delivery orders in the evening and 4.26 delivery orders an hour. Due to an average of 1.5 orders per delivery, this creates 5.68 traffic movements (deliver vehicles going to and from the unit) an hour between 18:00-23:00 a day. This level of movement is not considered to be significant.

7.27. It is envisaged that the small proportion of customers that do collect their orders would park in the car park at the front of the parade. As noted above, most orders would be for home delivery from the proposed unit. The application site is also accessible by public transport with bus stops nearby.

7.28. The proposed development therefore fully accords with the relevant national and Local Plan policies in relation to the operation of the highway network including Policies T2 and DM1.

Other Benefits and The Planning Balance

7.29. The Framework confirms the presumption in favour of sustainable development and confirms that social, economic and environmental issues must be balanced and integrated, at the same time, by the decision-taker when determining planning applications.

7.30. Decisions should be assessed against the Development Plan unless material considerations suggest otherwise. Therefore, development not in accordance with a Development Plan can still be acceptable.

7.31. The task for the decision maker, then, is to weigh the level of conformity with the Development Plan together with other material considerations.

7.32. The proposal is in conformity with the Development Plan. The proposal will also deliver the following significant benefits which are material considerations:

- It will provide a popular form of hot food and 'treat' meal at a reasonable price so would be accessible to a wide range of the local population;
- It will offer local people additional choice of hot food takeaway in the area;
- Temporary employment in several trades will be generated by the internal fit out works;
- Once the proposed use is in operation it will sustain approximately 20 full-time jobs;
- It will add to the vibrancy and vitality of the area by making use of an empty unit that has been vacant for nearly two years and enhancing footfall;
- It will enable an international company, which is a robust business bringing with it a long-term presence, to operate from the application site;

- Reinstating the property to an active frontage after a period of being vacant;
- It will enhance the Borough's reputation as a destination that encourages commercial investment by refurbishing a vacant property in a prominent location;
- It will ensure the property does not become derelict and start to create uncertainty in the street; and,
- Providing investment (between £150-200k) into the property may also increase the moral of other traders in the Local Centre which can only be a good thing for the locality.

7.33. The Framework's presumption in favour of sustainable development, the significant benefits associated with the application proposal and the conformity with the Development Plan far outweigh any perceived harm associated with the loss of an A1 unit, which is no longer a recognised Use Class.

7.34. In this case, the planning balance falls firmly in favour of approving the proposed development.

8. Conclusion

8.1. The proposed development comprises the change of use of 187 Kirkway, Middleton, from a shop (Use Class E) to a hot food takeaway (Sui Generis Use) with internal and external alterations.

8.2. The information provided with this application demonstrates that the proposed change of use complies fully with the Development Plan. It also demonstrates that there are no material considerations that indicate planning permission should be refused.

8.3. It is therefore respectfully suggested that full planning permission should be granted for the proposed development.

9. Appendices

Appendix 1 – Noise Management Plan

Appendix 2 – Bin Specification Details

Appendix 1 – Noise Management Plan

Noise Management Plan

Our systems for noise management provide for the following provisions:

- The doors to the premises are fitted on sprung hinges which incorporate a soft close mechanism. Consequently, the door doesn't slam when customers leave the premises.
- A3 sized posters with the company's logo are posted in plain view of customers with the words "This is a residential area. Please be considerate to our neighbours by leaving the premises quietly."
- Papa John's train their staff to courteously remind customers to leave the premises quietly and in an orderly manner.

In terms of noise generated from deliveries the following strategies are employed:

- All drivers are trained using a DVD that the Papa John's training team has developed, this advises of the need for compliance with road safety and noise management
- There are laminated screen surrounds positioned on driver despatch screens. These are a training tool and reiterate key points about customer service, road and vehicle safety and noise management
- Car horns are not be used inappropriately
- Drivers will not slam doors
- Drivers will not loiter or socialise outside the unit
- Delivery vehicles used will be road worthy, in good working order and their condition monitored on a daily basis as part of the manager's checklist
- Dates for vehicle servicing and MOT's are logged in the electronic point of sale systems installed in the units to ensure all delivery vehicles are maintained in good working order

Appendix 2 – Bin Specification Details

020 8776 8957
sales@britishbins.co.uk
www.britishbins.co.uk

1100 ltr Wheelie Bin Specification Sheet

Features



- Manufactured and tested to EN840 - DIN30700. (EN840 is the Europe wide standard for emptying interoperability and handling safety).
- Extra strength comb lift bar.
- Made from HDPE (High –density Polyethylene) for extra strength and life.
- Full thickness “flat body” design (Some other bins, with “fluted bodies” that are much thinner, won’t last as long).
- Maximum strength additives for resistance to UV, cold, heat and chemicals. (No corners cut).
- High strength Trunnions (Din Lifting Side Lugs) supplied as standard.
- Certified compliant with EU the noise protection Directive.
- 100% recyclable at end of life.

Specifications

- Weights:- Rated maximum load 450kg. Dead weight 58kg
- Dimensions:-

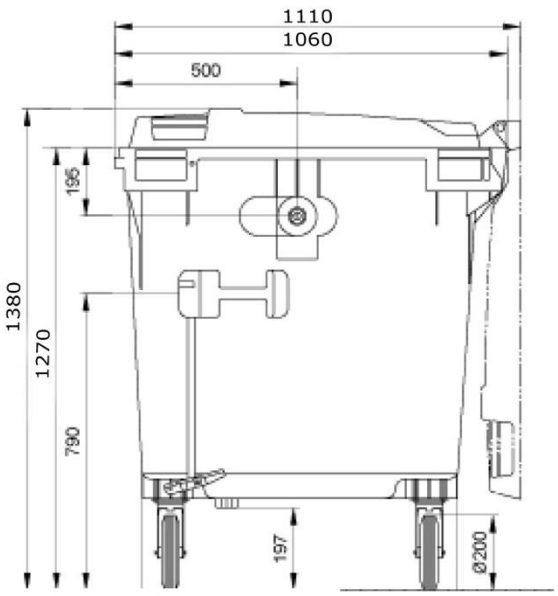

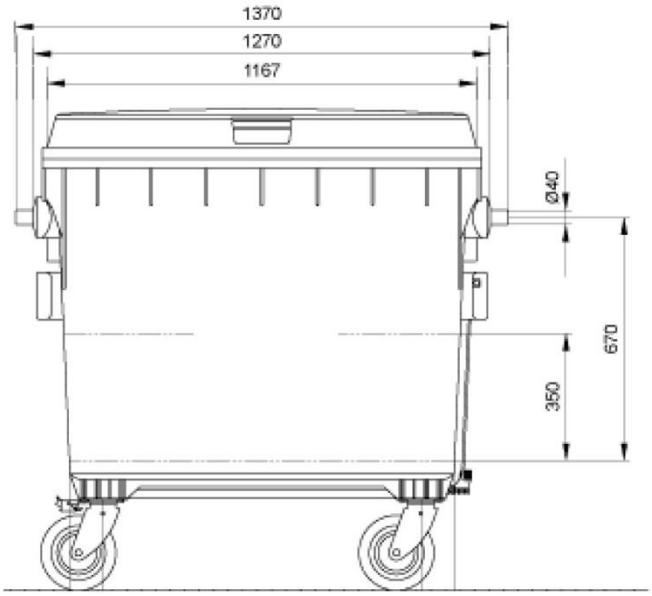

- **Standard Colours:-**
  Other colours are available for orders of 100+ units

Antracite Grey R7016
Reseda Green R6011
Traffic Red R3020
Sky Blue R5015
Zinc Yellow R1018

© BritishBins - London

sw.co.uk

FS 632568 EMS 632569 OHS 632570

Sanderson Weatherall LLP. Registered in England Company Number OC 344 770

Registered Office 6th Floor, Central Square, 29 Wellington Street, Leeds, LS1 4DL

VAT Number 945 6744 83 Registered by RICS