Kingfisher Lighting

Datasheet

Paralume

Paralume is a tough and durable wall pack available with emergency and photocell options, suited to general area and perimeter lighting.



Key Features

- Luminaire Lumens 1,500
- LED Lumens 2,200
- Power 21W
- Efficacy 72.4 luminaire lm/W
- 4000K, CRI >70
- Lifetime >50,000hr L80, TM-21
- Asymmetric optic 180°
- Emergency and photocell options
- Also available in compact fluorescent, CMH and SON
- Driver included



LED | IP65

Optics

Paralume	Asymmetrical 180°

Applications

- Perimeter lighting
- Area lighting
- Security
- Pathways & pedestrian areas
- Underground car parks
- Retail parks
- Civic areas

Specification Text

The luminaire shall be manufactured from UV stabilised polycarbonate. The optical system shall consist of a UV stabilised polycarbonate diffuser. Access to optic, lamp and control gear via removable fascia. Sealed to a minimum IP rating of IP65. The luminaire shall be insulated to Class 1 and be suitable for use with HID, LED and fluorescent light sources. Options available include photo-electric cell with emergency option available.

Dimensions

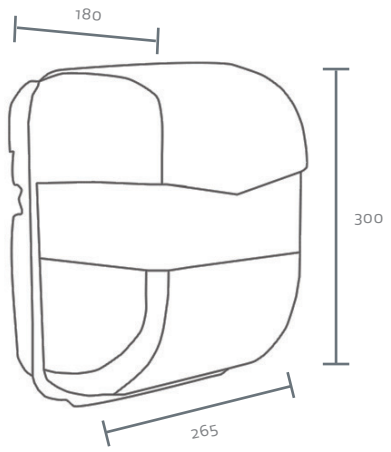

All units of measurement in mm.

Specifications

Weight	2.67-3.13 kg
Material	Die-cast aluminium
Paint Finish	Anthracite grey (RAL 7016)

Code	Power	Light Source	Luminaire Lumens	Optic	CCT(K)	IP	Weight (kg)	Paint Finish	Product Type
LED									
AP1020LEDKG	20W	LED	1500	Asymmetrical 180°	4000	IP65	2.67	Anthracite grey (RAL 7016)	Standard version
AP1020LEDKGEM	20W	LED	1500		4000	IP65	2.83	Anthracite grey (RAL 7016)	Emergency version
AP1020LEDKGPEC	20W	LED	1500		4000	IP65	2.97	Anthracite grey (RAL 7016)	With photocell
AP1020LEDKGEMPEC	20W	LED	1500		4000	IP65	3.13	Anthracite grey (RAL 7016)	Emergency version with photocell
Compact Fluorescent									
AP1032CFKG	32W	Compact Fluorescent	2400	Asymmetrical 180°	4000	IP65	2.67	Anthracite grey (RAL 7016)	Standard version
AP1032CFEMGKG	32W	Compact Fluorescent	2400		4000	IP65	2.83	Anthracite grey (RAL 7016)	Emergency version
AP1032CFKGPEC	32W	Compact Fluorescent	2400		4000	IP65	2.97	Anthracite grey (RAL 7016)	With photocell
AP1032CFEMGKGPEC	32W	Compact Fluorescent	2400		4000	IP65	3.13	Anthracite grey (RAL 7016)	Emergency version with photocell
AP1042CFKG	42W	Compact Fluorescent	3200		4000	IP65	2.67	Anthracite grey (RAL 7016)	Standard version
AP1042CFEMGKG	42W	Compact Fluorescent	3200		4000	IP65	2.83	Anthracite grey (RAL 7016)	Emergency version
AP1042CFKGPEC	42W	Compact Fluorescent	3200		4000	IP65	2.97	Anthracite grey (RAL 7016)	With photocell
AP1042CFEMGKGPEC	42W	Compact Fluorescent	3200		4000	IP65	3.13	Anthracite grey (RAL 7016)	Emergency version with photocell
Ceramic Metal Halide									
AP1070CHKG	70W	Ceramic Metal Halide	7000	Asymmetrical 180°	4000	IP65	2.67	Anthracite grey (RAL 7016)	Standard version
AP1070CHKGPEC	70W	Ceramic Metal Halide	7000		4000	IP65	2.97	Anthracite grey (RAL 7016)	With photocell

Code	Power	Light Source	Luminaire Lumens	Optic	CCT(K)	IP	Weight (kg)	Paint Finish	Product Type
High Pressure Sodium (SON)									
AP1070SKG	70W	SON	6500	Asymmetrical 180°	4000	IP65	2.67	Anthracite grey (RAL 7016)	Standard version
AP1070SKGPEC	70W	SON	6500		4000	IP65	2.97	Anthracite grey (RAL 7016)	With photocell

Codes with **EM** at the end relate to emergency version of fitting
Codes with **PEC** at the end relate to photocell option

Accessories / Options

Photocell option	See specification table
Emergency option	See specification table