18.288m (60') x 18.288m (60`) x 4.267m (14`) BUILDING ON 356mmx171mmx45kg UB STANCHIONS

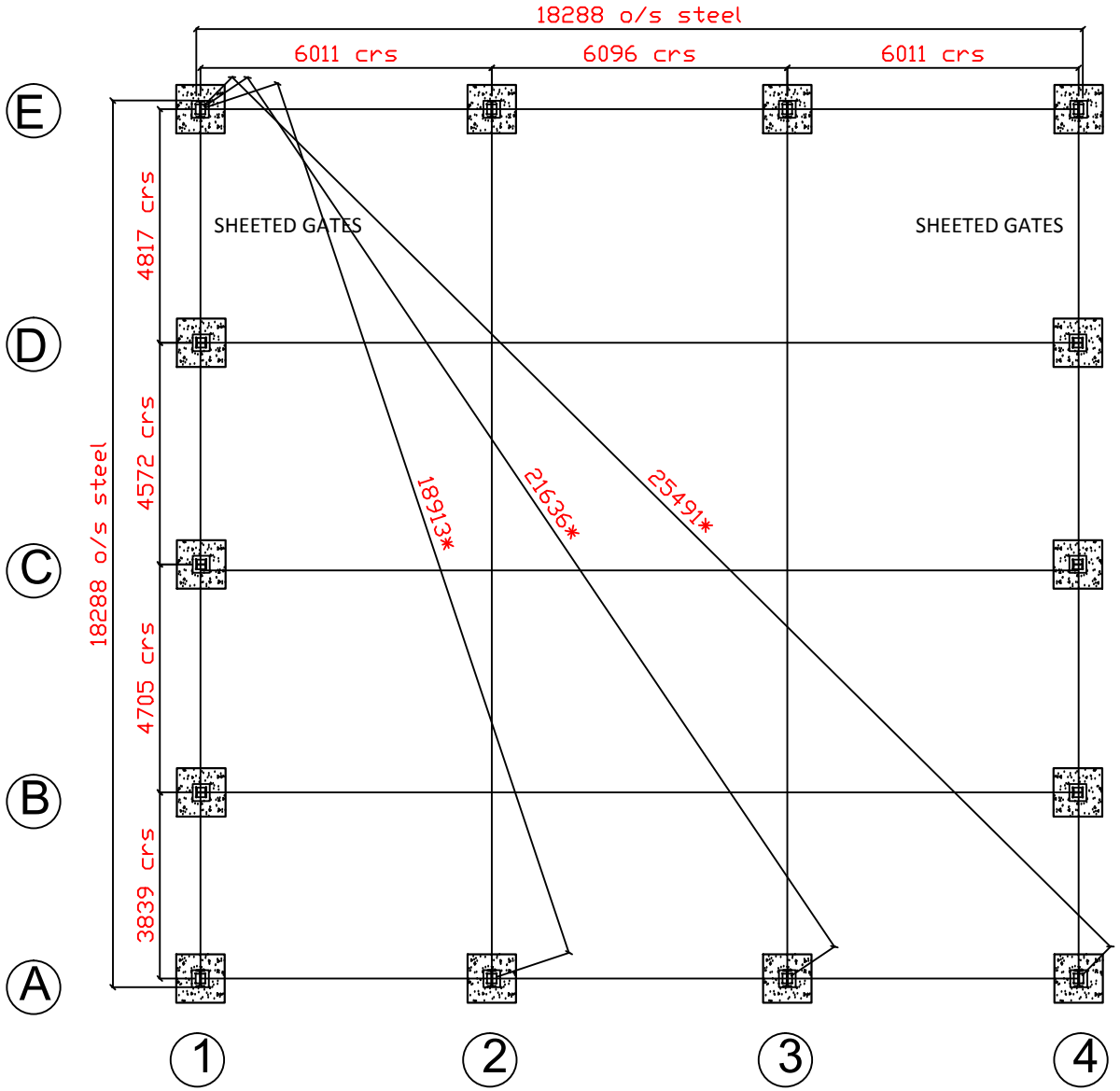

DIMENSIONS MARKED * ARE CHECK DIMENSIONS ONLY
PLEASE MAKE SURE GATE POSITION MEETS YOUR REQUIREMENTS

4 BOLT DETAIL

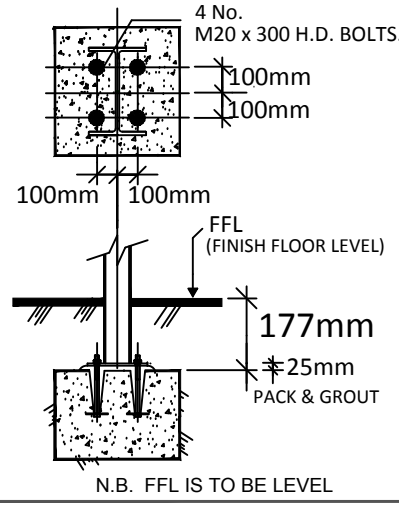

N.B. FFL IS TO BE LEVEL

NOTE.
ANY BUILDING WHICH IS ATTACHED TO AN EXISTING SHED. EAVES DETAIL & HEIGHT, BAY CENTRES AND STEEL SIZES MUST BE MEASURED, AS THIS INFORMATION IS REQUIRED FOR THE MANUFACTURE OF YOUR PROPOSED BUILDING.

CLIENT:
MR TAYLOR
CASTLEHILL FARM
CASTLEHILL ROAD
BURY
BL9 6UL

SITE ADDRESS:

CONTRACT:
MR TAYLOR
BURY

TITLE:
FOUNDATION PLAN

REVISIONS:

ROBINSONS
BROOMHOUSES 2 INDUSTRIAL EST
GLASGOW ROAD, LOCKERBIE
DG11 2SD
TELEPHONE: 01576 205905
FAX: 01576 204466
DRAWING OFFICE: 01606 330227

DRWN BY: JORDAN GRAHAM		DATE:	22/01/18
CHK'D BY:		DATE:	22/01/18
A3 SCALE:		A4 SCALE:	NTS
DRG. No.	RS18-1612-S5397-01	Rev.	