137 Belfield Lane,
Rochdale.

ARBORICULTURAL IMPACT ASSESSMENT
AND
METHOD STATEMENT

Rob Longley
Tree Consulting

63 Mizzy Road,
Cronkeyshaw,
Rochdale,
Lancashire.
OL12 6HL

Tel: 07971145529

Email: longleyclan@btinternet.com

Ref: RL/RP250419AIA&AMS

1.0 INTRODUCTION

1.1 This document has been prepared by Apex Tree Works on the behalf of Fututre Construction Ltd, in respect to 137 Belfield Lane. It provides an Arboricultural Impact Assessment (AIA) and Arboricultural Method Statement (AMS) for the proposed development at 'land at 137 Belfield lane.

1.2 Please Read all relevant documentation attached including, the site plan, proposed plan (The tree survey, and Tree protection plan (137 Belfield lane TPP). I confirm that all documents have been undertaken to British Standard 5837:2012 Trees in relation to design, demolition and construction– Recommendations.

1.3 In preparing this documentation, I have undertaken an arboricultural assessment of the trees and consulted with the Site manager to prepare the report. Drawings referenced:-

Architects drawings topographical survey
Proposed plans

2.0 ARBORICULTURAL IMPACT ASSESSMENT

2.1 The overall impact of the proposed development on trees is considered.

2.2 Summary of site – the site appears to be old scrub land adjacent to the existing street buildings. It would appear stripped and bare but also potentially a reasonable space for development. There are three outside the boundary of the site. These are deemed either protected with the erection of fencing blocking contruction access to the extremeities of the branches to provide direct damage protection. The other trees are either outside the scope of the condtruction works or are trees deemed a potential future hazard and thus can be deemed as undesirable. These are young self seeded specimens along the boundary. Trees in the woodland opposite the property are lifted high enough for standard site traffic and if larger vehicles are to be utilised then the trees should be considered and either an arborist or the tree officer should be consuted.

2.2 This Impact assessment considers the trees in relation to design, quantifying any proposed losses and their significance to the landscape character. All trees within the working area will be considered along with those which have potential to affect the future boundaries of the site, taking into consideration, future maintenance, light levels and suitability, both before the proposals and after. Any necessary losses will be quantified and suitable replacements identified to be both complementary and attractive for its uses, aesthetics and maintenance.

2.3 Loss of Trees

2.4 The site does not require the removal of any trees however it is deemed prudent to remove G1 due to boundary issues. These trees are self seeded and under shade of the main woodland. These would be slow growing and weak specimens

Tree Reference	Species	Retention Category	Notes
G1	Mixed		Retain and backfill or remove. Design of boundary should take account of root pressure

3.0 Tree Pruning Required

3.1 The recommended pruning comprises of the following:

Tree Reference	Species	Retention Category	Notes

There are no specific tree pruning required at present

4.0 Special working methodologies required

4.1 The recommended special working methodologies required comprises of the following:

Tree Reference	Species	Retention Category	Notes
T1, T2	Goat willow / Sycamore	C	Protective fencing needs to be erected at the positions shown on the diagram (TPP) with the distance

			from the centre of the tree as indicated in the tabulated survey for root protection radius) shown within yellow lines There should be hand dig methods used only within the root protection zone.

Fencing needs to be erected just inside the bare soil/ grass area nearest the trees to prevent contact damage to trees. Root protection will need to be monitored. A no dig method would be required to protect the roots whilst landscaping works are finished. See appendix D (2)

5.0 Shade and growth constraints from existing trees

5.1 It is not deemed that there will be any shade issues affecting the overall levels of light that design cannot cope with and the orientation should allow satisfactory level with periodic pruning of the nearby trees.

6.0 Impacts on off-site trees

6.1 off site trees have been considered in the whole report and comments noted to be passed on.

7.0 Conclusion

7.1 There are a large number of trees surrounding the site, which is possibly the reason for the report. The site is within close proximity to a woodland with a wildlife corridor for wildlife. Examining the site and the documents, I see no evidence of damage to trees or the woodlands adjacent. Materials should not be stored within the woodland or outside the site due to leaching of materials into root zones . fencing should be erected at the bottom of the plot as per the tree protection drawing (137 belfield lane TPP)

8.0 ARBORICULTURAL METHOD STATEMENT

8.1 The Arboricultural Method Statement (AMS) specifies the working methodologies which must be adhered to to provide ongoing health and vigour to the trees which are to be retain on site after the completion of the proposed construction

8.2 This AMS is in accordance with British Standard 5837: 2012 Trees in relation to design, demolition and construction– Recommendations.

8.3 The AMS must be considered a 'working document'. It must be made available to all operatives on site during construction to ensure that compliance with it is undertaken to prevent and damaging effects to the trees.

8.4 The method statement details the required construction practices to be followed to ensure the adequate protection of trees to be retained. It must be read in conjunction with the Tree Protection Plan (TPP 137 Belfield lane). The Method Statement provides general recommendations (sections 8.0 to 10.1) then details site specific issues which may need specialist methodologies to maintain protection (section 11.0 Phases 1 to 6).

8.5 Tree Works –General Issues

8.6 All tree/vegetation works are to take place prior to any site operations and immediately before the installation of protective fencing.

8.7 All works to the existing trees are to be carried out by a fully qualified and insured tree surgeon and in accordance with BS 3998 (2010) *Recommendations for Tree Work*.

8.8 The necessary tree surgery works, or removal of vegetation should be carried out **before** any construction work starts and immediately before erection of protective fencing. During construction, all trees should be deemed as protected by the planning constraints and any further works must be applied for to the local authority and confirmed in writing. Protective fencing is required for direct damage and thus should be placed as near to the existing tarmac as possible to allow works, any areas without existing tarmac shall have a load bearing surface imposed before allowing vehicles onto these area

8.9 Wildlife issues and timing of operations. The following must be observed:

Bats. Under current legislation it is an offence to 'intentionally or recklessly disturb a bat' or 'damage, destroy or block access to the resting place of any bat' (Countryside and Rights of Way Act 2001 and further strengthened by other legislation). Where work is being carried out and bats are present, or if the tree is a known roost, consultation must be made with the Statutory Nature Conservancy Organisation (Natural England www.naturalengland.org.uk). A European Protected Species Habitat Regulations Licence is likely to be required. Work to trees with the potential for roosting bats is best done from late August to early October. March through to April is also suitable although this may conflict with nesting birds (see below).

Birds. It is an offence to knowingly disturb any wild nesting birds Therefore any works should be timed to be outside the main nesting from late March to end August. Should nesting bird be found, the works in the area affected should be halted and delayed until the birds have flown the nest.

9.0 Method Statement – General Issues:

9.1 Protective fencing must be erected **prior to any site operations**. To give the best chance of continued good health of the retained trees, it will be essential to prevent root severance or compaction of the soil in the Root Protection Area. A stout fence shall be erected at the position shown on the Tree Protection Plan, comprising a braced scaffold frame with steel mesh panels securely attached (eg Heras). Mesh is preferred to boarding as it can be seen through and should be re-useable. A detail from BS5837 is attached (Appendix A). Once in place, the fence must be regarded as sacrosanct with no storage of materials/spoil or access by machinery within the protected area. The fencing shall be regularly inspected by the site agent and maintained in full condition.

9.2 Developers should enforce the methods of protection identified within the statement. All contractors must also agree to them. Any failure to comply with them must be dealt with by the developer. Any damage that may occur to trees due to failure to observe the method statement must be reported to the Local Planning Authority and arboricultural advice must be sought.

9.3 No pruning, lopping, felling or severance of roots is to take place without prior consent of the local authority or unless in compliance with specifications included within the Method Statement.

9.4 The ground levels within the protected fenced area must neither be raised nor reduced.

9.5 No ropes, cables, services, or notice boards shall be fixed to existing trees.

9.6 Fires should not be permitted, or else not lit where flames could extend to within 10m of the foliage, branches or trunk.

9.7 Should temporary access within the Root Protection Area be required that is not included within the method statement, an agreement, in advance, with the consultant and the LPA must be made. The fence may need to be re-aligned and the ground surface protected. For vehicular access this protection will need to be specifically detailed and agreed.

9.8 Care must be taken in regards to tall or wide loads, or use of plant with booms, jibs and counterweights. Where machinery may be required to operate in the vicinity of trees a banksman must ensure that no direct physical damage is caused is trees. It must be checked that any materials or vehicles entering the site are able to do so without causing damage to adjacent trees.

9.9 Any material that will contaminate soil (e.g. concrete mixings, and vehicle washings) must not be discharged within 10m of any tree stem. If diesel and fuel containers are used or stored on site they must be kept within a plastic container bund to prevent any ground contamination and spill kits must be kept available to remediate any spillage).

9.10 Where trenching may be required for the placing of underground services all works must adhere to Volume 4: NJUG Guidelines for the Planning, Installation and Maintenance of Utility Apparatus in Proximity to Trees (NJUG4). National Joint Utilities Group, 2007.

9.11 Arboricultural monitoring

(i) The arboricultural consultant (or local authority Tree Officer) shall be consulted whenever an unexpected issue occurs that involves any retained tree on site including access within the Protection Area.

(ii) No amendments shall be made to the methods detailed in this Arboricultural Method Statement without the agreement of the consultant or local planning authority Tree Officer.

(ii) If the site agent is at all unclear about exact compliance with any of the above requirements, or if requested by any other party, then a pre-start meeting shall be arranged with the architect, site agent, local authority tree officer and arboricultural consultant in attendance as necessary.

10.0 Health and Safety Issues

10.1 All operations must be carried out with full regard to Health and Safety requirements. Due to the diverse nature of recommendations included (e.g. tree surgery works, construction etc) it is necessary that supervisors of those undertaking recommended operations undertake risk assessments prior to starting the relevant works. It should be the Site Managers/developers responsibility to ensure that risk assessments are submitted prior to undertaking relevant works.

11.0 METHOD STATEMENT SCHEDULE

11.1 The following schedule details site specific requirements that must be followed. The Tree Protection Plan should be referenced in relation to the recommendations below. Where phase numbers are colour coded this relates to the relevant colour on the Tree Protection Plan.

Phase	Requirements (refer to TPP 4272.02)	Trees affected	Method
1 Prior to erection of protected fencing.	Trees to remove	**none**	Some trees are not owned by the site owner. The condition of these trees should be passed on so the owners can provide a duty of care. Fell trees according to BS 3998 (2010) removing all arising's from site.
	Trees to prune	None	Prune trees according to BS 3998 (2010 as specified on page 4-5 AIA section point 3.1).
2 Prior to any development works	Erection of tree protective fencing Fencing (above)	T1, T2	Protective fencing is to be erected in accordance with BS5837 (2012) shown in Appendix A of this document. The fencing must comply with the positions shown in the Tree Protection Plan. Where excavations into the RPA are necessary, the fence maybe relocated to the new RPA edge under supervision from the Arboriculturalist.
3 Prior to any development works	Implementation of Cellular confinement systems XXXXXXXXX	None	The installation of a cellular confinement system (CCS) will be required to provide vehicle and pedestrian access within areas that are subject to root incursion specified on page 5-6 AIA section point 4.1).Appendix A,B & C ar all applicable on this site and provides a product example of CCS, but actual product type should be implemented according to highway engineer's specifications.

4 Prior to any development works	Excavations Within RPA's XXXXXXXXX	None known	Excavations within RPA's should be should be completed using hand tools only under supervision from an Arboriculturalist in accordance with BS5837-Section 7.2.3 Avoiding physical damage to the roots during demolition or Construction (See Appendix B). Any roots encountered should be retained by being redirected back into the remaining RPA if possible.
5 Main Construction to proceed	Main construction works	Various	The main section of construction works may Proceed
6 After Construction is complete	Removal of protective fencing on completion of main development	Various	Dismantle protective fencing.

9.0 Site monitoring and supervision

9.1 This is to be undertaken by the appointed Arboriculturalist at set intervals to maintain the following actions are satisfactory and where relevant at the discretion of the LPA:

- Trees removed or pruned due to condition and development
- Erection of protective fence
- Hand digging areas within RPA's
- Implementation of Cellular Confinement System's (CCS)

Date	Comments	Developer	Arboriculturist

APPENDIX A – FULL PROTECTIVE FENCING SPECIFICATION BS5837 2012

BS 5837 (2012) Tree Protection Fencing

NOTES

1. STANDARD SCAFFOLD POLES.
2. HEAVY GAUGE 2 M TALL GALVANIZED TUBE AND WELDED MESH INFILL PANELS.
3. PANELS SECURED TO UPRIGHTS AND CROSS-MEMBERS WITH WIRE TIES.
4. GROUND LEVEL.
5. UPRIGHTS DRIVEN INTO THE GROUND UNTIL SECURE (MINIMUM DEPTH 0.6 M).
6. STANDARD SCAFFOLD CLAMPS.

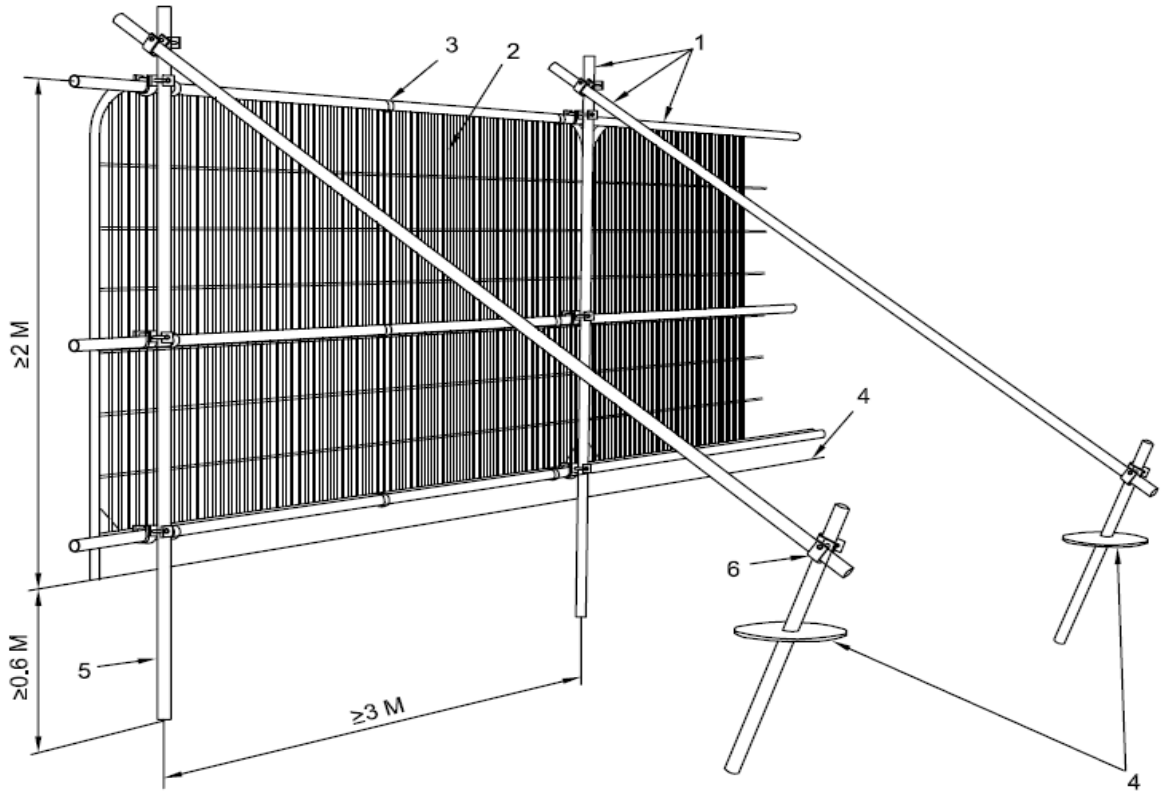

Note – Rubber feet are generally accepted by the LPA if driven into the ground using ground pins.

APPENDIX B – SECTION OF BS 5837 (2012) RECOMMENDATION FOR EXCAVATING WITH HAND TOOLS WITHIN RPA

7.2 Avoiding physical damage to the roots during demolition or construction

7.2.1 To avoid damage to tree roots, existing ground levels should be retained within the RPA. Intrusion into soil (other than for piling) within the RPA is generally not acceptable, and topsoil within it should be retained in situ. However, limited manual excavation within the RPA might be acceptable, subject to justification. Such excavation should be undertaken carefully, using hand-held tools and preferably by compressed air soil displacement.
NOTE Due to the demands that manual excavation places on a development project, and limitations arising from health and safety considerations, it is not realistic to plan for excavation using hand-held tools where there is a need for trench shoring or grading the sides of the excavation to a stable angle of repose.

7.2.2 Roots, whilst exposed, should immediately be wrapped or covered to prevent desiccation and to protect them from rapid temperature changes. Any wrapping should be removed prior to backfilling, which should take place as soon as possible.

7.2.3 Roots smaller than 25 mm diameter may be pruned back, making a clean cut with a suitable sharp tool (e.g. bypass secateurs or handsaw), except where they occur in clumps. Roots occurring in clumps or of 25 mm diameter and over should be severed only following consultation with an arboriculturist, as such roots might be essential to the tree's health and stability.

7.2.4 Prior to backfilling, retained roots should be surrounded with topsoil or uncompacted sharp sand (builders' sand should not be used because of its high salt content, which is toxic to tree roots), or other loose inert granular fill, before soil or other suitable material is replaced. This material should be free of contaminants and other foreign objects potentially injurious to tree.

APPENDIX C – PRODUCT EXAMPLE FOR CELLULAR CONFINEMENT SYSTEM. CHOSEN PRODUCT MUST BE TO ENGINEERS SPECIFICATIONS.

CellWeb TRP (Installation Checklist)

Installation of the CellWeb™ Cellular Confinement System within the Root Protection Area of Trees





The following installation checklist can be used on projects where CellWeb™ is being installed as a permanent hard surface, a sub-base, or as temporary root protection during construction works.

The installation procedure can be utilised by the Local Authority (LA) tree officer to ensure that CellWeb™, that is being used for tree root protection, will be effectively installed. Alternatively, it may be more appropriate to request that the installation is certified by arboricultural consultants who are experienced in the installation of CellWeb™ and who can offer installation certification as part of a package endorsed by Geosynthetics.

The completion of the CellWeb™ installation in accordance with this procedure will enable planning conditions to be successfully signed off on completion of the project.

Stage 1 Initial site meeting to assess tree protection requirements in line with the Arboricultural Method Statement (AMS) produced by the developer's arboricultural consultant.

- Check the ground conditions, including the presence of compaction or made ground.

  Is any remedial work required, such as the removal of old hard surfaces and rubble or soil decompaction?

- Compare the existing ground levels with the new levels proposed in the development.

  Do the new levels allow for the depth of hard surfaces installed with a CellWeb™ foundation without excavation?

  Will excavation be required to achieve the proposed levels or to enable site drainage or integration with other water management solutions?

- Assess the suitability of tree protection proposals, including the fencing and ground protection that will be used throughout the demolition and construction phases of development.

  Can CellWeb™ be used as ground protection throughout the development period and also form the foundation for final hard surfaces?

  Is a temporary CellWeb™ installation needed to enable site access for construction traffic over an area designated as requiring tree root protection?

- Consider how utility service installations can be integrated with the installation of CellWeb™.

  Can services be installed before the CellWeb™ is laid, or is it possible to use directional drilling later on in the development?

- Consider how other water management solutions for the site can be integrated with CellWeb™, including porous hard surfaces, drainage and underground storage.

  Has a combined and integrated water management plan been designed that considers retained trees?

  Do the water management solutions for the site consider the water requirements of retained trees?

  Do the storage solutions allow for the slow release of water into areas of the site accessible by tree roots, while also dealing with potential soil pollutants from surface water run-off?

- How are the developers going to ensure that the CellWeb™ is specified and installed effectively?

Geosynthetics
Fleming Road
Harrowbrook Industrial Estate
Hinckley, Leicstershire
LE10 3DU

T: 01455 617 139
F: 01455 617 140
E: sales@geosyn.co.uk

APPENDIX D – SPECIAL WORKING AREA

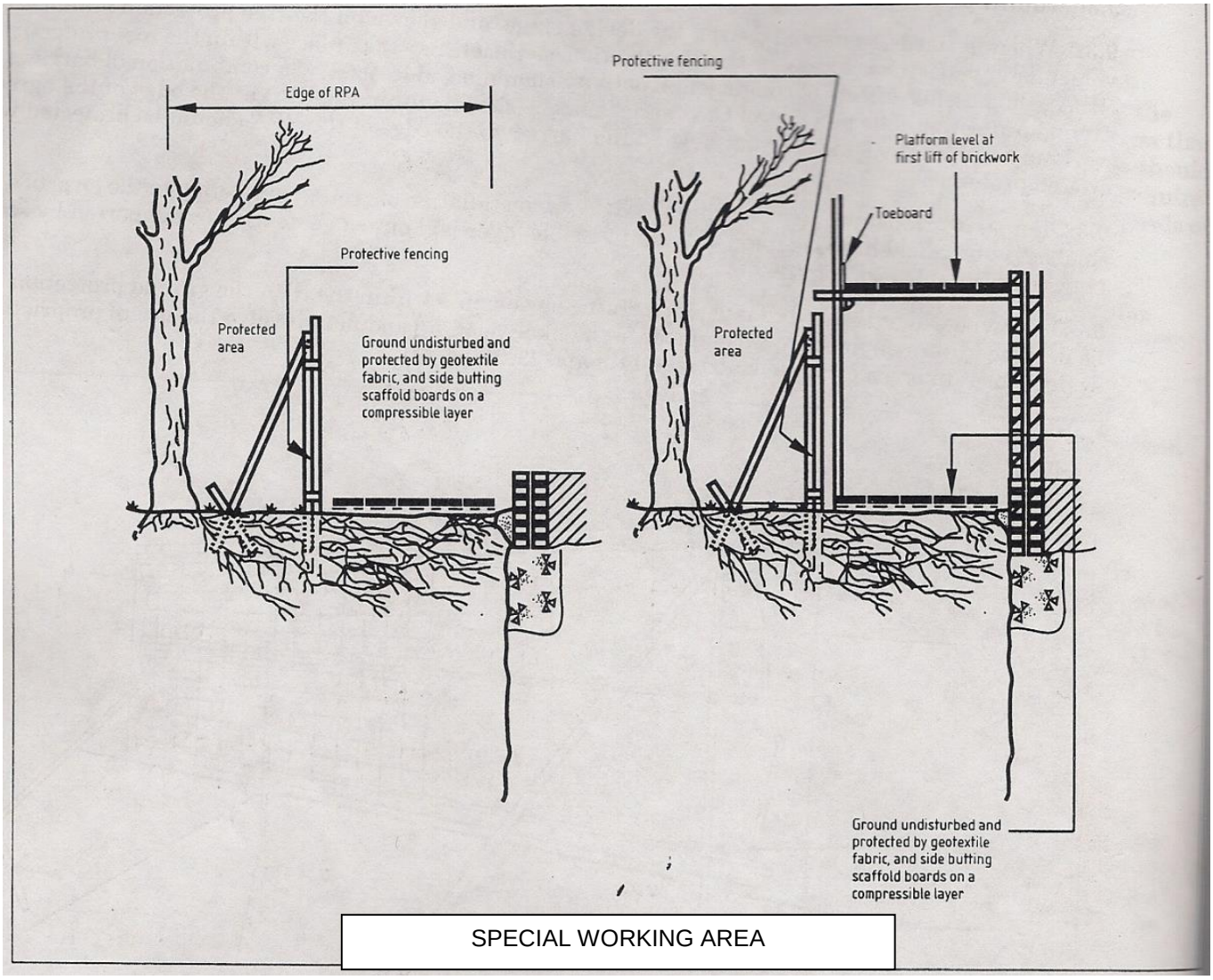

SPECIAL WORKING AREA

The special working area is within the Root Protection Area of the tree – it provides room for scaffolding and access for pedestrians only. The tree protection plan shows the position that the special working area is to be used.

ROAD CONSTRUCTION – 'NO DIG' METHOD

This allows for removal of turf only so avoiding any root damage via excavation. A purpose-made three-dimensional plastic cellular system is placed over the existing ground surface - this should increase load capacity by up to 50% allowing a shallower overall construction depth. Installation is summarised as follows (this should not be taken as definitive and will require the input of engineers at the design stage):

(i) Removal of turf only, provided no surface roots are present. This should only be carried out under supervision by the arboricultural consultant.

(ii) If judged acceptable by the consultant it may on occasions be acceptable to remove a few more centimetres of top soil - however this must not be done without the arboricultural consultant present.

(iii) This exposed surface must not be accessed by machinery.

(iv) Placement of a Geotextile separation fabric (Fibretex F4M recommended).

(v) Placement of cellular 3 dimensional grid, temporarily pinned into place. The building agent should familiarise himself with the system and choose the appropriate cell depth. However if the surface has to be able to withstand lorries, the maximum 200mm cell depth should be used, and for footpaths the minimum cell depth may be appropriate.

(vi) Filling of grid with angular roadstone, 40/20mm and clean with no fines (to retain air permeability). To be done working from one end with subsequent dumper movement over the freshly laid stone. (vii) Air and water-permeable top surface (gravel, open-jointed paviours, permeable bonded resin, permeable grade tarmac etc). For the last 2, proper information on the product permeability should be established. Depending on type, a separation fabric and/or layer of fine stone or coarse grit may be required, however this should remain a permeable no-fines grade and not hoggin for example.

(viii) As this results in a raised surface, containment of the edges is likely to be required. This should be done using treated wooden boards held in place by wooden pegs or metal pins. Kerbing or haunching should not be used as this would excavate into the root area.

(ix) It is essential that no service trenches or other excavations take place within this footprint.

The cellular system should be installed first before any site machinery or materials come onto this area of the site as the area must not be tracked over prior to installation.

References:
Suppliers of three-dimensional grid for no-dig construction method:
CellWeb, Geosynthetics Ltd. Tel: 01455 617139 sales@geosyn.co.uk www.geosyn.co.uk
Erocell by Terram Ltd. Tel: 01495 757 722 info@terram.co.uk www.terram.com