History.

Revision	Date	Reason
0	Jan 2021	Original.

History. 1
Background. 1
Site Investigations. 2
TJBA/DANBAR Drilling Ltd January 2021. 2
Stratigraphy. 2
Conclusions. 2
Cover Mitigation & Shallow Seams 2
Coal Shafts. 3
Gas Risk. 3
Foundations. 3
Appendix. 4
Site Investigation Plan 4
DANBAR Ltd Site Investigation Logs. 5
Coal Authority Permit. 7
Clay Bank Street Development – E3P Site Investigation Plan & Sections. 9
CIRIA C758, Fig 5.4. 10
BS 8004 Table 1 11

Background.

T. J. Booth Associates have been appointed by Mr Pete Spence to undertake a Site Investigation into coal mining legacy beneath the Development Site at Furness Avenue, Heywood.

The proposed development was subject to a planning application, ref No. 19/00645/FUL, for the "Erection of 5No. dwellings and demolition of existing building – part retrospective". The planning permission was granted in December 2019. Condition No. 4 on the approval was concerned with mining legacy and potential ground instability, and stated investigations were required as part of the planning process for development:

> 4 No further development or works of site preparation shall take place until a scheme of intrusive site investigations for the off-site mine entry and shallow coal workings has been submitted to and approved in writing by the Local Planning Authority.
>
> The submitted report of findings arising from the intrusive site investigations shall include a plan showing the location of the mine entry and its zone of influence and how this relates to the development and include a scheme of remedial works for approval by the Local Planning Authority.
>
> The development shall thereafter be carried out in full accordance with the duly approved scheme and a verification report submitted to and approved in writing by the Local Planning Authority before the dwellings hereby approved is first occupied.

A Coal Mining Risk Assessment was undertaken for the Site by REFA Consulting Engineers in May 2019. The report indicated that 2No. boreholes should be undertaken to assess potentially worked seams beneath the Site.

The REFA report also noted a coal seam approximately 19m off the site property, but due to the proposed building footprints being over 20m distant from the shaft, risks were considered mitigated.

Subsequently TJ Booth Associates were employed to undertake site investigations and reporting to assess the on-site geology, and address the planning condition.

Prior to the investigations, a Coal Authority Permit to drill was obtained for the site investigations, refer to Appendix.

Site Investigations.

TJBA/DANBAR Drilling Ltd January 2021.

Site investigations were undertaken specifically to investigate coal mining legacy beneath the Site for development purposes.

Site investigations comprised 2 No. boreholes (BHs 1-2) undertaken between the 19th – 20th January 2021 by Danbar Drilling Ltd.

The boreholes were undertaken with a rotary rig by water flush method in accordance with Coal Authority guidelines.

On completion of the holes, each was filled with a bentonite seal to bedrock level, and then with BH arisings to ground level.

Stratigraphy.

The BGS maps show the strike of the local geology to be on approximatley the same bearing as the east site boundary, with the dip nominally west-southwest towards the site. Thus, the Arley seam subcropping to the west of the site would be encountered at its shallowest depth at the east site boundary and at the lowest point of the site.

In any case that current geological maps are wrong and the seam subcrops for instrance within the site boundary, then the best position for a second borehole would be to the west site boundary.

With the above in mind, BH1 was sunk to the east boundary, and BH2 to the west, at the lowest points possible on site considering access.

The boreholes recorded glaciofluvial CLAY to 8m depth over grey mudstone with occassional sandstone layers (Coal Measures) to 30m depth.

No coal seams or voids were noted in either borehole.

On completion, both boreholes were sealed with bentonite to rockhead, then with arisings to ground level.

Conclusions.

An E3P Plan for neighbouring development approximately 100m west/south west was undertaken c 2017, refer to plan and sections in the Appendix.

The site investigations and subsequent report plan and sections show that the local coal seam subcropping positions as shown on the BGS & CA maps are skewed west/south west by up to approximtely 100m, ie the position of the thin seam to the west of the the Application Site should subcrop closer to the west boundary, nominally in the position of the offsite shaft approximately 18m west of the Site boundary.

This would also suggest that the Arley seam subcrops much further to the west, and hence why it has not been located beneath the Application Site at shallow depth as it would have been if the position of the seam was as located on the BGS maps.

Cover Mitigation & Shallow Seams

No coal seams were recorded in either BH on site investigations and thus there is no risk to the proposed development.

No further assessment needs to be undertaken in this regard.

Coal Shafts.

The coal shaft to the west of the site is measured at 18m for the development buildings foundation/wall lines. Given the 8m of clay cover noted in the site investigations, any shaft collapse would have a zone of influence of 8m distance from the shaft position.

As the site buildings are over this distance and outside of the zone of influence, the risk from shaft collapse is considered to be mitigated even when considering potential shaft departure distances.

Gas Risk.

Unworked seams pose a minimal risk, and although no coal seams were noted in the investigations, in accordance with good practice, each borehole was sealed to bedrock with a bentonite cap mitigating any potential pathway for gas migration.

No further assessment needs to be undertaken in this regard.

Foundations.

No voids or workings were noted beneath the site, and subsequently the ground & foundations are not affected by coal mining legacy.

Appendix.

Site Investigation Plan

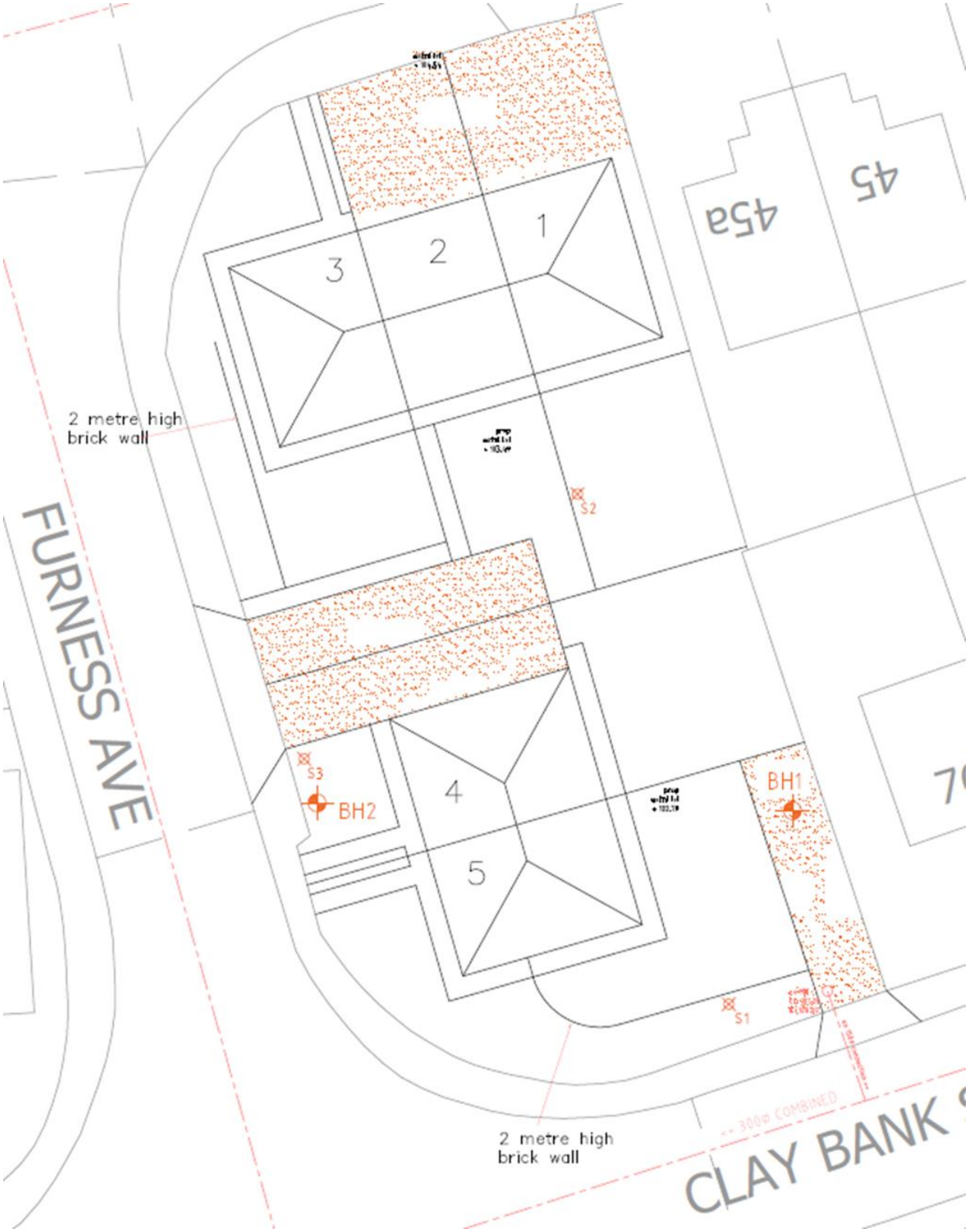

T J Booth Associates.
Consulting Engineers
20A Eastgate St,
Rochdale
OL16 1DH

Project	Job Ref.
Holmtree Developments / Furness Avenue, Heywood	rep-tjba-holmtree-furness ave-coal seam SI report-070121
Section: Coal Seam Site Investigation Report	Sheet no./rev.: 5
Calc. by: DS	Date: 07/01/2021
Chk'd by	Date
App'd by	Date

DANBAR Ltd Site Investigation Logs.

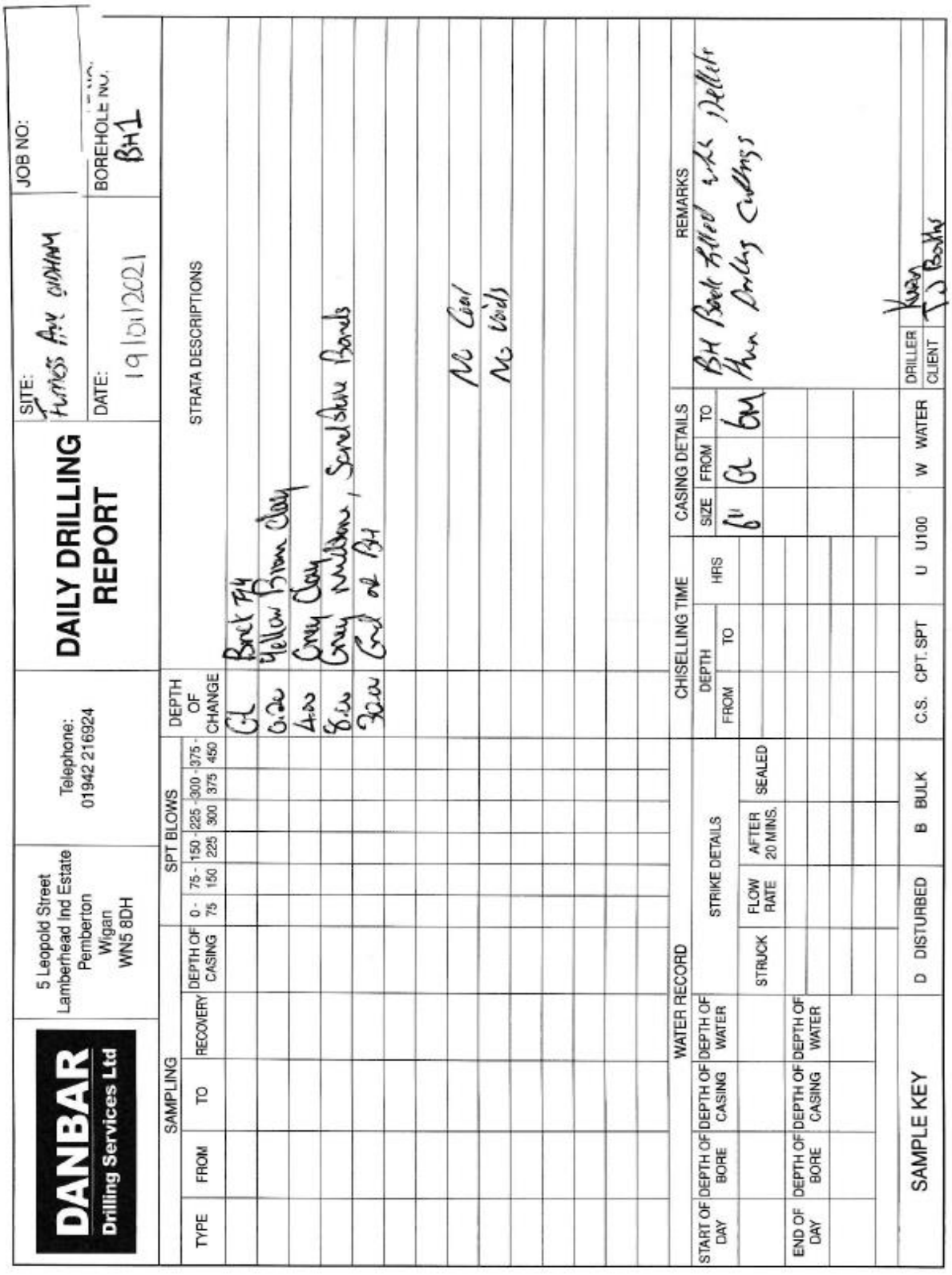

DANBAR Drilling Services Ltd

5 Leopold Street
Lamberhead Ind Estate
Pemberton
Wigan
WN5 8DH

Telephone: 01942 216924

DAILY DRILLING REPORT

SITE: Furness Ave OLDHAM

JOB NO:

DATE: 19/01/2021

BOREHOLE NO.: BH1

SAMPLING TYPE	FROM	TO	RECOVERY	DEPTH OF CASING	SPT BLOWS 0-75	75-150	150-225	225-300	300-375	375-450	DEPTH OF CHANGE	STRATA DESCRIPTIONS
											GL	Brick Fly
											0.20	Yellow Brown Clay
											4.00	Grey Clay
											8.00	Grey Mudstone, Sandstone Bands
											30.00	End of BH
												No Coal
												No Voids

WATER RECORD

START OF DAY	DEPTH OF BORE	DEPTH OF CASING	DEPTH OF WATER	STRIKE DETAILS: STRUCK	FLOW RATE	AFTER 20 MINS.	SEALED
END OF DAY	DEPTH OF BORE	DEPTH OF CASING	DEPTH OF WATER				

CHISELLING TIME

DEPTH FROM	DEPTH TO	HRS

CASING DETAILS

SIZE	FROM	TO
6"	GL	6M

REMARKS

BH Back filled with Pellets then Drilling Cuttings

SAMPLE KEY: D DISTURBED | B BULK | C.S. CPT. SPT | U U100 | W WATER

DRILLER: Kwan
CLIENT: T J Booths

DANBAR
Drilling Services Ltd

5 Leopold Street
Lamberhead Ind Estate
Pemberton
Wigan
WN5 8DH

Telephone:
01942 216924

DAILY DRILLING REPORT

SITE: Furness Ave Oldham

JOB NO:

DATE: 20/01/2021

BOREHOLE NO: BH2

SAMPLING					SPT BLOWS						DEPTH OF CHANGE	STRATA DESCRIPTIONS
TYPE	FROM	TO	RECOVERY	DEPTH OF CASING	0 - 75	75 - 150	150 - 225	225 - 300	300 - 375	375 - 450		
											GL	Brick Fill
											0.20	Yellow Brown Clay
											4.50	Grey Clay
											8.00	Grey Mudstone, Sandstone Bands
											30.00	End of BH
												No Coal
												No Voids

WATER RECORD								CHISELLING TIME			CASING DETAILS			REMARKS
START OF DAY	DEPTH OF BORE	DEPTH OF CASING	DEPTH OF WATER	STRIKE DETAILS				DEPTH		HRS	SIZE	FROM	TO	BH Back filled with Pellets then Drilling Cuttings
				STRUCK	FLOW RATE	AFTER 20 MINS.	SEALED	FROM	TO		6"	GL	GM	
END OF DAY	DEPTH OF BORE	DEPTH OF CASING	DEPTH OF WATER											

SAMPLE KEY: D DISTURBED | B BULK | C.S. CPT. SPT | U U100 | W WATER

DRILLER: Kieran
CLIENT: TJ Booths

T J Booth Associates.
Consulting Engineers
20A Eastgate St,
Rochdale
OL16 1DH

Project: Holmtree Developments / Furness Avenue, Heywood

Section: Coal Seam Site Investigation Report

Job Ref.: rep-tjba-holmtree-furness ave-coal seam SI report-070121

Sheet no./rev.: 6

Calc. by: DS | Date: 07/01/2021 | Chk'd by: | Date: | App'd by: | Date:

Coal Authority Permit.

The Coal Authority

Permit to Enter or Disturb Coal Authority Interests

Permit 21361

Name and Address of Permit Holder:

Holmtree Developments, ROCHDALE
Woodhouse Fold Farm
Woodhouse Lane
Norden
Rochdale
OL12 7TB

Site Location:

Site off Furness Avenue
Heywood
Rochdale
OL10 4UP

This certificate hereby grants the above named Permit Holder a Permit to carry out:-

Ground investigation by two boreholes to 30m to determine the presence of shallow mine workings. within the Authority's interests at the identified site location above as shown on the Grant Permit Boundary (overleaf) for the period of 12 months from the granted date shown below. *The granting of this Permit does not constitute advice given by the Authority in relation to the proposed operations. It is the Permit Holder's responsibility to obtain appropriate health, safety, environmental, technical and legal advice.*

Conditions:

- *Water flush*
- *Gas Monitoring CO, CH_4, CO_2, O_2, H_2S at borehole and rig*
- *Operators undertaking the work must be in possession of this certificate and the Permit boundary plan at the time of works*
- *Appropriate borehole sealing without delay and to withstand site level changes*

Signed: Jake Morris Granted Date: 15/01/2021

For and on behalf of The Coal Authority

Nominated Representative: Jake Morris, Permitting Manager;
The Coal Authority, Permitting Office, 200 Lichfield Lane, Mansfield, Notts, NG18 4RG
Tel: 01623 637450; E-Mail: permissions@coal.gov.uk

The Coal Authority

Granted Permit Boundary

Permit Ref: 21361

Permit Boundary:



These maps are reproduced from Ordnance Survey material with the permission of Ordnance Survey on behalf of the controller of Her Majesty's Stationary Office. © Crown Copyright. Unauthorised reproduction infringes Crown copyright and may lead to prosecution or civil proceedings. The Coal Authority. Licence No: 100020315. [216]

T J Booth Associates. Consulting Engineers 20A Eastgate St, Rochdale OL16 1DH	Project: Holmtree Developments / Furness Avenue, Heywood				Job Ref.: rep-tjba-holmtree-furness ave-coal seam SI report-070121	
	Section: Coal Seam Site Investigation Report				Sheet no./rev.: 9	
	Calc. by: DS	Date: 07/01/2021	Chk'd by	Date	App'd by	Date

Clay Bank Street Development – E3P Site Investigation Plan & Sections.

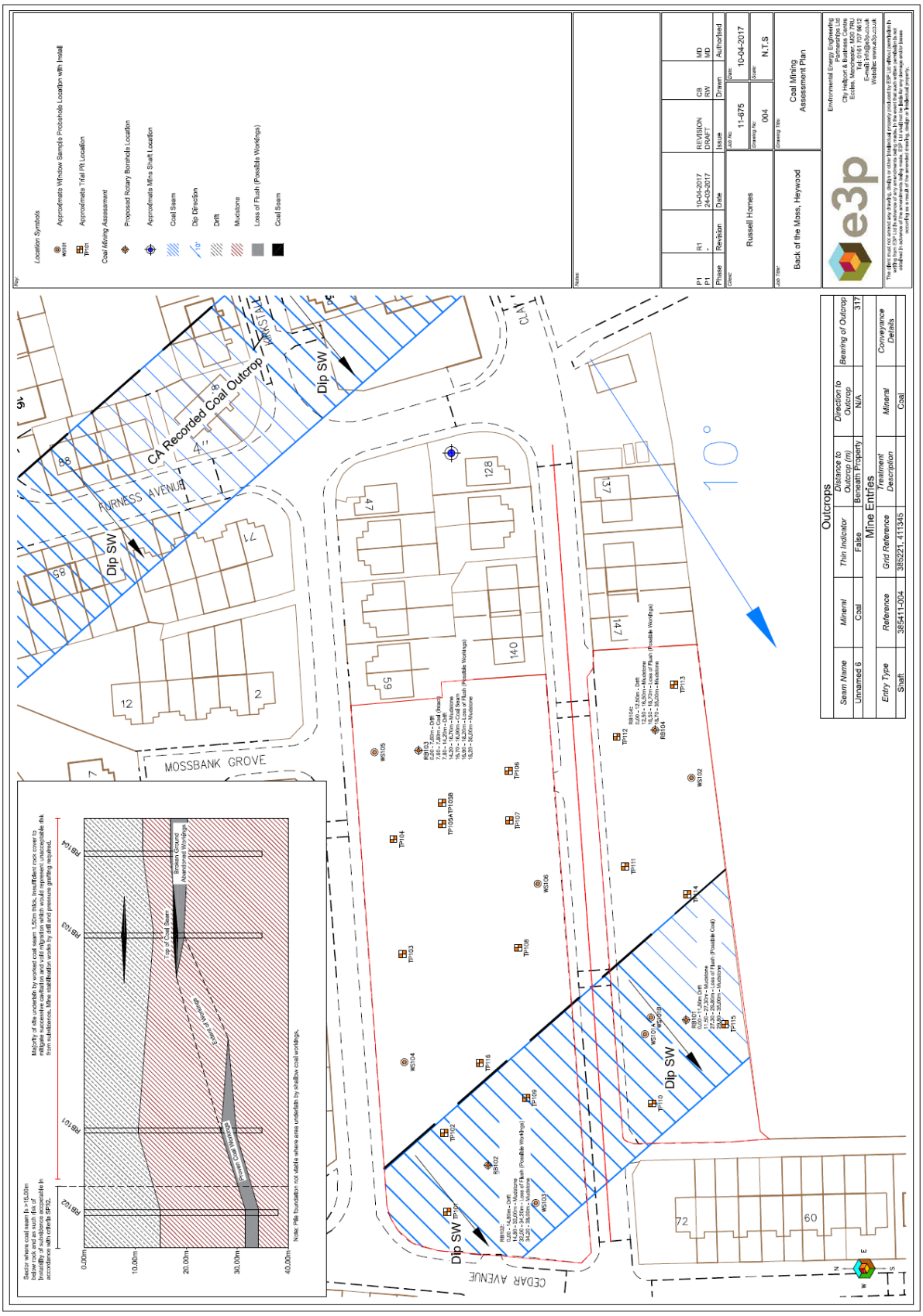

CIRIA C758, Fig 5.4.

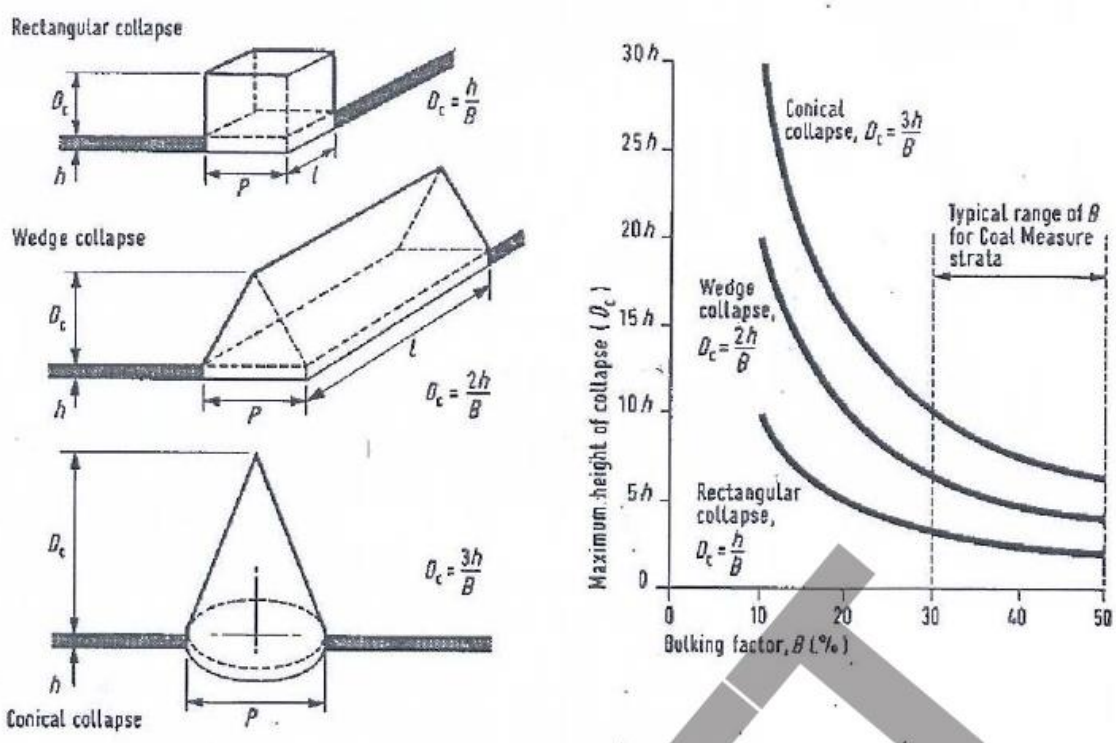

(a) Diagram showing notation relating to maximum height of collapse and geometry

(b) Postulated variation in maximum height of collapse for different modes of failure and bulking factors

Figure 5.4 Type and estimation of amount of void migration

BS 8004 Table 1

NOTE These values are for preliminary design purposes only, and may need alteration upwards or downwards. No addition has been made for the depth of embedment of the foundation (see **2.1.2.3.2** and **2.1.2.3.3**).

Category	Types of rocks and soils	Presumed allowable bearing value		Remarks
		kN/m^2 [a]	kgf/cm^2 [a] $tonf/ft^2$	
Rocks	Strong igneous and gneissic rocks in sound condition	10 000	100	These values are based on the assumption that the foundations are taken down to unweathered rock. For weak, weathered and broken rock, see **2.2.2.3.1.12**
	Strong limestones and strong sandstones	4 000	40	
	Schists and slates	3 000	30	
	Strong shales, strong mudstones and strong siltstones	2 000	20	
Non-cohesive soils	Dense gravel, or dense sand and gravel	> 600	> 6	Width of foundation not less than 1 m. Groundwater level assumed to be a depth not less than below the base of the foundation. For effect of relative density and groundwater level, see **2.2.2.3.2**
	Medium dense gravel, or medium dense sand and gravel	< 200 to 600	< 2 to 6	
	Loose gravel, or loose sand and gravel	< 200	< 2	
	Compact sand	> 300	> 3	
	Medium dense sand	100 to 300	1 to 3	
	Loose sand	< 100	< 1	
		Value depending on degree of looseness		
Cohesive soils	Very stiff boulder clays and hard clays	300 to 600	3 to 6	Group 3 is susceptible to long-term consolidation settlement (see **2.1.2.3.3**). For consistencies of clays, see Table 5
	Stiff clays	150 to 300	1.5 to 3	
	Firm clays	75 to 150	0.75 to 1.5	
	Soft clays and silts	<75	<0.75	
	Very soft clays and silts	Not applicable		
Peat and organic soils		Not applicable		See **2.2.2.3.4**
Made ground or fill		Not applicable		See **2.2.2.3.5**

[a] 107.25 kN/m^2 = 1.094 kgf/cm^2 = 1 $tonf/ft^2$.