Represented by:
ELTA GROUP BUILDING SERVICES LTD
email: info@egbuildingservices.co.uk
Tel: +44 (0)1384 275800 Fax: +44 (0)1384 275810
46 Third Avenue, Pensnett Trading Estate
Kingswinford, West Midlands DY6 7US

Version 5.18.6 Copyright © 2010-17 Elta Group

A BRAND OF eg BUILDING SERVICES

Technical Data - Fan Model SLC560/4B-1AC

Location: KEF1

Designation:

Performance - Required

Air Flow :	2.48 m³/s
Static Pressure :	200 Pa
Selection Pressure:	200 Pa
Installation Type:	n/a
Air Density:	1.204 kg/m³
- Atmos. Temp:	20 °C
- Altitude: m	0 m
- Humidity:	0.0 %

Actual

Air Flow:	2.48 m³/s
Static Pressure:	200 Pa
Total Pressure:	262 Pa

Fan Data

Catalogue Code:	SLC560/4B-1AC
Description:	Axial Duct
Diameter:	560 mm
Impeller Type:	Axial
Blade Material:	-
Speed:	1460 RPM @50 Hz
Power, Abs:	1.00
Efficiency Total:	65.1%
SFP:	0.50
Fan Weight:	50.0 kg

Peak:	1.00
Static:	49.9%

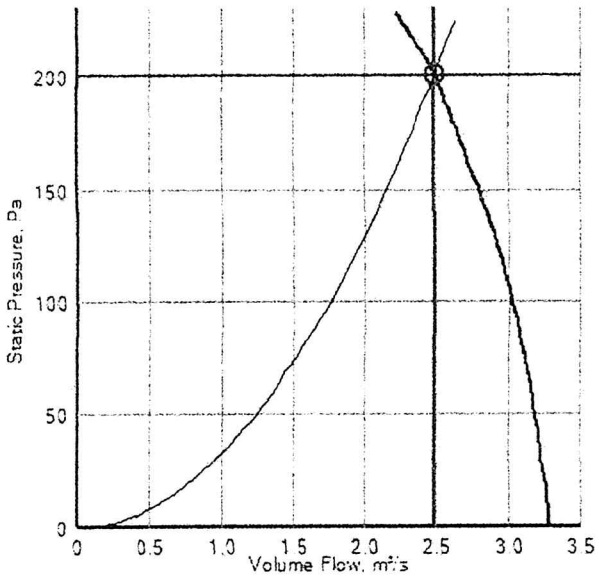

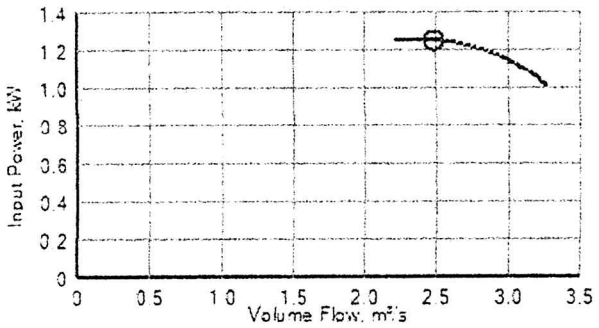

Motor Data (at STP)

Motor Type:	
Electrical Supply:	230V 1ph 50Hz
Motor Frame:	90
Motor Power:	1.10kW
FLC/Start (DOL):	6.38A / 37.00A
Motor Speed:	4 pole
Motor Efficiency:	79.3%

Sound Data

Spectrum (Hz):	63	125	250	500	1K	2K	4K	8K	dBW	dB(A) @ 3m
Inlet (dB):	77	74	80	75	75	74	72	66	85	60
Outlet (dB):	79	73	78	75	75	74	72	67	84	60

Sound levels are quoted as in-duct values. dB(A) values are average spherical free-field for comparative use only.

As part of our continuous improvement processes, Elta reserves the right to make changes in design or specification to products without notice.

Represented by:
ELTA GROUP BUILDING SERVICES LTD
email: info@egbuildingservices.co.uk
Tel: +44 (0)1384 275800 Fax: +44 (0)1384 275810
46 Third Avenue, Pensnett Trading Estate
Kingswinford, West Midlands DY6 7US

Version 5.18.6 Copyright © 2010-17 Elta Group

eg BUILDING SERVICES

Quotation 50K-0318-260

Fans

Project: Kitchen Extract Fan Unit

Consulting Engineer:

Location	Designation	Catalogue No.	Description	Qty.	Vol. (m^3/s)	Press (Pa)	Speed (r/min)	Motor Power	Motor Type	Electrical Supply	Inlet Sound Spectra(dBW) 63	125	250	500	1K	2K	4K	8K	SPL (dBA)
KEF1		SLC560/4B-1AC	Axial Duct	1	2.48	200	1460	1.10kW		230V 1ph 50Hz	77	74	80	75	75	74	72	66	60@ 3m

Represented by:
ELTA GROUP BUILDING SERVICES LTD
email: info@egbuildingservices.co.uk
Tel: +44 (0)1384 275800 Fax: +44 (0)1384 275810
46 Third Avenue, Pensnett Trading Estate
Kingswinford, West Midlands DY6 7US

Version 5.18.6 Copyright © 2010-17 Elta Group

A BRAND OF eg BUILDING SERVICES

Technical Data - Fan Model SLC560/4B-1AC

Location: KEF1 **Designation:**

Energy Related Product Data

Overall Efficiency:	40.3%
Measurement Category:	C
Efficiency Category:	Static
FMEG:	46
Specific Ratio:	1

At Maximum Efficiency Point

Input Power:	1.26 kW
Air Flow:	2.33 m³/s
Pressure:	217 Pa
Speed:	1460 r/min

Drawing for Fan model SLC560/4B-1AC

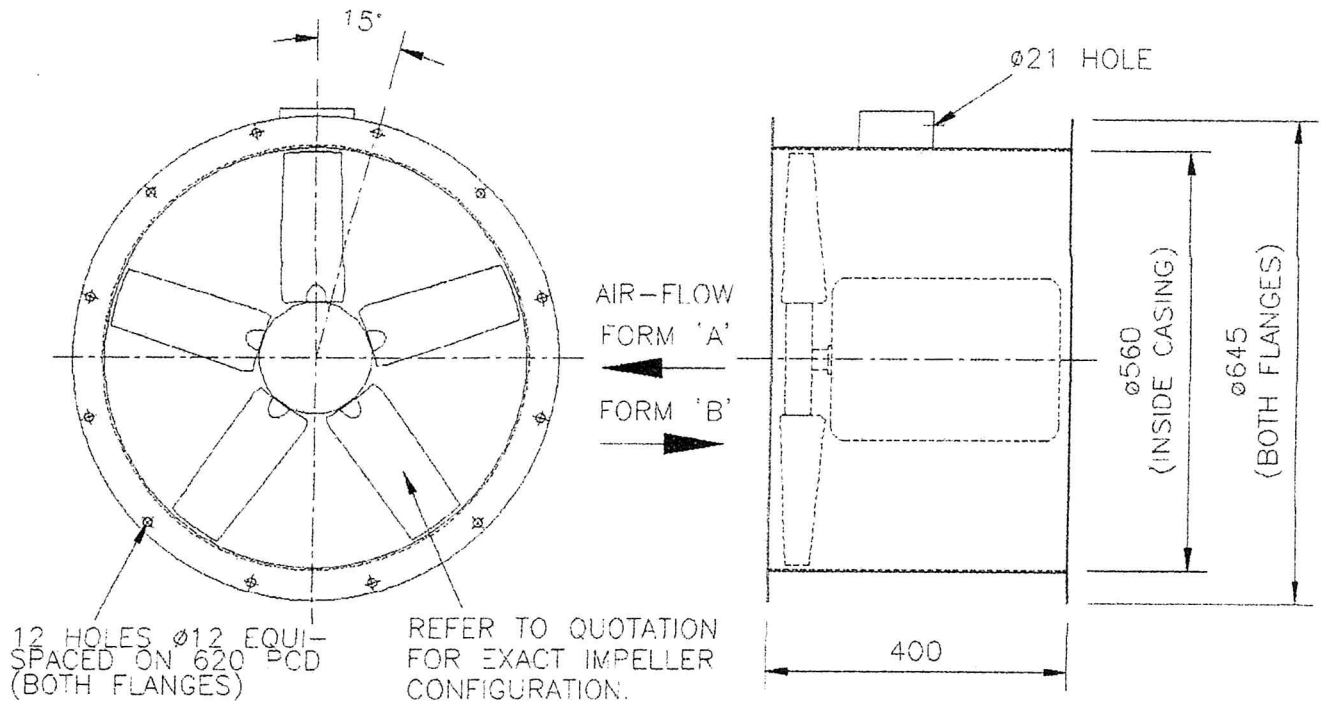

As part of our continuous improvement processes, Elta reserves the right to make changes in design or specification to products without notice.