aroTHERM air-to-water heat pump technical data

Article No.	aroTHERM heat pump
0020257346	aroTHERM 5kW heat pump
0020257347	aroTHERM 8kW heat pump
0020257348	aroTHERM 11kW heat pump
0020257349	aroTHERM 15kW heat pump
0020165288	aroTHERM 750mm flexi hose
Article No.	**aroTHERM hybrid heat pump**
0020257354	aroTHERM 5kW hybrid heat pump (for incumbent boiler)
0020257355	aroTHERM 8kW hybrid heat pump (for incumbent boiler)
0020257356	aroTHERM 11kW hybrid heat pump (for incumbent boiler)
0020257357	aroTHERM 15kW hybrid heat pump (for incumbent boiler)
0020257350	aroTHERM 5kW hybrid heat pump (for Vaillant boiler)
0020257351	aroTHERM 8kW hybrid heat pump (for Vaillant boiler)
0020257352	aroTHERM 11kW hybrid heat pump (for Vaillant boiler)
0020257353	aroTHERM 15kW hybrid heat pump (for Vaillant boiler)
Article No.	**Accessories**
0020175140	aroTHERM 600mm anti-vibration feet
0020145563	aroTHERM glycol discharge vessel
0020222287	aroTHERM 40 litre decoupler module
0020222285	aroTHERM inline 6kW back-up heater
0020222286	aroTHERM heat exchanger module
Article No.	**Compatible controls**
0020236291	Wired VRC 700 control unit
0020184844	VR 70 wiring centre
0020184847	VR 71 wiring centre
0020171334	VR 91 programmable room thermostat
0020017744	VR 40 multifunctional module 2-in-7
0020236293	VRC 700, VR 70 and VR 91 to control two radiator zones and DHW
0020236294	VRC 700, VR 71 and 2 x VR 91 to control three radiator zones and DHW
0020236295	VRC 700 and VR 70, to control one radiator zone and solar DHW

Dimensions:

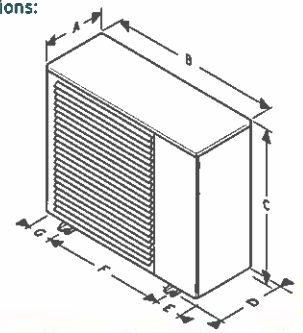

Dimension (mm)	5kW	8kW	11kW	15kW
A	408	463	463	463
B	980	1103	1103	1103
C	840	975	975	1380
D	386	437	437	437
E	120	162	162	162
F	740	778	778	778
G	120	162	162	162

aroTHERM output and SCoP table		35°C flow		40°C flow		45°C flow		50°C flow	
		output	SCoP	output	SCoP	output	SCoP	output	SCoP
5kW	-5°C	5.26	4.06	5.33	3.66	5.39	3.25	4.94	3.14
	-3°C	5.66		5.97		6.28		5.68	
	0°C	6.12		6.40		6.68		6.11	
	2°C	6.43		6.71		6.98		6.41	
8kW	-5°C	7.15	4.58	6.46	4.22	5.76	3.86	5.27	3.40
	-3°C	7.70		6.76		5.81		5.27	
	0°C	7.81		7.20		6.58		5.98	
	2°C	8.27		7.74		7.20		6.47	
11kW	-5°C	8.23	3.46	7.70	3.07	7.17	2.68	5.65	2.60
	-3°C	8.42		7.86		7.30		6.00	
	0°C	9.25		8.57		7.88		6.70	
	2°C	9.81		9.02		8.28		7.00	
15kW	-5°C	12.65	3.89	12.07	3.34	11.00	2.79	10.25	2.72
	-3°C	12.90		12.20		11.50		10.65	
	0°C	13.20		12.85		12.40		11.78	
	2°C	14.00		13.55		13.10		12.45	

Clearances:

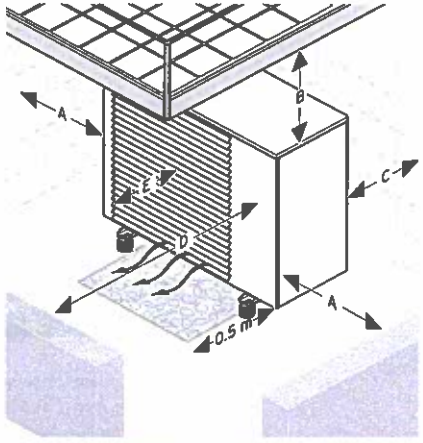

Clearance	For heating mode (mm)
A	> 250
B	> 1000
C	> 120
D	> 600
E	> 300

aroTHERM		5kW	8kW	11kW	15kW
Heat pump type		Monoblock air/water heat pump			
Flow/return heating connections, heat pump		1¼"			
Product dimensions, width	mm	970	1,103	1,103	1,103
Product dimensions, height	mm	834	975	975	1,375
Product dimensions, depth	mm	408	463	463	463
Net weight	kg	86	102	126	165
Hydraulic lines material		Copper			
Hydraulic connections material		Brass			
Hydraulic seals material		EPDM			
Plate heat exchanger material		AISI 304 stainless steel			
Pump casing material		Painted cast iron			
Pollution rating		2			
Supply voltage/ frequency	V/Hz	230/50			
Fuse type		T4A			
Inverter controller fuse	A/V	HRC 20/550			
Level of protection		IP 25			
Maximum start-up current	A	16	16	20	25
Maximum current consumption	A	16	16	20	25
Pump power consumption	W	15 - 70	15 - 70	15 - 70	6 - 87
Fan power consumption	W	15 - 42	15 - 42	15 - 76	15 - 76 (2 x fan)
Electrical classification		I			
Overvoltage category		II			
Fan rotational speed	rpm	550	550	700	600
Sound power level for A7W35 according to EN 12102 and EN ISO 9614-1	dB(A)	58	59	65	65
Sound power level for A7W45 according to EN 12102 and EN ISO 9614-1	dB(A)	58	59	65	65
Sound power level for A7W55 according to EN 12102 and EN ISO 9614-1	dB(A)	58	60	66	66
Maximum DHW flow temperature	°C	60	63	63	63
Minimum air temperature (heating and cylinder charging)	°C	-15	-20	-20	-20
Maximum air temperature (heating)	°C	28			
Maximum air temperature (cylinder charging)	°C	46			
Maximum air flow	m^3/h	2,000	2,700	3,400	5,500
ErP rating (@ 35°C)		A++	A++	A+	A++
ErP rating (@ 55°C)		A+	A++	A+	A+

Heating circuit		5kW	8kW	11kW	15kW
Minimum operating pressure	bar	0.1			
Maximum operating pressure	bar	3.0			
Heating circuit water contents in the heat pump	l	1.1	1.6	2.1	2.7
Minimum heating circuit water contents	l	17	21	35	60
Minimum volume flow rate	l/h	380	380	540	1,200
Nominal volume flow rate	l/h	860	1,400	1,900	2,590
Hydraulic pressure difference	mbar	640	450	300	370

Customer service support contact details

Sales Support

Vaillant products are available to purchase from reputable heating merchants in the UK. To find contact details for your nearest Vaillant sales representative:
Telephone: 0345 602 0262

Technical Enquiries

For technical assistance:
Telephone: 0330 100 3540
Email: aftersales@vaillant.co.uk

General Enquiries

If you have a general enquiry our friendly reception staff will happily point you in the right direction:
Telephone: 0345 602 2922

Renewable Service

For renewable products aftersales servicing and commissioning:
Telephone: 0330 100 3540
Email: aftersales@vaillant.co.uk

Training Enquiries

Vaillant provide many different training courses. For more information:
Telephone: 0345 601 8885
Email: training.enquiriesuk@vaillant-group.com

Vaillant Group UK Ltd
Nottingham Road, Belper, Derbyshire DE56 1JT
Telephone: 0345 602 2922 www.vaillant.co.uk info@vaillant.co.uk

Vaillant
VaillantUK

aroTHERM

Air-to-water heat pump technical specification

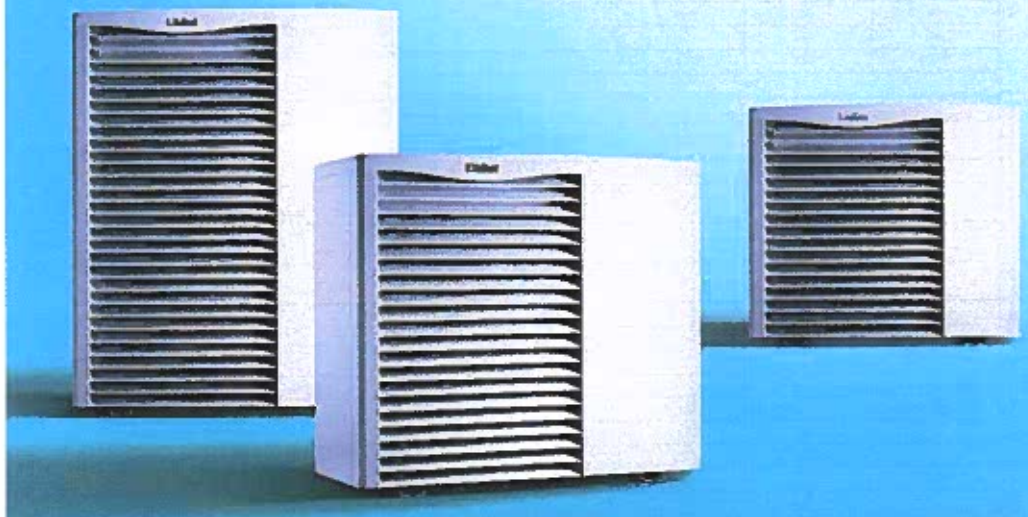

- Compact size for easy siting, possible to fit under a standard window (5, 8 and 11kW)
- Quiet operation with sound power as low as 58dBA (5kW) with permitted planning as low as 3 metres
- Blue fin coated evaporator with anti-hydro coating, improves performance and also gives extra corrosion protection
- MCS accredited (may qualify for government incentives)

vaillantUK
vaillantUK
vaillantUK

■ Heating ■ Hot water ■ Renewables

Because Vaillant thinks ahead.