Arboricultural Impact Assessment

4 Gipsy Lane, Rochdale, OL11 3HA

"BS 5837 2012: Trees in Relation to Design, Demolition and Construction – Recommendations"



ROWBOTTOM'S TREE SERVICES LTD

INDEPENDENT ARBORICULTURAL CONSULTANCY

Date: 20th February 2021

Ref: RTS/27122020

Revision: 002

Head Office: Cheddleton Lodge, West Road, Prestwich, Manchester, M25 3FB.
T: 0161 773 2788 E: bill@rowbottoms-tree-services.co.uk Web: www.rowbottoms.co.uk
Company Reg No: 4862189 VAT No 184 3636 88

4 Gipsy Lane, Rochdale, OL11 3HA:

The following is a pre-development survey and appraisal of trees on and adjacent to the above site.

Its primary purpose being to categorize the trees according to BS 5837:2012 Trees in Relation to Design, Demolition and Construction – Recommendations, so that the Local Planning Authority may review the existing trees in association with the proposed development.

The report and associated plans have been produced for the sole purpose: - to accompany the above planning submission.

Table of Contents

		Page
1.	**INTRODUCTION**	**4**
2.	**SITE SURVEY AND OBSERVATIONS**	**5**
3.	**APPRAISAL**	**7**
4.	**CONCLUSIONS**	**8**
5.	**RECOMMENDATIONS**	**9**
6.	**BIBLIOGRAPHY**	**12**

Appendices

1.	**Qualifications and Experience**	**13**
2.	**Tree Data**	**14**
3.	**Explanatory Notes**	**15**
4.	**Protective Fencing Specifications**	**16**
5.	**Tree Schedule**	**17**
6.	**Tree Quality Assessment and Categorization Criterion**	**24**
7.	**Site Photos**	**26**

1. Introduction:

1.1 This tree survey has been commissioned by Prospect Homes.

1.2 I have undertaken this tree survey following the guidance and recommendations of; 'BS 5837: 2012 Trees in Relation to Design, Demolition and Construction-Recommendations'.

1.3 **Instruction:** I am instructed by Mr Clarke of Cannon Clarke Architects to inspect the significant trees on and adjacent to the site that may be affected by a proposed development and to provide an arboricultural report to accompany a planning submission. The relevant tree information that has been noted and prepared is;

- A schedule of the significant trees on and adjacent to the site, to include basic data and an assessment of their condition, (see appendix 2).
- An appraisal of the impact that the proposed development may have on the trees and as a result, the visual amenity of the locale.
- An initial arboricultural method statement (AMS) setting out basic protective requirements and management needs of the trees to be retained.

1.4 **Documents and information provided:** Mr Clarke provide me with the following documents:

- *CCA.TS.01 Gipsy Lane Rochdale-Topo Survey*
- *Pre-application presentation 20.09.2020*
- *Pre-application planning advise Rochdale Council PREAPP/00094/20*
- *1207_PL-001_Location & Site Plan as proposed*
- *DAS1207v1 Design Statement*
- *1207_PL-003_Plot 1 House Drawing as Proposed*
- *1207_PL-004_Plot 2 House Drawing as Proposed*
- *1207_PL-005_Plot 3 House Drawing as Proposed*

1.5 **Qualification and experience:** I have based this report on my site observations and the provided information, and I have come to conclusions in light of my experience. I have experience and qualifications in arboriculture and list the details in appendix 1.

1.6 **Report scope and limitations:** Construction work often exerts undesirable pressures on existing trees, as do changes in their environment following construction. This report has been prepared to analyse the impact that the proposed development may have to the existing site trees. It further advises on protective requirements and appropriate management needs of the trees, should they be retained on the site. The primary purpose of the report is to provide sufficient tree information to allow the Local Planning Authority to review any tree issues associated with the development proposal.

1.6.1 It should be noted that this report takes no account of indirect structural damage that may arise to buildings as a result of tree induced soil volume changes. Such damage can occur to buildings built on shrinkable clay sub-soils and will be more prevalent during prolonged drought conditions. Also buildings built on shrinkable soils following tree removal can suffer heave affects as the soil rehydrates. These issues should be addressed during the design of the proposed development *(National House Building Council-NHBC 2011 part 4.2 building near trees).* Also, this report does not take into account damage to drains and underground services that may be due to tree root activity. If damaged, drains can allow roots to penetrate them. If, however, they are in good repair tree roots have little capacity to access them. A drainage expert could give more advice.

2. Site visit and observations:

2.1 Site visit: I carried out an unaccompanied site visit on 27th December 2020. All my observations were from ground level without detailed investigations and I estimated all dimensions unless otherwise indicated. The weather at the time of inspection, although dry and overcast with average visibility, was acceptable to proceed with the tree survey.

2.2 Brief site description: 4 Gipsy Lane is a detached two storey property set within a large garden area of approximately 0.2 hectares. The site is bound by mature trees which are predominately located along the east, south and west boundaries.

2.2.1 Site Aspect and Topography:

- The existing house and front boundary to the grounds are north east facing.
- The ground rises up from the Gipsy Lane highway by approximately 1.8 metres to the garden level, which from there on is relatively flat with no significantly raised features.

2.2.2 Preliminary Geological Information:

Soil Texture:	Sandy
Soil pH:	Slightly Acid
Drainage:	Freely Draining
Fertility:	Low
Carbon:	Low
Drains to:	Groundwater

(Land Information Systems, 2020)

2.2.3: T*ree Protection Status:* According to Rochdale Council several trees on the site are protected by a Tree Preservation order (TPO 094).

2.3 Identification and location of the trees: The locations of the significant trees are illustrated on the RTS / 27122020 Tree Constraints Plan 001 included with this report. All the relevant information on the trees is contained within this report and the provided documents listed in 1.4 above.

2.4 Tree observations: The trees were not climbed; I visually inspected the significant trees from ground level in accordance with visual tree assessment (VTA) techniques and recorded the information on the schedule included at appendix 5. The assessment has been to a level one of the TRAQ assessment criteria.

2.5 Overview of the trees and other vegetation:

The existing significant trees are predominantly located along the east, south and west boundaries of the site. Among the significant individual trees, are other insignificant shrub masses within the central portions of what is at the moment garden area. Due to their close proximity to the site boundaries, 7 trees on neighbouring land have also been included in the arboricultural survey (T11, T13, T26, T27, T41, G42 and T44). Other trees within the neighbouring land are beyond 6 metres of the boundary fence and are considered, therefore, to be beyond influence of any proposed development.

Existing significant trees, percentage per Category

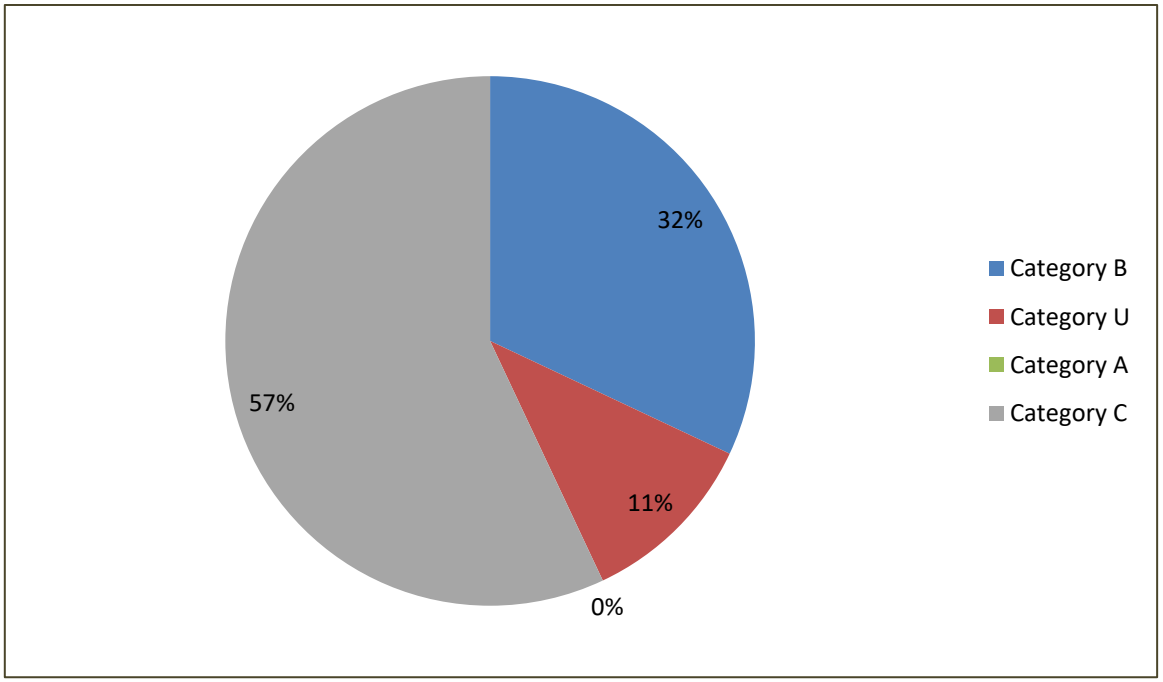

3 APPRAISAL:

3.1 **Relevant references: '**BS 5837:2012 Trees in Relation to Design, Demolition and Construction-Recommendations'.

3.2 **Arboricultural Impact Assessment (AIA):** The proposal is to retain and refurbish the original dwelling house (4 Gipsy Lane), with a much reduce garden boundary. The remainder of the site, which is accessible from Gipsy Lane via a separate entrance, is to be developed by way of the construction of three individual residential dwellings.

- Plot 1; a 4 double bed two storey dwelling
- Plot 2; a 3 double bed and one single bed two storey dwelling
- Plot 3; a 4 double bed mixed single and two storey dwelling.

At this stage I have not been made aware of the locations of proposed new underground drains or other utility services. The locations of new underground services should be designed to avoid passing through the calculated root protection areas (RPA) of the existing site trees. Ideally locate them under the proposed new driveways.

3.3 In order to facilitate the proposed development there will be a requirement to remove a number of the existing trees. Tree removal, however, will be largely restricted to the north east corner of the site. The proposed tree removals will be primarily category C and U trees but to include one category B.

3.3.1 The two significant trees towards the front north east corner of the site, and most prominent as viewed from Gipsy Lane, are T9 and T10 (photo 01). However, due to their condition they have been categorised as U. T10 has significant bark necrosis, as does T9 with honey fungus rhizomorphs evident (photo 02). Removal of these two trees is recommended irrespective of the proposed development. The other proposed tree removals to this north east corner of the site are category C trees and insignificant shrub masses. As a group they do provide a green landscape feature, however, as individual trees their existing competing growth forms are in need of significant arboricultural maintenance. The pragmatic approach to improving the visual amenity of this north east corner of the site; is to remove all the shrub masses and trees required to facilitate the construction of plot 1. Following the removal of these trees and shrubs, and the completed construction of plot 1, there will then be sufficient space in this corner to re-landscape with new more appropriate tree planting to resort and improve the street tree-scape.

3.3.2 Within this north east corner grouping of trees there is one category B tree (T12 a sycamore). Although T12 is not within the proposed footprint area of plot 1, its asymmetrical growth form combined with the proposed removal of adjacent shelter trees would render it inappropriate so close to the build area.

Proposed Tree Removal

Category	Total	Tree Tag / Number
Cat A		
Cat B	1	T12
Cat C	11	T6, T7, T8, G14, T15, T16, SH17, SH19, SH20, T21 & T22
Cat U	3	T9, T10 & SH18

3.4 Following the proposed tree removals, as above, there should be sufficient space to adequately protect the remaining trees from the development process and achieve a harmonious relationship between the retained trees and the newly built dwellings. Due to the asymmetrical growth form of some of the trees which lean towards the proposed build areas a limited amount of facilitation pruning will also be required. The required facilitation pruning is noted in the Recommendations at section 5 of the report.

4 CONCLUSIONS:

4.1 Although the proposed development will require removal of 15 trees and other smaller shrub masses to facilitate, the removal of most of them is considered justified and to be in keeping with good arboricultural maintenance. Given the recommended tree protection methods, little impact on the trees to the south and north corners of the site is expected, with only minimal facilitation pruning being required. The major impact on visual amenity, as viewed from Gipsy Lane, will be due to the loss of the group of trees at the north east front corner of the site. The predominant trees here are T9 and T10, both recommended for removal due to poor condition irrespective of the development proposal. The majority of the remaining trees within this corner of the site are also of lower quality, and removing them to facilitate the development would not be considered unreasonable. Following the clear felling of the front north east corner of the site to facilitate plot 1 there will be sufficient space adjacent to the Gipsy Lane boundary (post development) to affect more appropriate tree planting and thus improve the visual amenity of the street tree-scape. The recommended fencing, required to afford protection to the retained neighbour's trees (T11 and T13), should continue beyond the RPA of these trees to provide protection of the soil structure within the area set aside for the new tree planting.

4.2 Tree works required to facilitate the proposed development and protective measures required to avoid damage to trees to be retained, are noted in the Recommendations at section 5 of the report.

4.3 **Other Considerations:** Trees by their very nature have structures that allow bats to shelter or roost in them, more so with moribund and decayed trees. All species of bats are protected by the Wildlife and Countryside Act 1981 (as amended), the Conservation (Natural Habitats) regulations 1994 and the Countryside Act and Rights of Way Act 2000. Also it is an offence to disturb or destroy nesting birds. Appropriate ecological assessments should be undertaken to avoid contravention of the above.

5 RECOMMENDATIONS:
Arboricultural Method Statement;

5.1 Prior to any other activity on the site the following arboricultural works should be undertaken.

Table 1 Tree works:

Tree	Tree Work	Priority
T6, T7, T8, T9, T10, T12, G14, T15, T16, SH17, SH18, SH19, SH20, T21, T22 and all other shrub masses within the build area.	Fell to ground level and grind out the remaining stumps	Prior to any other site works
T1 and T2	Crown lift to obtain a branch height clearance above ground level of approximately 4 metres	Prior to any other site works
T3	Crown reduce the west crown spread of the tree by approximately 3 metres to obtain a final west crown spread of 6 metres. Longer branches to be pruned back to a suitable lateral branch union, so maintaining a natural tree silhouette.	Prior to any other site works
T4	Crown reduce the west crown spread of the tree by approximately 2.5 metres to obtain a final west crown spread of 5.5 metres. Longer branches to be pruned back to a suitable lateral branch union, so maintaining a natural tree silhouette.	Prior to any other site works
T5	Crown reduce the west crown spread of the tree by approximately 2 metres to obtain a final west crown spread of 5 metres. Longer branches to be pruned back to a suitable lateral branch union, so maintaining a natural tree silhouette.	Prior to any other site works
T23	Crown reduce the north and west crown spreads of the tree by approximately 2.5 metres to obtain a final north and west crown spread of 4 metres. Longer branches to be pruned back to a suitable lateral branch union, so maintaining a natural tree silhouette.	Prior to any other site works
T28	Crown reduce the north crown spread of the tree by approximately 3 metres to obtain a final north crown spread of 6 metres. Longer branches to be pruned back to a suitable lateral branch union, so maintaining a natural tree silhouette.	Prior to any other site works
T30	Crown reduce the north crown spread of the tree by approximately 5 metres to obtain a final north crown spread of 7 metres. Longer branches to be pruned back to a suitable lateral branch union, so maintaining a natural tree silhouette.	Prior to any other site works
T35	Crown reduce the north crown spread of the tree by approximately 3 metres to obtain a final north crown spread of 6 metres. Longer branches to be pruned back to a suitable lateral branch union, so maintaining a natural tree silhouette.	Prior to any other site works
T39	Crown reduce the north and east crown spreads of the tree by approximately 2 metres to obtain a final north and east crown spread of 6 metres. Longer branches to be pruned back to a suitable lateral branch union, so maintaining a natural tree silhouette. Prune off dead branches that are greater than 50mm diameter	Prior to any other site works

5.1.1 All the recommended tree works should be of a standard that is in accordance with BS 3998:2010 Tree Work-Recommendations. All the arboricultural work on this site should be undertaken by an arboricultural contractor who is able to comply with the above BS standard. The arboricultural contractor should hold public liability insurance to a minimum of £5 million and employer's liability insurance as required by law. The arboricultural contractor should be able to show competency by means of relevant certification and health and safety policy. Suitable arboricultural contractors can be sourced from the Arboricultural Association approved contractor list or the Local Planning Authority occasionally has lists of competent contractors.

5.1.2 **The advised tree works within this report are recommended in order to facilitate the proposed development on this site. None of these tree works should be undertaken until there has been full approval from the Local Planning Authority.**

5.1.3 Following the above arboricultural works, the existing old shed adjacent to the southern boundary of the site should be demolished and removed. To allow contractor access to the shed, ground protection should be laid on the ground where there is a need to walk and drive light plant machinery within tree RPAs. The ground protection may take the form of 18mm shuttering plyboard laid on top of a 100mm thick layer of wood chips (keep sufficient woodchip arisings aside from the above arboricultural works). Any plant machinery required to demolish the shed should be limited to a 1 tonne dump truck or one tonne mini digger. The shed only is to be removed; no ground excavation is to be undertaken in this area. All light plant machinery should remain sited on the ground protection; it should not under any circumstances be driven onto natural exposed soft ground within a tree RPA.

5.2 After the above tree works have been completed and the old shed has been removed, protective fencing should be erected at the locations indicated on the tree protection plan; RTS / 27122020/TPP 002. The protective fencing should be constructed similar to the specifications at appendix 4. Or in this case the protective fencing could be of 2.0 metre tall herras fencing on rubber feet. The fence panels should be joined together using a minimum of two anti-tamper couplers, the vertical distance between the couplers should be at least 1 metre and uniform throughout the fencing. Signs should be attached to the fencing advising the contractors that this is a construction exclusion zone (CEZ); **keep out.** Either method of fencing installation should be securely pinned to the ground to prevent movement.

5.3 Upon completion of the above arboricultural works and erection of the protective fencing, site construction may proceed following the guidance of AMS. Only on completion of all building activity should the tree protective fencing be removed.

5.4 Fires on the site should be avoided if possible. Where they are unavoidable, they should not be lit in a position where heat could affect tree foliage or branches. The potential size of a fire and wind direction should be taken into account when determining its location and it should be attended at all times until safe enough to leave.

5.5 Any materials whose accidental spillage would cause damage to a tree (e.g. oil, cement washing and vehicle washings etc.) should be stored and handled well away from the outer edge of its RPA.

5.6 All operatives of machinery and heavy plant should be made aware of the construction exclusion zones (CEZ). The operatives are to respect these zones and ensure that no damage occurs to trees due to careless use of machinery.

5.7 Siting of cabins and storage of building materials should be outside of the CEZ. Any proposal to install cabins or store materials within a CEZ should be agreed with the appointed arboriculturist and the Local Planning Authority prior to such installation.

5.8 A project arboriculturist should be appointed to ensure that compliance with tree protection requirements are upheld. The appointed arboriculturist should be an individual acceptable to the local authority. They must have a good understanding of the project requirements and be suitably qualified to understand the hazards associated with development near trees. They should work closely with the site manager, and have the authority to stop works until any major issues which could affect the retained trees have been resolved. They should keep the local authority updated at each stage of the project, including reporting of any unexpected issues which could affect the trees that are being retained. I can offer this service, or advice on the selection of a suitably qualified and experience individual.

5.9 **Mitigation:** Following completion of all building activity and removal of the tree protective fencing; three replacement trees (Himalayan Birch *Betula utilis*, single stemmed standard trees 12cm to 14cm girth) are to be planted at the location indicated on the tree protection plan RTS/27122020/TPP 002. The tree planting and all other landscaping on the site is to be undertaken using hand held tools only; no plant machinery is to be driven within the tree RPAs.

6 BIBLIOGRAPHY

6.1 BS 5837:2012 Trees in Relation to Design, Demolition and Construction - Recommendations



Mr W. J. Rowbottom. HN Dip ARB M.Arbor.A

Copyright: All rights to this report are reserved. It may only be used by the addresses for the purpose described in point 1.6 above. No part may be reproduced or transmitted in any form, or by any means, electronic, mechanical, by photocopying, recording or otherwise, or stored in any retrieval system of any nature, without the written consent of Rowbottom's Tree Services Ltd. Until all fees rendered by the consultant to the client have been paid in full, the copyright of any documents, forms, statements, maps, plans and other such material will remain vested in Rowbottom's Tree Services Ltd. No unauthorised use of such material may be made by the client, or any other person purporting to be acting on their behalf. It may not be sold, lent, hired out or divulged to any third party not directly involved with this site without the written consent of Rowbottom's Tree Services Ltd.

Appendix 1

Brief qualifications and experience of Mr W. J. Rowbottom.

1. **Qualifications:**
   - Tree surgery craft certificate 1992
   - BTEC Higher National Diploma in Arboriculture 2000 (HN Dip Arb).

2. **International Society of Arboriculture (ISA):**
   - Tree Risk Assessment Qualification (TRAQ).
     This is a systematic qualification of the risks that may be posed by trees within their existing site setting over a given time frame.

3. **Continuing professional development:** Professional member of the Arboricultural Association. M Arbor A. Professional member of the Consulting Arborist Society (CAS).

4. **Experience:** Managed an arboricultural contracting company for 20 years. Practiced arboricultural consultancy since 2010.

Appendix 2

Tree Data (Explanations of):

The data collected and recorded on each tree reflects the recommendations provided in section 4.4.2 of BS 5837:2012 Trees in Relation to Design, Demolition and Construction-recommendations.

Tree number: T (individual tree), G (group of stems or several trees planted together or self-seeded), S (stump of a tree that has been cut at or close to ground level), SH (shrub masses).

Species: Common tree name; specific name recorded in *italics.*

Height: Approximate height of the tree to the nearest metre.

DBH: Stem diameter (recorded in millimetres) measured in accordance with Annex C of the BS 5837:2012.

Crown Spread: A record (to the nearest half metre) of the radial distances between the tree trunk and the end of the further most branches, in the direction of the four cardinal compass points.

Height to Lowest Branch: This parameter estimates the lowest point of the crown above the ground. Minor and dead branches are ignored.

Age: Estimated maturity of the tree; Moribund (at the point of death), Mature (last one third of life expectancy), Early mature (one third to two thirds life expectancy), Young (at less than one third of life expectancy).

Condition: An assessment of tree physiological condition. Good (high vigour and strong growth), fair (average vigour and growth), Poor (low vigour and declining growth).

Category Rating: An assessment to identify the quality and value (in non-fiscal terms) of the existing tree stock, allowing informed decisions to be made concerning which trees should be removed or retained in the event of a development occurring, (for categorisation criterion see appendix 6).

Observations and Comments: A preliminary observation of the tree's structural form and its suitability to the existing site setting. Basic tree management advice may be recommended.

Appendix 3

Explanatory notes

AIA:	Arboricultural Impact Assessment; an assessment that evaluates the effects that the proposed design may have on the existing site trees and any constraints that the trees pose to the design, and where necessary recommend mitigation measures.
GL:	Ground Level.
Measurements:	All dimensions are estimated unless otherwise indicated. Measurements taken with a tape or clinometer are indicated with a *. Less reliable estimated dimensions are indicated with a '?'.
R**PA:**	Root Protection Area; The minimum area around a tree deemed to contain sufficient roots and rooting volume to maintain the tree's viability, and where the protection of roots and soil structure is treated as a priority. The RPA increases with tree size and is calculated from a measurement of the trunk diameter.
Species:	The tree species identification is based on visual identification. The common English name of what the tree appeared to be is listed first followed by the botanical name in italics. In some instances, it may be difficult to quickly and accurately identify a particular tree without further detailed investigation. Where there is some doubt as to the precise species of the tree, the genus is followed by the abbreviation spp; in order to avoid delay in the production of the report. The species listed for groups and hedges represent the main component and there may be other minor species not listed.
TEMPO:	Tree Evaluation Method for Tree Preservation Orders; a method adopted by most Local Authorities of evaluating a tree for TPO status; d*evised by Julian Forbes-Laird.*
TPO:	Tree Preservation Order
TRAQ:	Tree Risk Assessment Qualification. A tree risk qualification methodology; Level one; is a basic visual assessment of an individual tree or a population of trees near to targets of concern, conducted from a specified perspective, to identify obvious defects or specified conditions. Only defects visible from the perspective from which the assessment is made are expected to be identified.
VTA:	Visual Tree Assessment; a non-invasive method of examining the health and structural condition of individual trees, as advised by Mattheck (1993) and Hazard Evaluation by Matheny and Clark (1993). Guidance is also taken from Lonsdale (1999) Principles of Tree Hazard Assessment and Management.

Appendix 4

Protective Fencing Specification

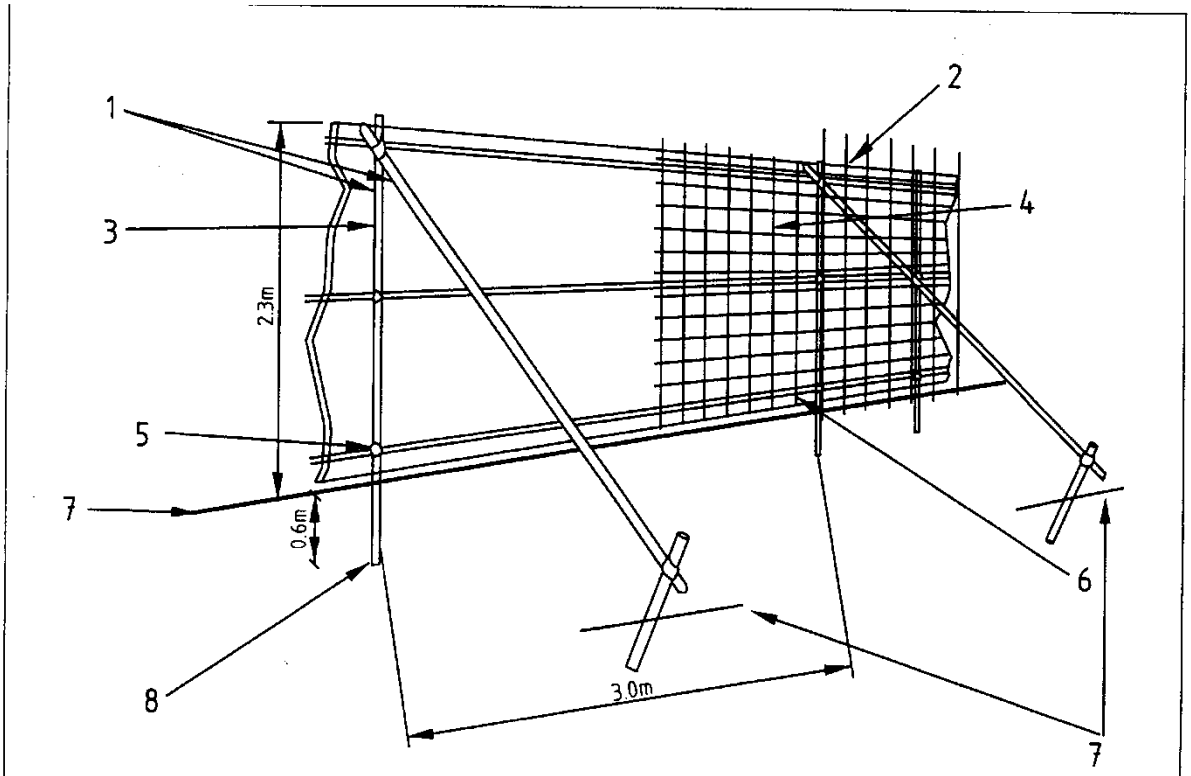

1 Standard scaffold poles

2 Uprights to be driven into the ground

3 Panels secured to uprights with wire ties and where necessary standard scaffold clamps

4 Weldmesh wired to the uprights and horizontals

5 Standard clamps

6 Wire twisted and secured on inside face of fencing to avoid easy dismantling

7 Ground level

8 Approx. 0.6 m driven into the ground

Figure 2 — Protective barrier

Appendix 5

Tree Schedule

Tree No	Species	Tree Height (M) * Crown Height Above GL	DBH (mm) *	Crown Spread (M) *	Height to Lowest Branch (M)	Age	Condition	RPA Radius (M)	RPA Square metres	BS 5837 Category Rating	Observations and Comments
T1	**Lime** *Tilia x europaea*	19.0 4.0	600	N – 5.0 S – 4.0 E – 5.5 W – 6.0	3.0	Mature	Good	7.2	162	B1	Minor dead branches in the crown
T2	**Sycamore** *Acer pseudoplatanus*	15.0 3.0	370	N – 3.0 S – 2.5 E – 4.0 W – 6.5	2.5	Early Mature	Good	4.4	60	B1	Crown asymmetry; minor dead branches in the crown
T3	**Sycamore** *Acer pseudoplatanus*	16.0 2.0	470	N – 2.0 S – 2.0 E – 8.5 W – 9.0	2.5	Mature	Good	5.6	98	B1	Crown asymmetry; minor dead branches in the crown
T4	**Sycamore** *Acer pseudoplatanus*	16.0 4.0	400	N – 2.0 S – 2.0 E – 4.0 W – 8.0	3.0	Early Mature	Fair	4.8	72	C1	Suppressed crown asymmetry; minor dead branches in the crown
T5	**Horse Chestnut** *Aesculus hippocastanum*	17.0 2.0	600	N – 3.0 S – 5.5 E – 8.0 W – 7.0	4.0	Mature	Good	7.2	162	B1	Slight asymmetry
T6	**Sycamore** *Acer pseudoplatanus*	11.0 3.0	370	N – 2.0 S – 3.0 E – 7.0 W – 6.0	3.0	Early Mature	Fair	4.4	60	C1	Suppressed crown asymmetry; sizable dead branches in the crown

Tree No	Species	Tree Height (M) * Crown Height Above GL	DBH (mm) *	Crown Spread (M) *	Height to Lowest Branch (M)	Age	Condition	RPA Radius (M)	RPA Square metres	BS 5837 Category Rating	Observations and Comments
T7	**Sycamore** *Acer pseudoplatanus*	14.0 3.0	370	N – 2.0 S – 4.5 E – 5.0 W – 4.0	3.5	Early Mature	Fair	4.4	60	C1	Dead branches in the upper crown
T8	**Lime** *Tilia x europaea*	12.0 2.0	310	N – 2.0 S – 5.0 E – 5.0 W – 5.0	3.0	Early Mature	Fair	3.7	43	C1	Crown asymmetry
T9	**Horse Chestnut** *Aesculus hippocastanum*	12.0 3.0	630	N – 6.0 S – 2.0 E – 8.5 W – 6.0	2.0	Mature	Poor	7.5	176	U	Small decay cavity at trunk base honey fungus rhizomorphs under the trunk bark
T10	**Horse Chestnut** *Aesculus hippocastanum*	13.0 3.0	660	N – 3.0 S – 6.0 E – 7.5 W – 7.0	3.0	Mature	Poor	7.9	196	U	Bark necrosis of trunk and scaffold branch bark
T11	**Sycamore** *Acer pseudoplatanus*	16.0 3.0	440	N – 2.0 S – 7.0 E – 4.0 W – 3.0	5.0	Mature	Good	5.2	84	B1	Slight asymmetry
T12	**Sycamore** *Acer pseudoplatanus*	12.0 4.0	404 comb	N – 5.0 S – 2.0 E – 3.0 W – 3.0	4.0	Early Mature	Good	4.8	72	B1	Two stemmed tree; slight asymmetry

Tree No	Species	Tree Height (M) * Crown Height Above GL	DBH (mm) *	Crown Spread (M) *	Height to Lowest Branch (M)	Age	Condition	RPA Radius (M)	RPA Square metres	BS 5837 Category Rating	Observations and Comments
T13	**Beech** *Fagus sylvatica*	16.0 2.5	520 comb	N – 3.0 S – 5.0 E – 3.0 W – 3.0	4.0	Mature	Fair	6.2	120	C1	Multi-stemmed tree with included bark unions between stems; very possibly an unmaintained part of an intended beech hedgerow.
G14	**Beech** *Fagus sylvatica*	16.0 1.0	280 Av	N – 5.0 S – 9.0 E – 1.0 W – 1.0	1.0	Mature	Fair	3.3	34	C2	Group of closely planted linear row of trees; very possibly an unmaintained part of an intended beech hedgerow.
T15	**Sycamore** *Acer pseudoplatanus*	16.0 4.0	581 comb	N – 7.0 S – 6.0 E – 4.0 W – 4.0	3.0	Mature	Fair	6.9	149	C1	Included bark unions at multi-stem joints; minor dead branches in the crown.
T16	**Rowan** *Sorbus aucuparia*	13.0 1.0	295	N – 5.5 S – 2.0 E – 2.0 W – 4.0	1.5	Mature	Fair	3.5	38	C1	Asymmetry; minor dead branches in the crown
SH17	**Laurel** *Prunus laurocerasus*	6.0 0.2	200	N – 3.0 S – 3.0 E – 5.5 W – 3.0	0.2	Mature	Fair	2.4	18	C1	Unmaintained shrub
SH18	**Cotoneaster** *Cotoneaster cornubia*	3.0 1.0	300	N – 4.0 S – 4.0 E – 4.0 W – 4.0	1.5	Moribund	Poor	3.6	40	U	Medium sized shrub; in decline

Tree No	Species	Tree Height (M) * Crown Height Above GL	DBH (mm) *	Crown Spread (M) *	Height to Lowest Branch (M)	Age	Condition	RPA Radius (M)	RPA Square metres	BS 5837 Category Rating	Observations and Comments
SH19	*Viburnum spp*	3.0 1.0	280	N – 3.0 S – 3.0 E – 3.0 W – 3.0	0.5	Mature	Fair	3.3	34	C1	Medium sized shrub
SH20	*Viburnum spp*	3.0 0.5	180	N – 2.0 S – 2.0 E – 2.0 W – 2.0	0.2	Mature	Fair	2.1	13	C1	Medium sized shrub
T21	**Maple** *Acer platanoides* *'Crimson King'*	13.0 2.0	250	N – 6.0 S – 1.0 E – 2.0 W – 5.0	2.0	Early Mature	Fair	3.0	28	C1	Asymmetry; minor dead branches in the crown
T22	**Ash** *Fraxinus excelsior*	16.0 4.0	333	N – 6.0 S – 6.0 E – 4.0 W – 4.0	4.0	Mature	Fair	3.9	47	C1	Sizable dead branches in the crown
T23	*Turkey Oak* *Quercus cerris*	20.0 2.5	450	N – 6.5 S – 3.5 E – 3.0 W – 6.5	3.5	Mature	Good	5.4	91	B1	Slight asymmetry; minor dead branches in the crown
T24	**Beech** *Fagus sylvatica*	18.0 1.5	295	N – 6.5 S – 3.0 E – 4.0 W – 3.0	2.0	Early Mature	Fair	3.5	38	C1	Tall slender tree; minor dead branches in the crown

Tree No	Species	Tree Height (M) * Crown Height Above GL	DBH (mm) *	Crown Spread (M) *	Height to Lowest Branch (M)	Age	Condition	RPA Radius (M)	RPA Square metres	BS 5837 Category Rating	Observations and Comments
T25	**Beech** *Fagus sylvatica*	20.0 2.0	350	N – 6.0 S – 5.0 E – 3.0 W – 5.0	3.0	Mature	Fair	4.2	55	B1	Some included bark unions; minor dead branches in the crown
T26	**Sycamore** *Acer pseudoplatanus*	17.0 10.0	550	N – 6.0 S – 6.0 E – 6.0 W – 4.0	8.0	Mature	Poor	6.6	136	U	Bark necrosis to lower trunk section; dead branches in the crown
T27	**Sycamore** *Acer pseudoplatanus*	17.0 2.0	400	N – 3.0 S – 6.0 E – 4.0 W – 6.0	3.0	Mature	Fair	4.8	72	B1	Small decay cavity to trunk base; minor dead branches in the crown
T28	**Sycamore** *Acer pseudoplatanus*	20.0 4.0	510	N – 9.0 S – 6.0 E – 4.0 W – 4.0	5.0	Mature	Good	6.1	116	B1	Asymmetry; minor dead branches in the crown
T29	**Sycamore** *Acer pseudoplatanus*	19.0 3.0	420	N – 5.0 S – 5.0 E – 3.0 W – 3.0	4.0	Mature	Fair	5.0	78	C1	Suppressed asymmetry; small decay cavity to west side buttresses; minor dead branches in the crown
T30	**Sycamore** *Acer pseudoplatanus*	19.0 6.0	500	N – 12.0 S – 4.0 E – 2.0 W – 5.0	4.0	Mature	Fair	6.0	113	B1	Asymmetry; minor dead branches in the crown

Tree No	Species	Tree Height (M) * Crown Height Above GL	DBH (mm) *	Crown Spread (M) *	Height to Lowest Branch (M)	Age	Condition	RPA Radius (M)	RPA Square metres	BS 5837 Category Rating	Observations and Comments
T31	**Sycamore** *Acer pseudoplatanus*	18.0 4.0	559 comb	N – 4.0 S – 6.0 E – 6.0 W – 2.0	3.0	Mature	Fair	6.7	141	B1	Asymmetry; minor dead branches in the crown
T32	**Beech** *Fagus sylvatica*	19.0 3.0	740	N – 4.0 S – 7.0 E – 4.0 W – 6.0	1.8	Mature	Good	8.8	243	B1	Asymmetry; minor dead branches in the crown
T33	**Sycamore** *Acer pseudoplatanus*	19.0 6.0	350	N – 4.0 S – 3.0 E – 4.0 W – 4.0	4.0	Mature	Poor	4.2	55	C1	Tall slender tree; dead branches in the crown
T34	**Beech** *Fagus sylvatica*	20.0 3.0	700	N – 7.0 S – 4.0 E – 5.0 W – 6.0	4.0	Mature	Fair	8.4	221	C1	Trunk damage and decay to lower south side
T35	**Sycamore** *Acer pseudoplatanus*	19.0 4.0	600	N – 9.0 S – 2.0 E – 4.0 W – 7.0	5.0	Mature	Fair	7.2	162	B1	Asymmetry; minor dead branches in the crown
T36	**Beech** *Fagus sylvatica*	18.0 2.0	260	N – 4.0 S – 2.0 E – 3.0 W – 2.0	2.5	Early Mature	Fair	3.1	30	C1	Tall slender tree
T37	**Beech** *Fagus sylvatica*	19.0 2.0	360	N – 5.0 S – 3.0 E – 2.0 W – 2.0	3.0	Early Mature	Fair	4.3	58	C1	Tall slender tree

Tree No	Species	Tree Height (M) * Crown Height Above GL	DBH (mm) *	Crown Spread (M) *	Height to Lowest Branch (M)	Age	Condition	RPA Radius (M)	RPA Square metres	BS 5837 Category Rating	Observations and Comments
T38	**Sycamore** *Acer pseudoplatanus*	17.0 4.0	550	N – 6.0 S – 4.0 E – 8.0 W – 8.0	2.0	Mature	Fair	6.6	136	C1	Low vigour; asymmetry; minor dead branches in the crown
T39	**Sycamore** *Acer pseudoplatanus*	16.0 4.0	530	N – 8.0 S – 3.0 E – 8.0 W – 6.0	2.0	Mature	fair	6.3	124	C1	Low vigour; asymmetry; minor dead branches in the crown
T40	**Sycamore** *Acer pseudoplatanus*	16.0 3.0	340	N – 5.0 S – 3.0 E – 4.0 W – 3.0	3.0	Early Mature	Fair	4.0	50	C1	Suppressed asymmetry
T41	**Dead Tree**	N/A	N/A	N/A	N/A	N/A	Dead	N/A	N/A	U	Neighbour's dead tree
G42	**Holly** *Ilex aquifolium*	10.0 3.0	300 Av	N – 2.0 S – 2.0 E – 2.0 W – 2.0	3.0	Mature	Fair	3.6	40	C1	Group of 3 holly trees; in the neighbouring garden
T43	**Holly** *Ilex aquifolium*	6.0 2.0	100 Av	N – 1.0 S – 2.0 E – 2.0 W – 1.0	1.8	Early Mature	Fair	1.2	4.5	C1	Hedgerow shrub
T44	**Juniper** *Juniperus spp*	3.0 0.5	200	N – 1.0 S – 1.0 E – 0.5 W – 1.5	0.5	Mature	Fair	2.4	18	C1	Neighbour's tree

Appendix 6

Tree Quality Assessment and Categorization Criterion	**Identification on the plan**
Category U: Trees unsuitable for retention; Trees which are in such a condition that they cannot realistically be retained as living trees in the context of the current land use for longer than 10 years. These trees, however, can have existing or potential conservation value. They could, therefore, be up graded from a U category if issues concerning their safety can be appropriately managed.	**Dark Red**
Trees to be considered for retention; **Category A: trees of high quality** **Have an estimated remaining life expectancy of at least 40 years.**	**Light Green**
Category B: **Trees of moderate quality** **Have an estimated remaining life expectancy of at least 20 years.**	**Mid Blue**
Category C: Trees of low quality. **Have an estimated life expectancy of at least 10 years, or young trees with a stem diameter below 150mm.**	**Grey**

For a tree to qualify under any given category, it should fall within the scope of that categories definition (U, A, B, C).
Trees in categories A to C should then qualify under one or more of three subcategories (1, 2, and 3). The subcategories 1, 2 and 3 are intended to reflect arboricultural and landscape qualities, and cultural values, respectively. These definitions are described below:

Arboricultural Qualities:

Sub-Category A1:

Trees that are particularly good examples of their species, especially if rare or unusual; or those that are essential components of groups or formal or semi-formal arboricultural features (e.g. the dominant and / or principal trees within an avenue).

Sub-Category B1: Trees that might be included in category A, but have been downgraded because of impaired condition (e.g. presence of significant though remediable defects, including unsympathetic past management and storm damage), such that they are unlikely to be suitable for beyond 40 years; or trees lacking the special quality necessary to merit the category A designation.

Sub-Category C1: Unremarkable trees of very limited merit or such impaired condition that they do not qualify in higher categories.

Landscape Qualities:

Sub-Category A2: Trees, groups or woodlands of particular visual importance as arboricultural and / or landscape features.

Sub-Category B2: Trees present in numbers, usually growing as groups or woodlands, such that they attract a higher collective rating than they might as individuals; or trees occurring as collectives but situated so as to make little visual contribution to the wider locality.

Sub-Category C2: Trees present in groups or woodlands, but without this conferring on them significantly greater collective landscape value; and / or trees offering low or only temporary / transient benefits.

Cultural Values:

Sub-Category A3: Trees or woodlands of significant conservation, historical, commercial or other value (e.g. veteran trees or woodland pasture).

Sub-Category B3: Trees with material conservation or other cultural value.

Sub-category C3: Trees with no material conservation or other cultural value.

Appendix 7

Photo 01:



Photo 02:

