Regent

Unique to BMI Redland and characterised by its high, bold roll profile, the Regent tile is manufactured with a choice of through-coloured or granular finishes in six different colours offering flexibility and compatibility to suit all roof types.



KEY ADVANTAGES

- Unique high, bold roll profile
- Our lowest pitch capability tile – ideal for extensions and lean-to roofing

PRODUCT DATA

Size (overall)	418 x 332mm
Minimum Pitch and Headlap	
Through coloured	12.5° at 100mm headlap / 17.5° at 75mm headlap
Granular	22.5° at 100mm headlap / 30° at 75mm headlap
Maximum Pitch (subject to fixing specification)	90°
Maximum Headlap	125mm
Minimum Gauge/Batten Spacing	293mm
Maximum Gauge/Batten Spacing	
Through coloured	below 17.5° at 318mm / 17.5° and over 343mm
Granular	below 30° at 318mm / 30° and over 343mm
Hanging Length (approx.)	397mm
Cover (all figures are net and do not allow for wastage)	
Linear cover of 1 tile	300mm
Covering capacity	10.5 tiles/m² at 318mm gauge / 9.7 tiles/m² at 343mm gauge
Weight (at max. gauge approx.)*	46kg/m² at 318mm gauge / 43kg/m² at 343mm gauge
per pallet, including pallet (approx.)	1.18 tonnes
per 1000	4.43 tonnes
Battens Required (at max. gauge)	2.92m/m²
Batten Size	
Rafter centres up to 450mm	38 x 25mm
Rafter centres up to 600mm	50 x 25mm
Fixing Clips	Eaves, Verge & Tile Clips
Nail Size for Tiles**	75 x 3.35mm (A/A)
Pallet Quantities	Tiles per pallet 252 / Tiles per pack 42 / Packs per pallet 6

*All weights nominal **(A/A) Aluminium Alloy

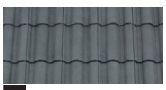
30 Slate Grey


34 Terracotta

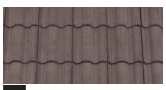
36 Tudor Brown

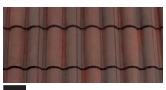
52 Breckland Brown

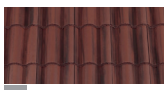
78 Rustic Red (Coated)

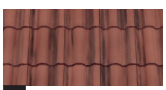
39 Farmhouse Red

FITTINGS & ACCESSORIES

VERGE

Cloaked Verge
Ambi-Dry Verge
Rapid Verge

HIP PRODUCTS

Third Round Hip
Dry Hip
Rapid Hip

VALLEY PRODUCTS

GRP 125 Valley
Dry Valley

RIDGE PRODUCTS

Half Round Ridge
Half Round Monoridge

VENTILATION SYSTEMS

RedVent EavesVent
RedVent 25 Over-Fascia Vent
Top Edge Abutment Ventilation
DryVent Ridge
Rapid Vented Ridge
Uni-Vent Rapid Ridge/Hip
DryVent Monoridge
RedLine Ventilation Tile
Rapid Roof Vent
8.8k ThruVent Tile



BMI Redland

Regent Product Codes

TILES	
Standard Tile	3401
UNDERLAYS	
Spirtech 400 2S underlay	9202
Divoroll Elite 2S	9157
Divoroll Universal 2S	9156
EAVES PRODUCTS	
RedVent EavesVent 350-450mm (6m)	9189
RedVent EavesVent 450-600mm (6m)	9190
Extension Trays 350-450mm (6m)	9498
Extension Trays 450-600mm (6m)	9499
Rapid EavesVent 2-in-1 Tray	9988
Rapid EavesVent Rafter Roll (6m)	9984
RedVent 25 Over-Fascia Vent (6m)	9593
Underlay Support Tray (1.5m)	9076
Eaves Comb Filler (1m)	9965
VERGE PRODUCTS	
Cloaked Verge LH	7275
Cloaked Verge RH	7276
Half Tile	7730
DryVerge (Pack of 18 LH & 18 RH)	9390
DryVerge Gable End Pack	9880
Rapid DryVerge (Pack of 18 LH & 18 RH)	9391
Rapid DryVerge Gable End Pack	9881
HIP PRODUCTS	
Dry Hip (2.7m)	9046
Continuous Hip (5m)	9028
Third Round Hip/Ridge Junction	9521
Uni-Vent Rapid Ridge/Hip (10m)	9313
Uni-Vent Rapid Hip Support Tray (1.2m)	9069
Third Round Hip (without nail holes)	8122
Third Round Hip (with nail holes)	7411
Hip Iron	9258
Third Round Block-End Hip	7784
Dentil Slip	7174
Mortar Bedded Fixing Kit	9314

VALLEY PRODUCTS	
GRP 125 Valley (3m)	9595
Dry Valley (Low Profile)(3m)	9574
Universal Valley Trough Tile	7175
ABUTMENT PRODUCTS	
Wakaflex Rapid Flashing	
Top Edge Abutment Ventilation Pack (3m)	9542
Bonding Gutter (3m)	9578
RIDGE PRODUCTS	
DryVent Ridge (2.7m)	9096
Uni-Vent Rapid Ridge/Hip (10m)	9313
Continuous Ridge (5m)	9304
Ridge Vent Terminal	7253
Ridge Vent Terminal Adaptor	9175
Flexible Pipe (100 to 100mm)	9172
Gas Flue Ridge Terminals	7241
Gas Flue Extension Adaptor	9143
Gas Flue Blanking Plates	9098
Half Round Ridge	8101
Half Round Ridge Block-End	7519
DryVent Monoridge (2.7m)	9079
Half Round Monoridge	7203
Half Round Block-End Monoridge LH	7266
Half Round Block-End Monoridge RH	7267
Dentil Slip	7174
Mortar Bedded Fixing Kit	9314
Ridge End Cap Half Round	9772
Ridge End Cap Half Round	9772
VENTILATION TILES	
RedLine Vent Tile	9115
8.8k ThruVent Tile	7930
Flexible Pipe (100 to 100mm)	9172
FIXING	
Tile Clip	9246
Verge Clip LH	9121
Verge Clip RH	9298
Eaves Clip inc Nail	9287
Tile Clip Nail (680)	9333
Tile Nail (420)	9337
Kro-Clip (50)	9142
Innofix Clip (500)	9821

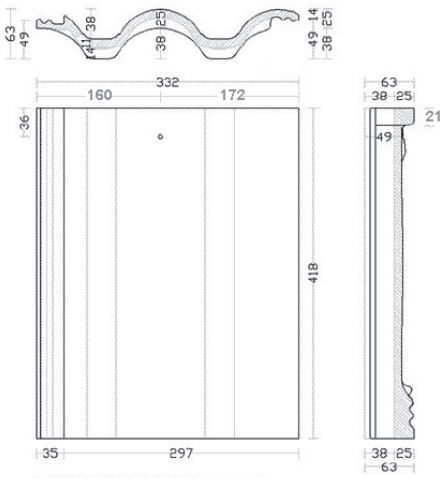

BMI UK & Ireland
BMI House,
2 Pitfield, Kiln Farm,
Milton Keynes, MK11 3LW
+44 (0) 3705 601000

www.bmigroup.com/uk

We are committed to continuously enhancing and improving our product range. We reserve the right to change our product specifications. We reserve the right to correct any typographical or clerical error or omission. For the latest information contact customer service.