Oldham Road Phase 1, Rochdale Development

Drainage Strategy

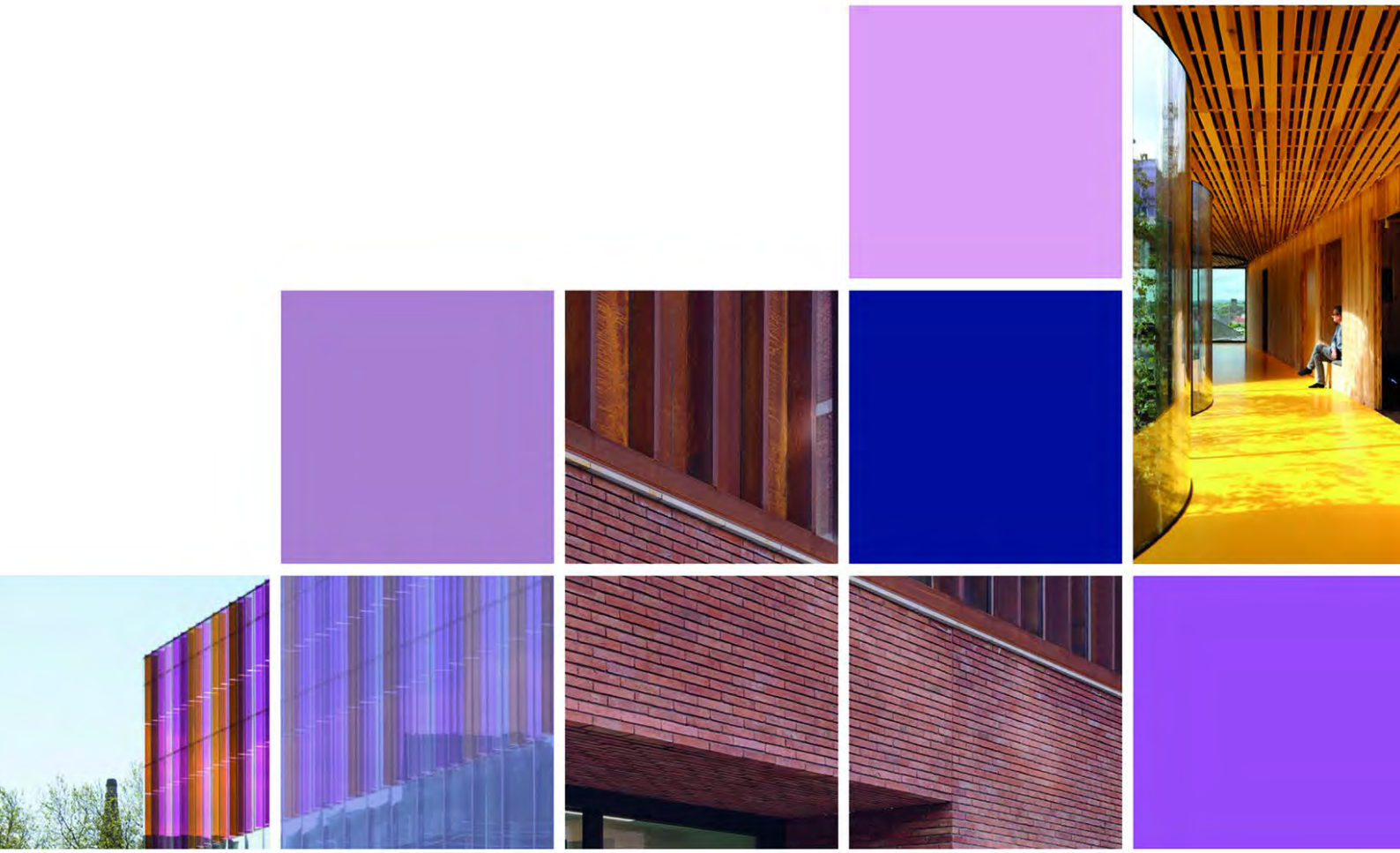

boothking

Doc. Ref.	14251-BKP-ZZ-XX-RP-C-00002	Client	Willmott Dixon Construction Ltd
Project Number	14251	Current Revision	P01

Rev.	Prepared by	Checked by	Approved by	Stage	Status	Date	Rev description
P01	EZ	RS	AM	4	S4	17.02.2025	First Issue

This document uses revision codes in accordance with ISO EN 19650:

P##: Preliminary (non-contractual) - review, comment or approval.
C##: Contractual - Approved for stage completion.

This document uses status codes in accordance with ISO EN 19650:

Work in progress
S0: WIP

Shared (non-contractual)
S1: Coordination
S2: Information
S3: Review
S4 & S5: Approval

Published (contractual)
A1, **An**, etc. (where "n" relates to the project stage)

This document uses project stages in accordance with the IStructE Structural Plan of Work 2020:

2: Concept
3: Coordination
4: Technical Design
4.5 Production Design
5: Construction
6: Handover

Contents

1. Introduction & Scope **4**
1.1. Introduction 4
1.2. Scope 4
2. Existing Site **5**
2.1. Location 5
2.2. Site Levels 5
2.3. Existing Drainage 6
2.4. Geology 7
2.5. Hydrogeology 7
3. Flood risk **8**
3.1. Fluvial/ Tidal Flooding 8
3.2. Surface Water Flooding 9
3.3. Groundwater Flooding 9
3.4. Flooding from Anthropogenic Sources 10
4. Surface Water **11**
4.1. Development Proposals 11
4.2. Climate Change 11
4.3. Sustainable Drainage Systems (SuDS) 12
5. Drainage Strategy **13**
5.1. Proposed Foul Water Network 13
5.2. Proposed Surface Water Network 13
6. Conclusions & Recommendations **14**
6.1. Conclusions 14
7. Maintenance Plan **15**
8. References
APPENDIX A
APPENDIX B
APPENDIX C
APPENDIX D

1. Introduction & Scope

1.1. Introduction

Booth King Partnership Ltd. (BKP) were commissioned by our client Willmott Dixon Construction Ltd to carry out Drainage Strategy (DS) to support the planning application erection of the apartment block at Milnrow Road, Deeplish, Rochdale, Greater Manchester, England, OL16 1UA.

This DS has been prepared in accordance with the National Planning Policy Framework (NPPF), Flood Risk and Coastal Change(www.gov.uk/guidance/flood-risk-and-coastal-change) and Planning Practice Guidance, as well as Environment Agency (EA) Guidance and the local Strategic Flood Assessment (SFRA). A full list of documents used to inform this report is shown in the Reference section.

Although the site has an area of less than 1 hectare, it lies within Flood Zone 1, therefore an FRA is not compulsory in accordance with the NPPF. The proposed development should not increase the risk of flooding elsewhere and this FRA has therefore been prepared to demonstrate that this has been achieved. Consideration has also been given to BREEAM accreditation, including the requirements of Pol 03, the risk of pollution to controlled waters and the site conditions prior to, during and after development.

The Drainage Strategy Report considers the management of surface water run-off including climate change.

It is the assumption wherever possible that ground levels post-development will remain as close to existing as is practical. If this or other key assumptions change, then the conclusions within this report may need to be reassessed to check that they are still applicable.

This report is based on information obtained from the recently undertaken site topographical survey, Ground Investigation Report, and drainage record plans.

1.2. Scope

Our client Willmott Dixon Construction Ltd has requested Booth-King Partnership Ltd. to undertake a drainage design scheme and provide a drainage strategy for the purposes of planning permission from the Rochdale Borough Council for a site, shown in Figure 1.

2. Existing Site

2.1. Location

The site is located at the centre of Rochdale and is surrounded a mixture of houses, small businesses and the Central Retail Park to the east. The proposed development being 0.82ha, Phase 1(red line boundary) of a larger residential development (blue line boundary) and it is located at Ordnance Survey Grid Reference E: 389966, N: 413006.

A Site Location Plan can be found in Appendix A.

Figure 1. Existing Site

2.2. Site Levels

Several topographic surveys of the site have been completed with the latest showing that Phase 1 site slopes from the southwest boundary of site with levels circa 140.78m AOD towards the north boundary with low levels of 137.20m AOD to

The topographical survey is presented Appendix B.

2.3. Existing Drainage

Several CCTV and ground penetration radar surveys have conducted prior to the remediation and after. There were separate surface water network and foul water network are within the site boundary which have since been removed or abandoned.

During the above said surveys, several connections from the private network have been established to the United Utilities combined network.

There is a 600 x 900mm combined public sewer located to the east of the site within Oldham Road. The sewer flows in a north-westerly direction. There is a combined public sewer (225mm) located to the north of the site within Milnrow Road. The sewer flows in a westerly direction. There were also defects on this sewer limiting access to survey). There is a 900mm combined public sewer located to the west of the site within Drake Street (along the north-western side of the Metrolink tramline). The sewer flows in a north-easterly direction. There is a 750mm combined public sewer located to the south of the site within Richard Street. The sewer flows in a north-westerly direction, crosses below the tramline before connecting into the above mentioned 900mm sewer.

Refer to Appendix B for United Utilities Map.

Figure 2. United Utilities Map Extract

2.4. Geology

Made Ground is not indicated to be present on BGS mapping, made ground associated with historic development is present on site, in addition to the infilled canal basins and infilled canal.

The BGS maps confirm that the site is primarily underlain by Glaciofluvial Deposits (superficial deposits) comprising sand and gravel with some clay and silt.

The bedrock geology is described as the Pennine Lower Coal Measures Formation (sandstone, siltstone, mudstone, some coal).

The site is not located within a Groundwater Source Protection Zone

2.5. Hydrogeology

According to Phase 2: There are two groundwater abstraction points located within 1km of the site boundary. Both licences are noted to have been revoked. The nearest entry is recorded 453m northeast and is operated by Rochdale MBC for boiler feed and private water supplies (domestic).

No potable groundwater abstractions are located within 1km of the site.

The site is not located within a Source Protection Zone.

The nearest surface water feature is the River Roch, flowing east to west, recorded 221m north of the site. It has flow of less than 5 cumecs, and a River Quality GQA Grade C.

There are thirteen recorded surface water abstraction points located within 1km of the site boundary. The nearest are two abstractions for the production of energy (hydroelectric power) 248m to the north. Two further abstractions are located 249m north to transfer water between sources for remedial river/wetland support. There are no potable surface water abstractions within 1km of the site.

3. Flood risk

The Environment Agency Maps indicate that the site is located wholly within Flood Zone 1.

3.1. Fluvial/ Tidal Flooding

The site is currently located within an area defined as Flood Zone 1.

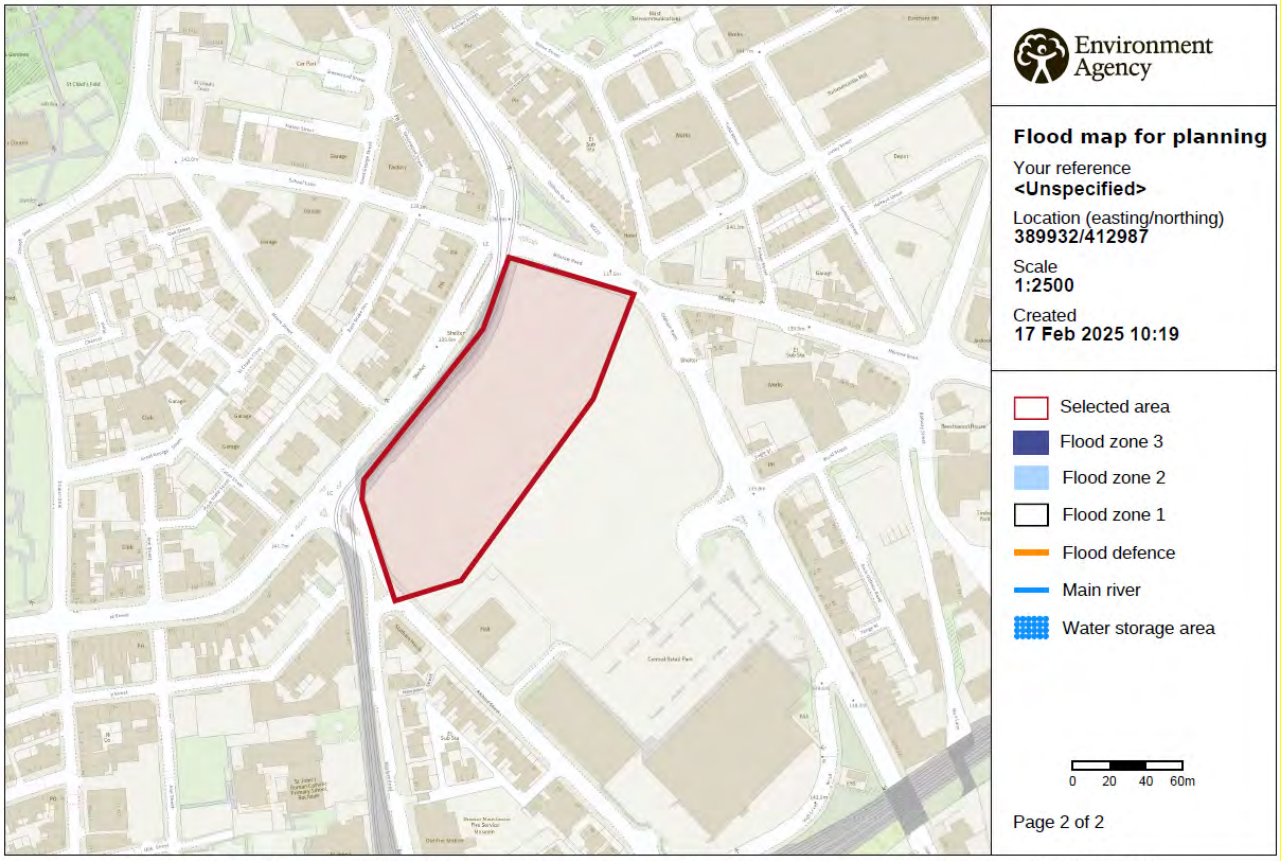

© Environment Agency copyright and / or database rights 2024. All rights reserved. © Crown Copyright and database right 2024. Ordnance Survey licence number AC0000807064.

Figure 3. Extract from EA Flood Map for Planning

No further action is required.

3.2. Surface Water Flooding

The EA's surface water flood map shown in Figure 5 shows the flooding risk is low for most of the site, however within the centre of the overall development, with small areas that are identified as high chance.

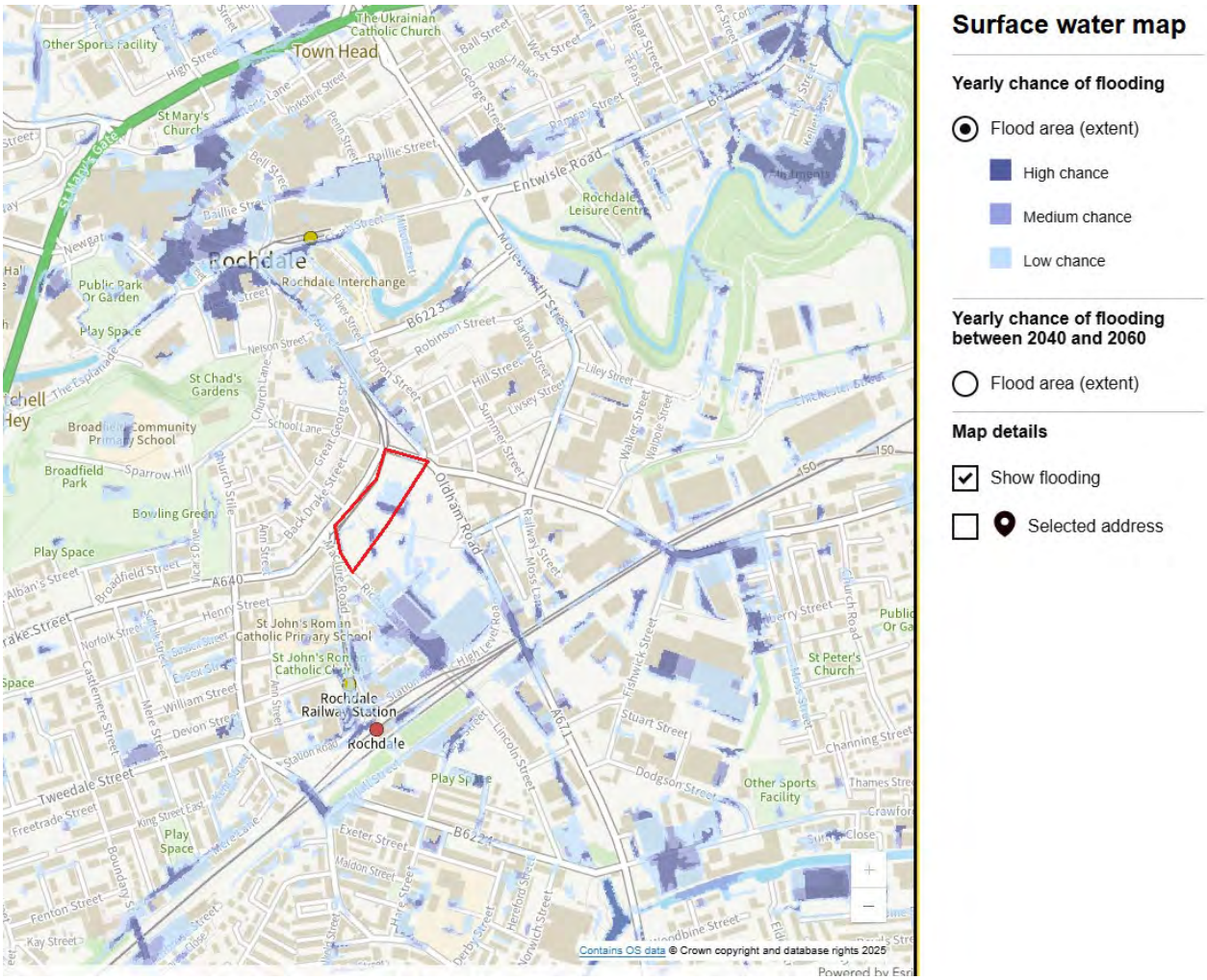

Figure 4. EA - Surface Water Flooding

This can occur during intense rainfall events, when water cannot soak into the ground or enter drainage systems. Surface water flooding from on-site sources is considered in Section 5 of this report.

3.3. Groundwater Flooding

According to Rochdale Borough's Strategy for Flood Risk Management 2014- 2024 (issued March 2014) to Groundwater flooding occurs where water levels in rock and soil are high enough for the water to appear near to or above ground. It can be caused by rainfall either locally or some distance away. Whilst this is uncommon as a type of flooding, limited smaller scale flooding, often of cellars and under floors has occurred. Further work to identify areas where this is a significant source of flood risk will be undertaken by the LLFA working with other risk management agencies. An illustration of areas susceptible to groundwater flooding can be seen in figure below.

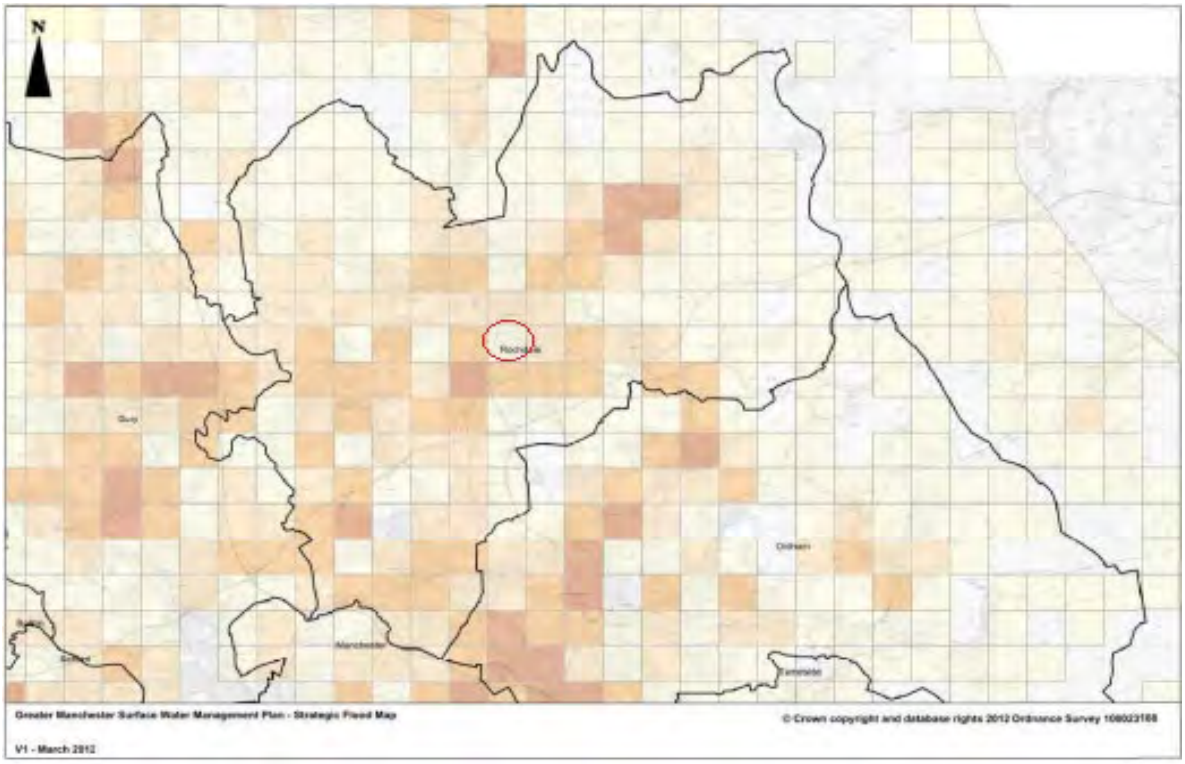

Figure 5. Local Flood Risk Management Strategy

Based on the results of Neighbourhood, Rochdale Phase 2 Ground Investigation conducted by Curtisn Ltd (July 2021), groundwater monitoring standpipes were installed within twelve of the window sample boreholes and twelve of the cable percussive boreholes.

Groundwater was located and the results can be found in Neighbourhood, Rochdale Phase 2 Ground Investigation Curtins Ref: 075882-CUR-00-XX-RP-GE-001 V02 issued July 2021.

3.4. Flooding from Anthropogenic Sources

Flooding from a reservoir and can occur from as a result of a dam failure. Reservoir flooding will cause very fast flowing water to flow down the natural water path in large quantities. Reservoir flooding is extremely rare in the UK due to very strict regulations and mandatory assessments.

Reservoirs	Flooding from reservoirs is unlikely in this area.
What a reservoir is	A reservoir is a large natural or artificial lake that is designed to collect and store water.
How we check an area's risk	We use predicted scenarios to understand the risk of flooding from reservoirs. Flooding from reservoirs is extremely unlikely. An area is considered at risk if people's lives could be threatened in the event of a dam or reservoir failure.

Figure 6. Extract from https://check-long-term-flood-risk.service.gov.uk/ground-water

4. Surface Water

In accordance with the NPPF and SFRA, consideration should be given to natural water flows at the site. The development should not adversely affect flow or increase flood risk elsewhere, including increasing run-off rates. The disposal of surface water should be dealt with in a sustainable way and climate change should also be accounted for. The site drainage strategy is discussed in Section 5.

4.1. Development Proposals

A Proposed Site Layout has been provided by Leach Rhodes Walker Architects, and it is understood that the site is to be developed to erection of an apartment block at the heart of Rochdale.

4.2. Climate Change

There is evidence to suggest that the climate is changing with sea levels predicted to continue to rise along with more frequent short-duration, high-intensity rainfall and more frequent periods of long-duration rainfall. The NPPF recommends that the effects of climate change be accounted for in DS, with consideration of the EA flood maps and local authority SFRA.

Increased rainfall or higher intensity short-duration rainfall may increase as a result of climate change. The Department for Environment Food & Rural Affairs have developed an interactive map and requires all new development to allow for a 45% increase in rainfall in the 1 in 100year event to allow for climate change for the Irwell Management Catchment peak rainfall allowances.

A 45% increase for the 1 in 100 year event is therefore being allowed for within the new surface water drainage design to take account of climate change. Climate change may also lead to variations in groundwater level which will also be considered during the drainage design.

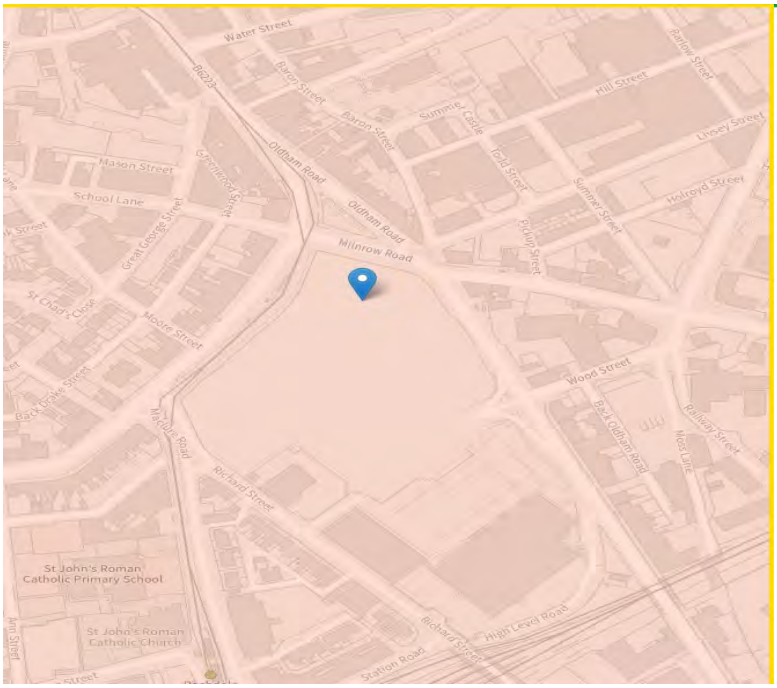

Irwell Management Catchment peak rainfall allowances

3.3% annual exceedance rainfall event

Epoch

	Central allowance	Upper end allowance
2050s	25%	35%
2070s	30%	40%

1% annual exceedance rainfall event

Epoch

	Central allowance	Upper end allowance
2050s	25%	40%
2070s	30%	45%

*Use '2050s' for development with a lifetime up 2060 and use the 2070s epoch for development with a lifetime between 2061 and 2125.

Figure 9. Climate Change Allowance Interactive Map

4.3. Sustainable Drainage Systems (SuDS)

SUDS are a desirable way to manage surface water disposal within new developments and SUDS methods for surface water drainage management are discussed further within the SUDS Manual.

The types of benefits that can be achieved by SUDS will be dependent on the site, but fit broadly into four categories: water quantity, water quality, amenity and biodiversity. These are also referred to as the four pillars of SUDS design (Figure 8):

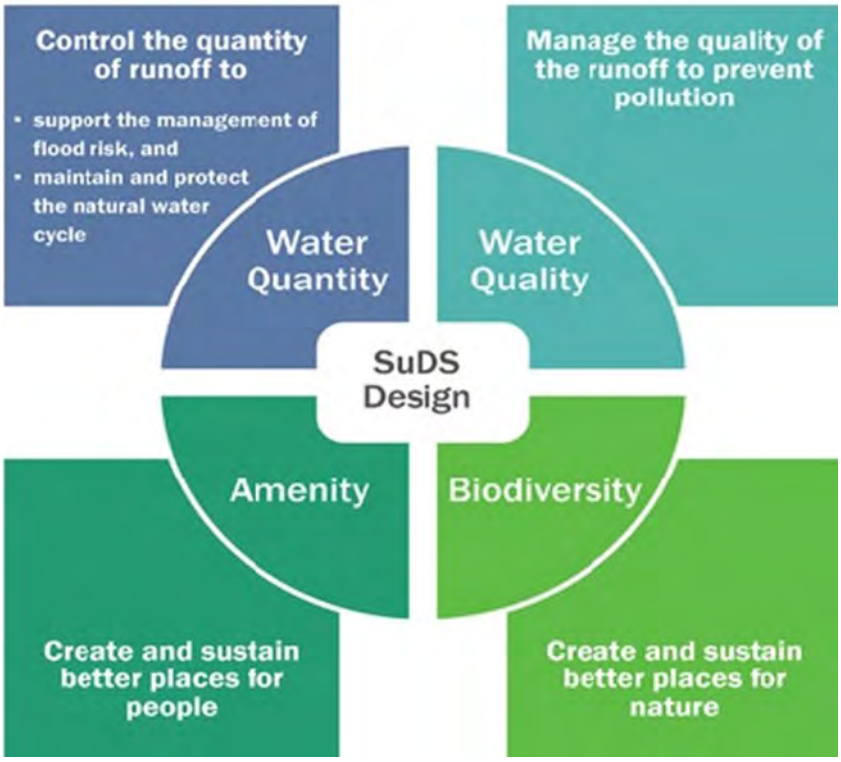

Figure 10. Four Pillars of SuDS

The proposed development will address the above 4 pillars of SuDS design criteria with the inclusion of a range of sustainable features through a comprehensive treatment train.

- **Water Quantity**: the quantity of run-off from the site will be increased as the impermeable area is increased, as set out in more detail in the Drainage Strategy in Section 5, whilst taking account of likely increases in future rainfall due to climate change.
- **Water Quality**: the quality of run-off from the site is improved by the inclusion of attenuation tank at a restricted discharge rate. The flows arising from the building roof will initially be treated via a network of pipes. All flows will be collated within the site prior to discharge restricted into United Utilities Combined Sewer Network.
- **Biodiversity** will be addressed by the green areas and vegetation areas around the site, as well as by the inclusion of a significant planting regime creating a better environment for nature to thrive.
- **Amenity** is provided through the proposed green areas, which presents the opportunity to create visually attractive areas within the proposed site which have the ability to connect people to water. Such features have been shown to improve the well-being of people that live within the proposed development.

5. Drainage Strategy

It is proposed to erect of an apartment block at the centre of Rochdale provided in Appendix A.

5.1. Proposed Foul Water Network

It is proposed to install a new gravity system to the development discharging to a combined manhole within the site prior discharging. The foul network discharging into a United Utilities Asset.

Drainage Strategy drawings can be found in Appendix C.

5.2. Proposed Surface Water Network

In following the standard hierarchy of drainage solutions, consideration should firstly be given to the discharge of surface water runoff by sustainable methods such as infiltration. A review of the available geological information for the surrounding area indicates potential groundwater contamination; therefore, infiltration is not recommended. Discharge to a watercourse has been also eliminated as no watercourse is close to the site and the intension is for the proposed surface water flows arising from the roofs of the buildings are to be discharge with a restricted flow into a manhole within the site before discharging into the combined UU Sewer Network.

Based on previous experience, any developers seeking to develop should be aiming to achieve as close to Greenfield runoff rates as possible.

Previous discussion have come to an agreement with the overall development discharge rate to 26 l/s. it is proposed that the Phase 1 to discharge at the resticted flow of 5 l/s.

Flows arising from the proposed development Phase 1 will be restricted to 5.0 l/s + 45%CC event.

The site drainage network will be designed in accordance with current best practice to have sufficient capacity not to flood both during the critical 1 in 30-year storm (plus 40% allowance for climate change) and 1 in 100-year storm event (plus 45% allowance for climate change). In this way the risk of off-site flooding, which could result in damage to other buildings and essential services, will be minimised and the risk of flooding elsewhere should not be increased as a result of the development proposals.

A Hydrobrake flow control devices which control the rate of discharge into the dedicated surface water sewer to the proposed discharge rate.

Both proposed foul and surface water networks come together within the site to a combined network.

Causeway Flow output for the Critical Storm is enclosed in Appendix F.

6. Conclusions & Recommendations

6.1. Conclusions

This Drainage Strategy Report follows guidance set out in the NPPF and the 'Planning Practice Guidance – Flood Risk and Coastal Change' and follows Environment Agency Guidance Note 1.

A review of the EA Indicative Flood Mapping and other relevant data indicates that the site is located within a tidally defined Flood Zone 1, therefore no further actions are required.

There are no recorded historical flood events.

Surface water run-off produced by the proposed development is to discharge with a restricted flow into the Combined United Utilities Sewer Network.

Flows arising from the proposed development will be restricted to 5.0 l/s + 45%CC event.

7. Maintenance Plan

The Drainage network has been designed with minimal maintenance in mind. The maintenance is generally of a 'common sense' approach and is to comprise:

- Regular day to day care: - litter collection, grass cutting and checking the inlets and outlets where water enters or leaves a drainage feature.
- Occasional tasks: - managing vegetation in wet areas and removing any silt that builds up in the drainage features.
- Remedial work: - repairing damage when, and where, necessary.

Specific recommendations for each feature are provided in the following sections and should be referred to in the first instance if there are any issues. Please contact Booth King Partnership Ltd. if any further advice is required.

During the works the Contractor, subject to agreement from their client, will ensure that all drains on which the proposed drainage works rely will be jetted out and made good as required to ensure correct operation.

Maintenance Activity	Required Action	Frequency
Inspection	Inspect for sediment and debris in pre-treatment component such as gullies, sump units and catch pits.	Monthly for the first year and on a 6-monthly basis thereafter.
Gutters	Clear gutters and any leaf guards.	On a 6-monthly basis or as required following inspection regime.
Sump Units	Remove all obstructions and debris from all sump units (gullies, channels and catch pits).	On a 6-monthly basis or as required following inspection regime.
Pipe Work	Inspect all pipework for all silt accumulation and high pressure jet any pipe work which has silt accumulation. Care is to be taken that any silts within the pipework are not flushed using chamber bungs.	On a 6-monthly basis or as required following inspection regime.
Manholes	Covers should be lifted and inspected for litter and debris to ensure that the runs are free flowing.	On a 6-monthly basis or as required following inspection regime.
Flow Control	Check flow control manhole to ensure emptying is occurring. Little to no water should be present after consecutive days of dry weather). Check function of the emergency drain down. Check for build-up of debris and silt. Clear and remove as necessary.	6 monthly basis. After extreme events.
Attenuation Tank	Ensure that ventilation pipework is free of obstruction.	6 monthly basis. After extreme events

	If jetting through the tank is required, this must be done following the jetting and clearance of upstream sumps	

8. References

1.	C753. The SuDS Manual. CIRIA. 2015.
2.	Planning Practice Guidance. http://planningguidance.planningportal.gov.uk/blog/guidance/flood-risk-and-coastal-change/
3.	National Planning Policy Framework. March 2012.
4.	Environment Agency Indicative Flood Mapping
5.	Topographical survey.
6.	BURY ROCHDALE AND OLDHAM STRATEGIC FLOOD RISK ASSESSMENT VOLUME I – SFRA User Guide. Final report December 2009
7.	BURY ROCHDALE AND OLDHAM STRATEGIC FLOOD RISK ASSESSMENT VOLUME III – Level 2 SFRA. Final Report November 2009
8.	Rochdale Borough's Strategy for Flood Risk Management 2014- 2024. March 2014
9.	Level 1 Strategic Flood Risk Assessment for Greater Manchester – Bolton MBC Sites Assessment Final Report February 2019
10.	Oldham Council Hybrid SFRA Volume I: User Guide Final January 2010
11.	Level 1 Strategic Flood Risk Assessment for Greater Manchester - Update Final Report March 2019
12.	Neighbourhood, Rochdale Phase 2 Ground Investigation Curtins Ref: 075882-CUR-00-XX-RP-GE-001 Revision: V02 Issue Date: 23 July 2021
13.	Neighbourhood, Rochdale Phase 1 Preliminary Risk Assessment Curtins Ref: 075882-CUR-00-XX-RP-GE-001 Revision: V01 Issue Date: 07 October 2020
14.	Enabling Works, Neighbourhood, Rochdale Flood Risk Assessment and Drainage Strategy Curtins Ref: (075882) NHRH-CUR-00-XX-RP-C-92001 Revision: V01 Issue Date: 09 July 2021
15.	https://environment.data.gov.uk/hydrology/climate-change-allowances/rainfall
16.	Manchester City, Salford City and Trafford Council Level 2 Hybrid SFRA LEVEL 2 SFRA Final March 2011

APPENDIX A

LOCATION PLAN – PHASE 1 ARCHITECT'S PROPOSED DEVELOPMENT

APPENDIX B

EXISTING TOPOGRAPHICAL SURVEY – UNITED UTILITIES ASSET MAP

©Survey & Engineering Projects Ltd. 2019
Reproduction in whole or in part by any means is prohibited without the prior permission of Survey & Engineering Projects Ltd.
T: (01457) 729033 F: (01457) 720334 W: www.sepsurvey.com E: info@sepsurvey.com

N

PLAN GRID NORTH

File name: 519388-2df-Rochdale-Rev'C'.dwg

LEGEND

AV	AIR VALVE	LBY	LIFEBUOY
BB	BELGIAN BEACON	MH	MANHOLE
BOL	BOLLARD	MKR	MARKER
BS	BUS STOP	MP	MILE POST
BH	BH	MP	MOORING POINT
BM	BENCH MARK	MW	MONITORING WELL
BT	BT PILLAR	OP	OUTFALL PIPE
BT	BT INSPECTION COVER	OP	OUTFALL PIPE
CCTV	CCTV CAMERA POST	PB	PUSH BUTTON BOX
CP	CAP	PN	PICON
COM	COMMUNICATIONS COVER	PP	POSTAL PUMP
CST	CAR CHARGING STATION	PT	POINT
DC	DRAINAGE CHANNEL	RE	RODDING EYE
DI	DRAINAGE CHANNEL	RS	ROAD SIGN
DP	DOWN PIPE	RS	ROAD SIGN
DP	DOWN PIPE	RTW	RETAINING WALL
EC	EC	SDP	SURFACE DRAIN PIPE
EIC	ELECT INSPECTION COVER	SMP	SAPLING
EL	EAVES LEVEL	SP	SIGN POST
ELB	ELECTRIC BOX	SV	STOP VALVE (LEVEL)
ER	EARTH ROD	SV	STOP VALVE
FC	FINISHED CURB LEVEL	TCB	TELEPHONE CALL BOX
FL	FINISHED FLOOR LEVEL	TCB	TCB
FP	FLAG POLE	TL	TRAFFIC LIGHT
FP	FLAG POLE	TLB	TRAFFIC LIGHT BOX
G	GULLY	TP	TELEGRAPH POLE
GLT	GATE POST LIGHT	TP	TELEGRAPH POLE
GP	GATE POST	VP	VENT PIPE
GST	GAS TAP	WC	WATER CUTTER
GV	GAS VALVE	WO	WASH OUT
IC	INSPECTION COVER	WST	WATER STOP TAP
L	INVERT LEVEL	WT	WATER TANK (LEVEL)
LAD	LADDER (LEVEL)	VEG	TREE (GIRTH 250cm)
LD	LAND DRAIN	VEG	TREE MULTI-GIRTH
LP	LAMP POST		
PAL	PALISADE		BATTER (LEVEL)
W/W	WIRE MESH		BATTER (SURFACE)
C/W	CHAIN WIRE		KERB
C/P	CHAIN PARK		EDGE
P/W	POST AND WIRE		SURFACE CHANGE
P/R	POST AND RAIL		RAIL
W/R	WOOD RAIL		BOTTOM BANK
C/B	CLOSE BOARDED		BUILDING
TOP	TOP OF BANK		OVER HEAD CANOPY
(TOP)	TOP OF FEATURE		OVER HEAD ELECTRICAL
(EDGE)	EDGE		OVER HEAD TELECOM
SP	SPOT		
MH	MANHOLE		HEDGE
	BATTER		

NOTES:

All levels relate to O.S (Newlyn) Datum, Established using network RTK.
Survey plotted on a plane local grid, orientated to National Grid.

SURVEY STATIONS			
Name	Easting	Northing	Height
AL1	390033.022	412914.147	139.877
AL2	389944.520	412861.286	139.740
AL3	389864.620	412862.286	139.740
AL4	389983.046	412878.685	139.808
AL5	390000.064	412878.685	139.808
SEP2	390108.084	412862.270	139.347
SEP3	390058.812	412953.579	139.703
SEP4	390025.575	412953.579	139.703
SEP5	390009.575	412985.100	137.826
SEP6	389942.988	413079.242	135.035
SEP7	389942.988	413079.242	135.035
SEP8	389838.883	413001.648	139.863
SEP9	389838.286	412963.788	140.168
SEP10	389838.286	412963.788	140.168
SEP10	389839.461	412945.813	139.808
SEP10A	389857.010	412868.125	139.996
SEP11	390016.588	412791.794	139.335
SEP11	390016.588	412791.794	139.335
SEP12	390055.162	412764.270	140.145
SEP13	390069.162	412779.154	140.240

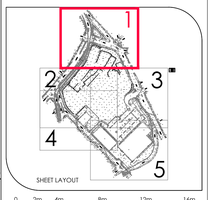

SHEET LAYOUT

0 2m 4m 8m 12m 16m

SCALE BAR

REV	DATE	DESCRIPTION
C	07/24	Site cleared re-surveyed within Harding fence
A	04/21	Additional manholes added from utility survey results.

SURVEY & ENGINEERING PROJECTS

Client
Willmott Dixon Construction Limited
Hollinwood Busines Centre
Albert Square, Albert Mill
Hollinwood
Oldham
OL8 3QL

Project Title
Topographical Survey of Land at:
Richard Street, Drake Street & Oldham Road
Rochdale
O11 1DU

Surveyed	Drawn	Checked
C Taylor	R Webb	R Critchley

Scale	Date	Drawing Ref.	No.	Size	Rev
1:200	Oct 19	519388-2df	1	A0	A

©Survey & Engineering Projects Ltd. 2019
Reproduction in whole or in part by any means is prohibited without the prior permission of Survey & Engineering Projects Ltd.
T: (0161) 728633 F: (0161) 7202344 W: www.sepsurvey.com E: info@sepsurvey.com

N

PLAN GRID NORTH

File name: 1193B8-2df-Rochdale-Rev'C'.dwg

LEGEND

AV	AIR VALVE	LBY	LIFEBUOY
BB	BELGIAN BEACON	MH	MANHOLE
BOL	BOLLARD	MKR	MARKER
BS	BUS STOP CLE	MP	MILE POST
BM	BM	MP	MOORING POINT
BM	BENCH MARK	MW	MONITORING WELL
BT	BT PILLAR	OP	OUTFALL PIPE
BT	BT INSPECTION COVER	OP	OUTFALL POP
CCTV	CCTV CAMERA	PB	PUSH BUTTON BOX
CCTV	CCTV CAMERA POST	PIC	PICCOL
CO	CLEAN OUT	PP	PUMPING PUMP
COM	COMMUNICATIONS COVER	PT	POINT
CST	CAR CHARGING STATION	RE	RODDING EYE
DC	DRAINAGE CHANNEL	RL	ROAD LEVEL
DI	DRAINAGE CHANNEL	RS	ROAD SIGN
DP	DOWN PIPE	RTW	RETAINING WALL
DP	DOWN PIPE	SAP	SANITARY PIPE
EIC	ELEC INSPECTION COVER	SAP	SAPLING
EL	EAVES LEVEL	SP	SIGN POST
EL	ELEC LEVEL	SV	STOP VALVE LEVEL
ER	EARTH ROD	SV	STOP VALVE
FC	FIBRE OPTIC CABLE	TB	TELEPHONE BOX
FL	FINISHED FLOOR LEVEL	TCB	TELEPHONE CALL BOX
FP	FLAG POLE	TL	TRAFFIC LIGHT
FP	FLAG POLE	TL	TRAFFIC LIGHT
G	GULLY	TLB	TRAFFIC LIGHT BOX
GLT	GAS LIFT LIGHT	TP	TELEPHONE POLE
GP	GATE POST	TP	TELEPHONY POLE
GST	GAS TAP	VP	VENT PIPE
GV	GAS VALVE	WC	WATER CUTTER
IC	INSPECTION COVER	WO	WASH OUT
L	INVERT LEVEL	WST	WATER STOP TAP
LAD	LADDER - ALL ROUTES	WT	WATER TANK - ROUGH
LAD	LADDER	ULM	TREE DRIPS 20m+
LD	LAND DRAIN	WO	TREE MULTI-DRIPS
LP	LAMP POST		
PAL	PALISADE		BATTER LEVEL
W/M	WIRE MESH		BATTER TO PLANE
C/W	CHAIN WIRE		KERB
C/P	CHAIN PARK		EDGE
P/W	POST AND WIRE		SURFACE CHANGE
P/R	POST AND RAIL		RAIL
U/B	IRON BAR		BOTTOM BANK
C/B	CLOSE BOARDED		BUILDING
(HA)	TOP OF FEATURE		OVER HEAD CANOPY
(HA.R)	TOP OF FEATURE		OVER HEAD ELECTRICAL
(R.HA)	GATE		OVER HEAD TELECOM
BOL	BOLLARD		
	MANHOLE		HEDGE
	BATTER		

NOTES:

All levels relate to O.S (Newlyn) Datum, Established using network RTK.
Survey pitched on a plane local grid, orientated to National Grid.

SURVEY STATIONS			
Name	Easting	Northing	Height
AL1	390033.022	412914.147	139.877
AL2	390	412	139.740
AL3	389964.620	412862.284	139.740
AL4	389960.046	412878.685	139.808
SEP1	390	412	139.847
SEP2	390108.084	412862.270	139.347
SEP3	390058.812	412953.579	139.703
SEP4	390	412	139.703
SEP5	390009.575	413065.100	137.628
SEP6	389942.968	413079.242	135.035
SEP7	389	413	136.861
SEP7	389906.883	413001.648	139.861
SEP8	389836.286	412963.788	140.148
SEP9	389	412	139.808
SEP10	389839.461	412843.813	139.808
SEP10A	389857.010	412868.125	139.996
SEP10C	389	412	139.996
SEP11	390048.588	412781.784	139.330
SEP12	390050.162	412764.270	140.145
SEP13	390069.182	412779.134	140.240

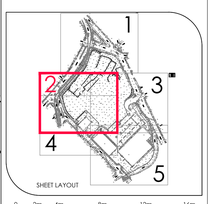

0 2m 4m 8m 12m 16m
SCALE BAR

REV	DATE	DESCRIPTION
C	07/24	Site cleared re-surveyed within Harding fence
A	04/21	Additional manholes added from utility survey results.

SURVEY & ENGINEERING PROJECTS

Client
Willmott Dixon Construction Limited
Hollinwood Busines Centre
Albert Square, Albert Mill
Hollinwood
Oldham
OL8 3QL

Project Title
Topographical Survey of Land at:
Richard Street, Drake Street & Oldham Road
Rochdale
O11 1DU

Surveyed	Drawn	Checked
C Taylor	R Webb	R Critchley

Scale	Date	Drawing Ref.	No.	Size	Rev
1:200	Oct 19	S19388-2df	2	A0	A

© Survey & Engineering Projects Ltd. 2019
Reproduction in whole or in part by any means is prohibited without the prior permission of Survey & Engineering Projects Ltd.
T. (01485) 729930 F. (01470) 732364 W. www.sepsurvey.com E. info@sepsurvey.com

N

PLAN GRID NORTH

File name: 519388-2df-Rochdale-Rev'C'.dwg

LEGEND

AV	AIR VALVE	LBY	LIFEBUOY
BB	BELGIAN BEACON	MH	MANHOLE
BOL	BOLLARD	MKR	MARKER
BS	BUS STOP POLE	MP	MILE POST
BW	BIN	MP	MOORING POINT
BM	BENCH MARK	MW	MONITORING WELL
CB	CATCH PIT	OP	OUTFALL PIPE
ICV	ICV INSPECTION COVER	OP	OUTFALL POST
CP	CAR PARKING	PB	PUSH BUTTON FUSE BOX
CCTV	CCTV CAMERA POST	PN	PICION
CO	CLEAN OUT	PP	PICION, PUMP
COM	COMMUNICATIONS COVER	PT	POST
CST	CAR CHARGING STATION	RE	RODDING EYE
DC	DRAIN COVER	RG	ROAD GULLY
DI	DRAINAGE CHANNEL	RS	ROAD SIGN
DP	DOWN PIPE	RTW	RETAINING WALL
DS	DOWN SPOUT	SDP	SURFACE DRAIN PIPE
EC	ELEC INSPECTION COVER	SAP	SAPLING
EL	EAVES LEVEL	SP	SIGN POST
EP	ELEC POWER	SL	SOFFIT LEVEL
ER	EARTH ROD	TV	STOP VALVE
FH	FIRE HYDRANT POLE	TC	TELEPHONE CALL BOX
FL	FINISHED FLOOR LEVEL	TCB	TELEPHONE CALL BOX
FP	FLAG POLE	TL	TRAFFIC LIGHT
FR	FLAG POLE	TLB	TRAFFIC LIGHT BOX
G	GULLY	TP	TELEGRAPH POLE
GLT	GATE POST LIGHT	TP	TELEPHONE POLE
GP	GATE POST	VP	VENT PIPE
GST	GAS TAP	WP	WATER METER
GV	GAS VALVE	WO	WASH OUT
IC	INSPECTION COVER	WST	WATER STOP TAP
L	WATER LEVEL	WT	WATER TANK / TOILET
LC	LAMP CHANGE	CL(A)	TREE (DRIP) (DIA.)
LAD	LADDER	MG	TREE MULTI-DRIPS
LD	LAND DRAIN		
LP	LAMP POST		BATTER
PAL	PALISADE		BATTER / SLOPE
R/W	WIRE MESH		FENCE
E/W	ESTATE WALL		KERB
E/P	EDGE PAVING		SURFACE CHANGE
P/W	POST AND WIRE		MAST
W/R	WOOD RAIL		BOTTOM BANK
I/R	IRON RAIL		TOP BANK
C/B	CLOSE BOARDED		BUILDING
W/B	WALL BRACKET		CANOPY
(TM.PK)	TOP OF FEATURE		OVER HEAD ELECTRICAL
(G.PK)	GATE		OVER HEAD TELECOM
SP	SPOT HEIGHT		
MH	MANHOLE		HEDGE

NOTES:

All levels relate to O.S (Newlyn) Datum, Established using network RTK.
Survey plotted on a plane local grid, orientated to National Grid.

SURVEY STATIONS			
Name	Easting	Northing	Height
AL1	390033.022	412914.147	139.877
AL2	390033.022	412914.147	139.877
AL3	389964.620	412862.266	139.740
AL4	389960.046	412878.685	139.808
SEP1	390106.064	412862.270	139.347
SEP2	390106.064	412862.270	139.347
SEP3	390056.812	412953.579	139.703
SEP4	390056.812	412953.579	139.703
SEP5	390005.575	413065.100	137.826
SEP6	389942.968	413079.242	135.135
SEP6A	389942.968	413079.242	135.135
SEP7	389906.883	413031.646	139.863
SEP8	389836.286	412963.786	140.148
SEP9	389836.286	412963.786	140.148
SEP10	389839.461	412945.813	139.808
SEP10A	389857.010	412868.125	139.996
SEP11	390047.000	412793.794	139.330
SEP11	390047.000	412793.794	139.330
SEP12	390050.162	412764.270	140.145
SEP13	390069.182	412779.154	140.240

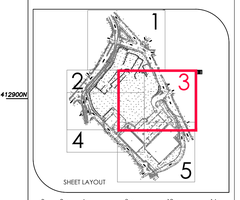

SHEET LAYOUT

0 2m 4m 8m 12m 16m
SCALE BAR

REV	DATE	DESCRIPTION
C	07/24	Site cleared re-surveyed within Harding fence
A	04/21	Additional manholes added from utility survey results.

SURVEY & ENGINEERING PROJECTS

Client
Willmott Dixon Construction Limited
Hollinwood Busines Centre
Albert Square, Albert Mill
Hollinwood
Oldham
OL8 3QL

Project Title
Topographical Survey of Land at:
Richard Street, Drake Street & Oldham Road
Rochdale
O11 1DU

Surveyed	Drawn	Checked
C Taylor	R Webb	R Critchley

Scale	Date	Drawing Ref.	No.	Size	Rev
1:200	Oct 19	S19388-2df	3	A0	A

©Survey & Engineering Projects Ltd. 2019
Reproduction in whole or in part by any means is prohibited without the prior permission of Survey & Engineering Projects Ltd.
T: (0161) 728633 F: (0161) 720364 W: www.sepsurvey.com E: info@sepsurvey.com

N

PLAN GRID NORTH

File name: 1193B8-2df-Rochdale-Rev0.dwg

LEGEND

AV	AIR VALVE	LBY	LIFEBUOY
BB	BELGIAN BEACON	MH	MANHOLE
BOL	BOLLARD	MKR	MARKER
BS	BUS STOP CLE	MP	MOORING PILE
BW	BIN	MP	MOORING POINT
BM	BENCH MARK	MW	MONITORING WELL
BH	BOREHOLE	OP	OUTFALL PIPE
BT	BT INSPECTION COVER	OP	OUTFALL POST
CCTV	CCTV CAMERA	PB	PUSH BUTTON BOX
CCTV	CCTV CAMERA POST	PN	PICION
CH	CHAINAGE	PP	PIPE, PUMP
COM	COMMUNICATIONS COVER	PT	POSTS
CST	CAR CHARGING STATION	RE	RODDING EYE
DC	DRAINAGE CHANNEL	RL	ROAD LIGHT
DO	DRAINAGE CHANNEL	RS	ROAD SIGN
DP	DOWN PIPE	RTW	RETAINING WALL
DP	DRAIN PIPE	SAP	SANITARY PIPE
EC	ELEC INSPECTION COVER	SAP	SAPLING
EL	EAVES LEVEL	SP	SIGN POST
EL	ELEVATION LEVEL	SV	STOP VALVE
ER	EARTH ROD	TV	TOUP VALVE
FC	FIBRE OPTIC CABLE	TCB	TELEPHONE CALL BOX
FL	FINISHED FLOOR LEVEL	TCB	TELEPHONE CALL BOX
FP	FLAG POLE	TL	TRAFFIC LIGHT
FP	FLAG POLE	TL	TRAFFIC LIGHT
G	GULLY	TLB	TRAFFIC LIGHT BOX
GLT	GATE LIGHT	TP	TELEGRAPH POLE
GP	GATE POST	TP	TELEGRAPH POLE
GST	GAS TAP	VP	VENT PIPE
GT	GAS TAP	WC	WATER METER
IC	INSPECTION COVER	WO	WASH OUT
IL	INVERT LEVEL	WST	WATER STOP TAP
LB	LETTER BOX	WT	WATER TANK OUT
LAD	LADDER	VEG	TREE DRIPS (DIA.)
LD	LAND DRAIN	WO	TREE MULTI-DRIPS
LP	LAMP POST		

PAL	PALISADE		BATTER LEVELS
W/W	WIRE MESH		KERB
C/W	CHAIN LINK		EDGE
C/W	CHAIN LINK		SURFACE CHANGE
P/W	POST AND WIRE		NAIL
P/R	POST AND RAIL		BOTTOM BANK
U/S	IRON RAIL		BOTTOM BANK
C/B	CLOSE BOARDED		BUILDING
(HE)	TOP OF HEDGE		OVER HEAD CANOPY
(HE.B)	TOP OF FEATURE		OVER HEAD ELECTRICAL
(EHE)	GATE		OVER HEAD TELECOM
BH	BOREHOLE		
	BATTER		HEDGE

NOTES:

All levels relate to O.S (Newlyn) Datum, Established using network RTK.
Survey plotted on a plane local grid, orientated to National Grid.

SURVEY STATIONS			
Name	Easting	Northing	Height
AL1	390033.022	412914.147	139.872
AL2	390	412	139.740
AL3	389844.620	412862.288	139.740
AL4	389860.046	412878.685	139.808
SEP1	390	412	139.847
SEP2	390108.084	412862.270	139.847
SEP3	390058.812	412953.579	139.703
SEP4	390	412	137.826
SEP5	390029.575	413065.100	137.826
SEP6	389942.968	413079.242	138.039
SEP7	389	413	138.039
SEP7	389846.853	413071.648	139.863
SEP8	389836.286	412963.788	140.168
SEP9	389	412	139.839
SEP10	389839.467	412843.813	139.839
SEP10A	389857.010	412868.125	139.996
SEP11	390	412	139.339
SEP11	390049.588	412791.784	139.339
SEP12	390055.182	412764.270	140.145
SEP13	390069.182	412779.154	140.240

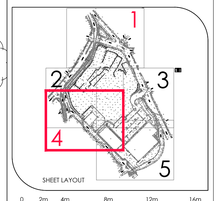

SHEET LAYOUT

0 2m 4m 8m 12m 16m

SCALE BAR

REV	DATE	DESCRIPTION
C	07/24	Site cleared re-surveyed within Harding fence
A	04/21	Additional manholes added from utility survey results.

SURVEY & ENGINEERING PROJECTS

Client
Willmott Dixon Construction Limited
Hollinwood Busines Centre
Albert Square, Albert Mill
Hollinwood
Oldham
OL8 3QL

Project Title
Topographical Survey of Land at:
Richard Street, Drake Street & Oldham Road
Rochdale
O11 1DU

Surveyed	Drawn	Checked
C Taylor	R Webb	R Critchley

Scale	Date	Drawing Ref.	No.	Size	Rev
1:200	Oct 19	S19388-2df	4	A0	A

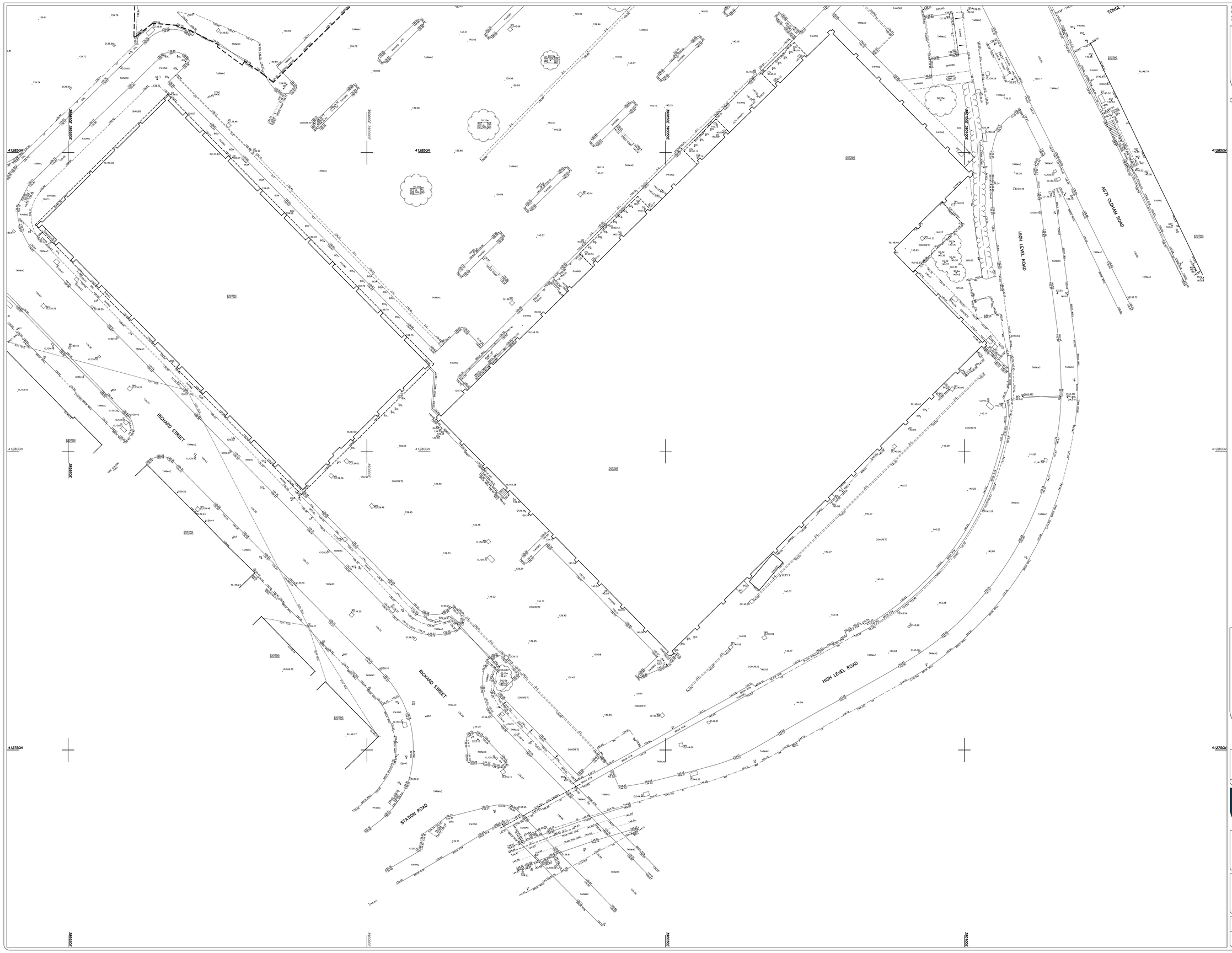

© Survey & Engineering Projects Ltd. 2019
Reproduction in whole or in part by any means is prohibited without the prior permission of Survey & Engineering Projects Ltd.
T: (0161) 728633 F: (0161) 7233041 W: www.sepsurvey.com E: info@sepsurvey.com

N

PLAN GRID NORTH

File name: 1:19388-2df-Rochdale-Rev'C'.dwg

LEGEND

AV	AIR VALVE	LBY	LITTERLOUT
BB	BELGIAN BEACON	MH	MANHOLE
BOL	BOLLARD	MKR	MARKER
BS	BUS STOP POLE	MP	METER PIPE
BW	BIN WOOL	MP	MOORING POINT
BM	BENCH MARK	MW	MONITORING WELL
CB	CATCH PIT	NP	NOTICE PIPE
IC	IC INSPECTION COVER	OT	OUTFALL TUBE
CCTV	CCTV CAMERA	PB	PUSH BUTTON BOX
CCTV	CCTV CAMERA POST	PN	PYCON
CH	CHAMBER	PP	PUBLIC PUMP
COM	COMMUNICATIONS COVER	PT	POST
CST	CAR CHARGING STATION	RE	RODDING EYE
DC	DRAINAGE CHANNEL	RL	ROAD LIGHT
DI	DRAINAGE CHANNEL	RS	ROAD SIGN
DP	DOWN PIPE	RTW	RETAINING WALL
DP	DRAIN PIPE	SCP	SCOUR PROT. PIPE
EC	ELEC INSPECTION COVER	SAP	SAPLING
EL	EAVES LEVEL	SP	SIGN POST
ELB	ELECTRIC BOX	SV	STOP VALVE LEVEL
ER	EARTH ROD	TV	STOP VALVE
FB	FIBRE OPTIC POLE	TB	TELEPHONE CALL BOX
FL	FINISHED FLOOR LEVEL	TCB	TELEPHONE CALL BOX
FP	FLAG POLE	TL	TRAFFIC LIGHT
FP	FUEL PIPE	TLB	TRAFFIC LIGHT BOX
G	GULLY	TP	TELEGRAPH POLE
GLT	GARDEN LIGHT	TP	TELEGRAPH POLE
GP	GATE POST	VP	VENT PIPE
GST	GAS TAP	WC	WATER CUTTER
GV	GAS VALVE	WO	WASH OUT
IC	INSPECTION COVER	WST	WATER STOP TAP
L	INVERT LEVEL	WT	WATER TANK/TOILET
LB	LAMP BOLLARD	OLW	TREE DIRTY OIL-L
LSD	LASER DOWN	MO	TREE MULTI-DIRTY OIL
LT	LAMP TOWER		
LP	LAMP POST		BATTER
PAL	PALISADE		BRICK PILLAR/E
W/M	WIRE MESH		KERB
C/W	CONC WALL		EDGE
C/P	CONC PANEL		SURFACE CHANGE
P/W	POST AND WIRE		NAIL
W/R	WOOD RAIL		BOTTOM BANK
I/R	IRON RAIL		BOTTOM BANK
C/B	CLOSE BOARDED		BUILDING
C/L	CHAIN LINK		OVER HEAD CANOPY
OHE (H)	TOP OF FEATURE		OVER HEAD ELECTRICAL
BOL	GATE		OVER HEAD TELECOM
BH	BOREHOLE		
	BORCHOLE		HEDGE
	BATTER		

NOTES:

All levels relate to O.S (Newlyn) Datum, Established using network RTK.
Survey pitched on a plane local grid, orientated to National Grid.

SURVEY STATIONS			
Name	Easting	Northing	Height
AL1	390033.033	412914.147	139.870
AL2	390	412	139.870
AL3	389864.620	412862.284	139.740
AL4	389960.046	412878.685	139.808
SEP1	390	412	139.347
SEP2	390108.084	412862.270	139.347
SEP3	390058.812	412953.579	139.703
SEP4	390	412	139.703
SEP5	390029.575	413065.100	137.628
SEP6	389942.968	413079.242	139.339
SEP7	389	413	139.339
SEP7	389806.883	413031.648	139.863
SEP8	389838.286	412963.788	140.148
SEP9	389	412	139.808
SEP10	389839.461	412843.813	139.808
SEP10A	389857.010	412868.125	139.996
SEP11	390	412	139.339
SEP11	390016.588	412781.784	139.339
SEP12	390050.162	412764.270	140.145
SEP13	390069.182	412779.154	140.240

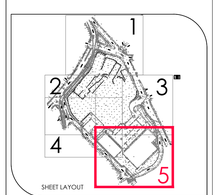

0 2m 4m 8m 12m 16m
SCALE BAR

REV	DATE	DESCRIPTION
C	07/24	Site cleared re-surveyed within Harding fence
A	04/21	Additional manholes added from utility survey results.

SURVEY & ENGINEERING PROJECTS

Client
Willmott Dixon Construction Limited
Hollinwood Busines Centre
Albert Square, Albert Mill
Hollinwood
Oldham
OL8 3QL

Project Title
Topographical Survey of Land at:
Richard Street, Drake Street & Oldham Road
Rochdale
O11 1DU

Surveyed	Drawn	Checked			
C Taylor	R Webb	R Critchley			
Scale	Date	Drawing Ref.	No.	Size	Rev
1:200	Oct 19	S19388-2df	5	A0	A

United Utilities
Water for the North West

How to contact us:

United Utilities Water Limited
Property Searches
Haweswater House
Lingley Mere Business Park
Great Sankey
Warrington
WA5 3LP

Telephone: 0370 7510101

E-mail: propertysearches@uuplc.co.uk

Curtins Consulting Ltd

51-55
Tithebarn Street,
Liverpool,
L2 2SB

FAO:

Your Ref: 075882 Neighbourhood Rochdale
Our Ref: UUPS-ORD-211023
Date: 31/10/2020

Dear Sirs

Location: Neighbourhood Rochdale

I acknowledge with thanks your request dated 26/10/2020 for information on the location of our services.

Please find enclosed plans showing the approximate position of United Utilities' apparatus known to be in the vicinity of this site.

The enclosed plans are being provided to you subject to the United Utilities terms and conditions for both the wastewater and water distribution plans which are shown attached.

If you are planning works anywhere in the North West, please read United Utilities' access statement before you start work to check how it will affect our network. http://www.unitedutilities.com/work-near-asset.aspx .

I trust the above meets with your requirements and look forward to hearing from you should you need anything further.

If you have any queries regarding this matter please contact us .

Yours Faithfully,

Karen McCormack
Property Searches Manager

United Utilities Water Limited
Registered In England & Wales No. 2366678
Registered Office Haweswater House, Lingley Mere Business Park,
Lingley Green Avenue, Great Sankey, Warrington, WA5 3LP

Water for the North West

TERMS AND CONDITIONS - WASTEWATER AND WATER DISTRIBUTION PLANS

These provisions apply to the public sewerage, water distribution and telemetry systems (including sewers which are the subject of an agreement under Section 104 of the Water Industry Act 1991 and mains installed in accordance with the agreement for the self construction of water mains) (UUWL apparatus) of United Utilities Water Limited "(UUWL)".

TERMS AND CONDITIONS:

- This Map and any information supplied with it is issued subject to the provisions contained below, to the exclusion of all others and no party relies upon any representation, warranty, collateral contract or other assurance of any person (whether party to this agreement or not) that is not set out in this agreement or the documents referred to in it.
- This Map and any information supplied with it is provided for general guidance only and no representation, undertaking or warranty as to its accuracy, completeness or being up to date is given or implied.
- In particular, the position and depth of any UUWL apparatus shown on the Map are approximate only. UUWL strongly recommends that a comprehensive survey is undertaken in addition to reviewing this Map to determine and ensure the precise location of any UUWL apparatus. The exact location, positions and depths should be obtained by excavation trial holes.
- The location and position of private drains, private sewers and service pipes to properties are not normally shown on this Map but their presence must be anticipated and accounted for and you are strongly advised to carry out your own further enquiries and investigations in order to locate the same.
- The position and depth of UUWL apparatus is subject to change and therefore this Map is issued subject to any removal or change in location of the same. The onus is entirely upon you to confirm whether any changes to the Map have been made subsequent to issue and prior to any works being carried out.
- This Map and any information shown on it or provided with it must not be relied upon in the event of any development, construction or other works (including but not limited to any excavations) in the vicinity of UUWL apparatus or for the purpose of determining the suitability of a point of connection to the sewerage or other distribution systems.
- No person or legal entity, including any company shall be relieved from any liability howsoever and whensoever arising for any damage caused to UUWL apparatus by reason of the actual position and/or depths of UUWL apparatus being different from those shown on the Map and any information supplied with it.
- If any provision contained herein is or becomes legally invalid or unenforceable, it will be taken to be severed from the remaining provisions which shall be unaffected and continue in full force and affect.
- This agreement shall be governed by English law and all parties submit to the exclusive jurisdiction of the English courts, save that nothing will prevent UUWL from bringing proceedings in any other competent jurisdiction, whether concurrently or otherwise.

United Utilities Water Limited
Registered In England & Wales No. 2366678
Registered Office Haweswater House, Lingley Mere Business Park,
Lingley Green Avenue, Great Sankey, Warrington, WA5 3LP

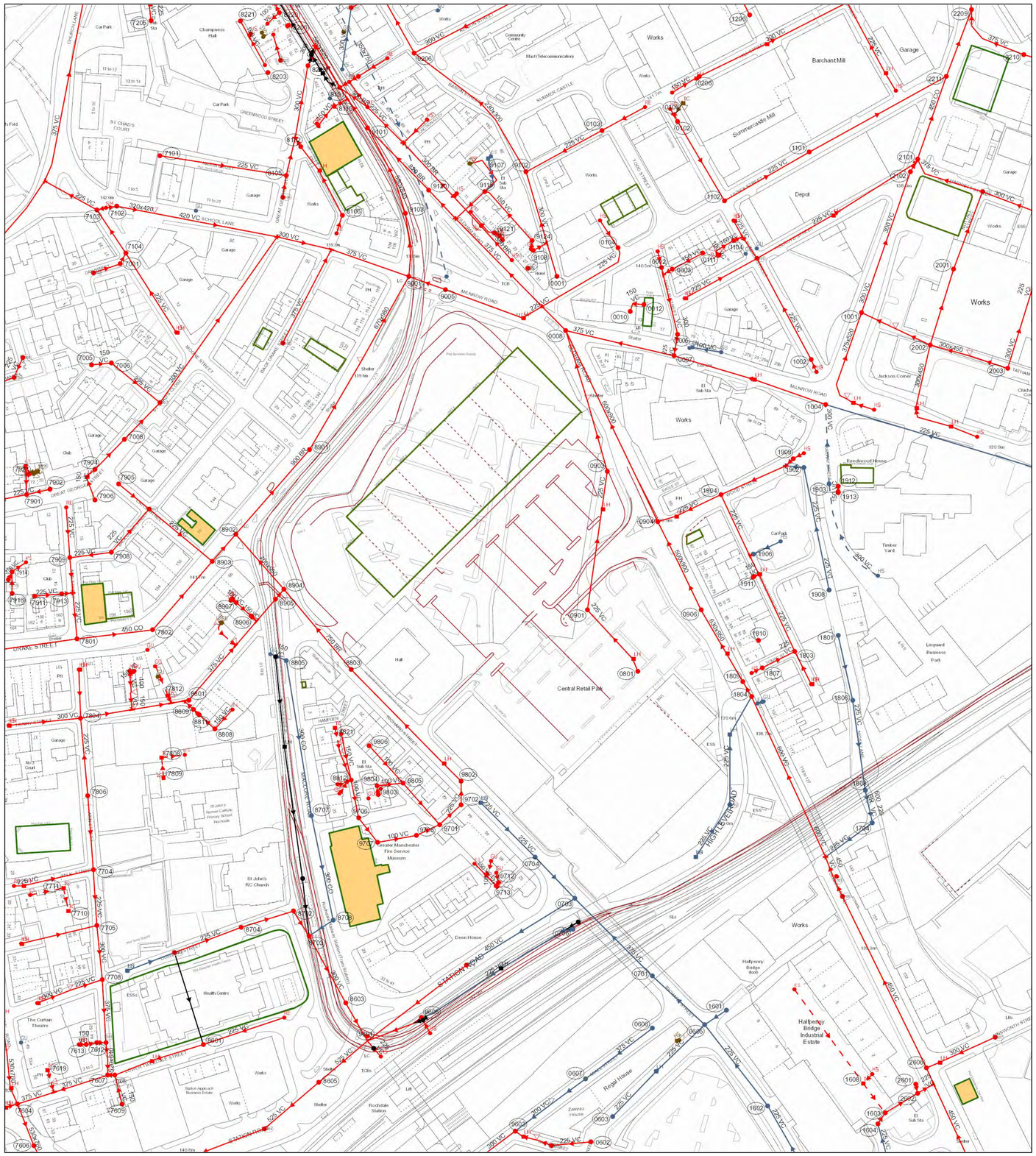

The position of the underground apparatus shown on this plan is approximate only and is given in accordance with the best information currently available. United Utilities Water will not accept liability for any loss or damage caused by the actual position being different from those shown.

Crown copyright and database rights 2017 Ordnance Survey 100022432. Unauthorised reproduction will infringe these copyrights.

Refno	Cover	Func	Invert	Size x	Size y	Shape	Matl	Length	Grad
1808	139.85	SW	137.88	500			BR	9.215544	
7911		CO	0	225			VC	14.95751	
9606	140.78	CO	138.82	300			VC	32.84396	1 in 71
9712		CO	0	100			VC	2.119205	
0901	140.08	CO	137.46	225			VC	77.78175	1 in 136
7801	143.23	CO	139.27	450			CO	42.29657	1 in 146
1102	140.76	CO	137.71	225			VC	54.20332	1 in 42
7904	143.57	CO	0	300			VC	28.3399	
8603	141.03	CO	136.89	300			VC	24.17908	1 in 110
9804		CO		100			VC	14.49812	
8225		CO		100			VC	14.86392	
8902	141.41	CO	134.28	900			BR	62.36987	1 in 120
0606	140.35	SW	138.65	375			VC	46.40043	1 in 125
0605	141.12	SW	137.95	375			VC	39.62323	1 in 209
8702	140.3	CO	137.33	300			VC	16.31468	1 in 181
8805	140.33	SW	137.9	300			CO	87.14848	1 in 236
7906	143.95	CO	142.57	150			VC	20.33151	
2003	139.68	CO	136.83	300			VC	43.9659	
8801	142.02	CO	138.52	375			VC	73.75224	1 in 29
9603	140.67	CO	137.94	300			VC	50	1 in 125
0103	141.79	CO	139.13	225			VC	47.88528	
0906	139.48	CO	134.98	630			BR	27.73085	1 in 163
9713		CO		150			VC	17.06038	
8704	140.82	CO	137.95	225			VC	30.36445	1 in 63
8115		CO		150			VC	8.472046	
7705	143.98	CO	140.01	300			VC	30.14963	1 in 27
0903	139.61	CO	136.85	225			VC	40.5216	
7908	144.04	CO	141.23	225			VC	31.89044	1 in 30
1806	141.15	SW	139.55	225			VC	50.48762	1 in 35
7612	142.28	CO	0	150			VC	5	
0006	139.72	CO	137.13	300			VC	6.082763	1 in 18
8102	135.37	CO	133.66	225			VC	5.830952	
7609	141.72	CO	140.24	150			VC	16.49242	
9702	139.51	CO	135.51	225			VC	13	1 in 76
0701	139.02	SW	137.74	375			VC	60.81118	1 in 138
8605	140.8	CO	136.31	525			VC	39.61892	
1206	138.82	CO	135.64	225			VC	67.58018	
0104	140.24	CO	137.17	225			VC	115.3102	1 in 34
1807	140.66	CO	138.97	225			VC	20.12461	1 in 101
8811		CO		150			VC	4.431383	
2606	140.63	CO	136.75	450			VC	106.0473	1 in 126
8101		CO	126.36	580			BR	26.94917	
0703	139.18	SW	137.28	450			VC	70.51476	1 in 235
1604	140.59	CO	138.42	225			VC	7.211102	1 in 15
7607	141.91	CO	137.45	375			VC	52.49762	
1908	140.76	SW	139.12	225			VC	69.42622	1 in 65
1603	140.5	CO	137.86	225			VC	21.09502	1 in 88
1903	140.58	SW	137.77	300			VC	44.04543	1 in 86
2002	139.79	CO	136.68	300			VC	43.9659	
8220		CO		100			VC	5.738782	
9103		CO	0	580			BR	51.99791	
9708		CO		100			VC	14.2161	
2002	139.79	CO	136.68	375			VC	21.0238	1 in 131
7913		CO	0	225			VC	6.293779	
9108		CO		150			VC	8.65347	
9102	139.41	CO	0	230			BR	92.0575	
0904	139.73	CO	134.63	600			BR	117.6308	
0607	140.52	SW	138.28	375			VC	23.60085	1 in 91
8220		CO		100			VC	8.924911	
0008	138.07	CO	0	375			VC	86.97701	
2211	136.87	CO	133.01	450			CO	39.56008	1 in 24
7914		CO		150			VC	9.330054	
0001	138.56	CO	135.26	300			VC	60.44005	
0608	142.01	CO	136.76	530			BR	39.35734	1 in 86
8703	140.52	CO	137.21	300			VC	42.37137	1 in 141
8106	138.55	CO	135.47	225			VC	44.57922	1 in 25
8808		CO		150			VC	11.71249	
7806	143.93	CO	141.51	225			VC	41.10961	1 in 64
7921		CO		100			VC	0.8220854	
8903		CO	0	450			CO	19.84943	
9805		CO		100			VC	30.71518	
9005	137.37	CO	133.8	225			VC	21.41906	1 in 535
1909	140.42	CO	137.94	225			VC	5.656854	
8708	140.9	SW	137.27	300			CO	16.05808	1 in 321
0602	141.39	CO	138.67	225			VC	22.09072	1 in 85
9803		CO		100			VC	4.814135	
0601	141.03	CO	138.32	225			VC	8.544003	1 in 53
8901	140.43	CO	133.74	900			BR	55.56977	1 in 150
8705	141.86	CO	138.59	225			VC	39.56008	1 in 62
2601	140.52	CO	138.04	225			VC	5.09902	1 in 24
1704	139.79	SW	0	225			VC	32.20248	
1902	140.45	SW	138.03	225			VC	10.04988	
1002	140.06	CO	138.15	225			VC	63.52952	1 in 65
9802	139.58	CO	135.03	750			BR	86.97757	1 in 300
2003	139.68	CO	137.12	300			VC	22.13594	1 in 92
8601	141.38	CO	137.82	225			VC	51.90511	
1804	139.05	CO	0	630			BR	46.04156	
9208	131.08	CO	129.22	150			VC	5.830952	
7608		CO	0	225			VC	2	
1004	140.27	CO	137.13	300			VC	88.25952	1 in 101
8105	137.2	CO	135.52	225			VC	21.58703	
7604		CO	0	530			BR	24.69818	
8707	140.37	SW	137.52	300			CO	59.20551	1 in 247
9101	132.68	CO	128.82	580			BR	27.17025	
8223	130.55	CO	126.55	300			CO	10.77159	1 in 269
7806	143.93	CO	141.51	225			VC	43.18565	1 in 40
1904	140.16	CO	137.34	225			VC	38.17115	1 in 18
7611		CO	0	530			BR	9.055386	
2209	135.42	CO	131.31	525			CO	10.04988	1 in 18
7001	142.11	CO	139.43	225			VC	6.708204	1 in 61
7915		CO		150			VC	5.017515	
7102	142.14	CO	139.19	320			VC	21.37756	
0111		CO	0	150			VC	19.23538	
9706		CO		100			VC	17.1949	
2001		CO	0	300			VC	45.88028	
1911		CO		150			VC	3.507146	
7902	144.12	CO	141.87	225			VC	13.34166	1 in 30
9806		CO		100			VC	27.93184	
0801	140.17	CO	137.98	225			VC	44.41251	1 in 87
1602	141.52	SW	139.51	225			VC	57.00877	1 in 47
9120	134.42	CO	129.78	820			BR	48.26717	1 in 51
9122		CO		100			VC	18.12347	
7007	143.03	CO	140.37	300			VC	112.6455	1 in 0.82139026
8907		CO		150			VC	11.01327	
7104	142.14	CO	139.29	225			VC	28.84441	1 in 70
9707		CO		100			VC	21.81102	
7908	144.04	CO	141.21	225			VC	23.19483	1 in 59
0706	144.07	SW	141.83	225			VC	5.233026	
7905	143.62	CO	140.91	225			VC	22.02271	1 in 27
1101	138.84	CO	136.41	225			VC	86.83318	1 in 39
2103	138.42	CO	135.19	375			VC	42.47038	1 in 109
8219		CO	0	150			VC	12.75588	
7708	143	CO	138.76	375			VC	35.05709	
7003	143.4	CO	141.72	225			VC	12.08305	1 in 93
1804	139.05	CO	135.28	630			BR	9.528218	
0603	141.23	SW	138.7	225			VC	72.13878	1 in 106
7704	144.04	CO	140.85	225			VC	31.06445	1 in 38
9001	137.63	CO	132.66	580			BR	35.24442	
7613	142.36	CO	0	150			VC	6.082763	
1801	140.82	SW	139.3	225			VC	36.87818	
9704	140.12	CO	136.97	450			VC	69.17464	1 in 150
7802	142.85	CO	138.96	450			CO	50.32892	
8812		CO		100			VC	21.32049	
8803	140.14	CO	134.72	750			BR	58.03271	
2210	136	CO	132.08	375			VC	33.91772	
9115		CO	0	820			BR	21.93171	
7904	143.57	CO	0	300			VC	23.28374	
7005	143.68	CO	141.99	150			VC	11.04536	1 in 33
1913		CO		150			VC	3.619828	
2607	142.32	CO	138.91	300			VC	41.63047	1 in 22
9206	133.07	CO	130.37	300			VC	38.94868	
7002	142.68	CO	141.03	225			VC	15.81139	1 in 10
7205	131.21	CO	127.81	225			VC	27.30367	1 in 38
7901	143.95	CO	141.4	225			VC	26.4764	1 in 17
8604	140.85	CO	0	525			VC	70.55257	
7916		CO		150			VC	12.06794	
8905	141.05	CO	135.96	375			VC	7.27584	
1702	141.91	SW	0	225			VC	63.18677	
7101	140.88	CO	138.82	225			VC	70.85902	1 in 23
0102	141.92	CO	139.27	225			VC	51.10773	1 in 33
8108	138.26	CO	137.11	400			BR	12.16553	1 in 8
1001	139.43	CO	136.36	300			VC	82.5409	1 in 62
7907	143.41	CO	140.04	225			VC	45.45327	
1703	138.63	CO	135.94	450			VC	13.92839	
7909	143.77	CO	140.81	225			VC	19.6121	
0007	139.52	CO	136.24	375			VC	61.61169	
2101	137.85	CO	134.78	450			CO	48.70318	1 in 28
8904		CO	0	700			BR	40.5689	
9701	139.63	CO	135.67	225			VC	16.27882	1 in 102
0704	139.32	SW	137.56	225			VC	31.82766	1 in 138
0206	141.27	CO	138.48	300			VC	91.6832	1 in 19
1601	141.09	SW	0	225			VC	14.4222	
7008	143.52	CO	141.56	225			VC	34.82815	1 in 0.25054420
1700	135.91	CO	135.91	600			VC	9.784431	
9601	140.78	CO	136.43	525			VC	35.48129	1 in 394
2602	140.45	CO	137.59	225			VC	10.29563	
7804	143.46	CO	139.94	300			VC	30.41381	1 in 42
1803	141	CO	138.75	225			VC	96.18055	1 in 75
7004	143.28	CO	141.57	225			VC	16.13907	1 in 85
8809		CO		150			VC	6.828858	
2102	138	CO	134.99	450			CO	8.067019	1 in 42
7103	142.01	CO	138.86	225			VC	33.12099	
0003	140.73	CO	138.93	150			VC	5.830952	
1104	140.68	CO	138.94	150			VC	5.385165	
8002		CO	0	375			VC	104.133	
0002	140.72	CO	138.49	300			VC	38.07896	1 in 28
1906	140.44	SW	139.38	100			VC	2.236068	
1106	140.34	CO	137.05	225			VC	102.7519	

Refno	Cover	Func	Invert	Size x	Size y	Shape	Matl	Length	Grad

LEGEND

Abandoned | Foul | Surface Water | Combined

- Public Sewer
- Private Sewer
- Section 104
- Rising Main
- Sludge Main
- Overflow
- Water Course
- Highway Drain

All point assets follow the standard colour convention:
red - combined, blue - surface water, brown - foul, purple - overflow

- Manhole
- Head of System
- Extent of Survey
- Rodding Eye
- Inlet
- Discharge Point
- Vortex
- Penstock
- Washout Chamber
- Valve
- Air Valve
- Non Return Valve
- Soakaway
- Gully
- Cascade
- Flow Meter
- Hatch Box
- Oil Interceptor
- Summit
- Drop Shaft
- Orifice Plate
- Side Entry Manhole
- Outfall
- Screen Chamber
- Inspection Chamber
- Bifurcation Chamber
- Lamp Hole
- T Junction / Saddle
- Catchpit
- Valve Chamber
- Vent Column
- Vortex Chamber
- Penstock Chamber
- Network Storage Tank
- Sewer Overflow
- Ww Treatment Works
- Ww Pumping Station
- Septic Tank
- Control Kiosk
- Change of Characteristic

MANHOLE FUNCTION

- FO Foul
- SW Surface Water
- CO Combined
- OV Overflow

SEWER SHAPE

- CI Circular
- EG Egg
- OV Oval
- FT Flat Top
- RE Rectangular
- SQ Square
- TR Trapezoidal
- AR Arch
- BA Barrel
- HO HorseShoe
- UN Unspecified

SEWER MATERIAL

- AC Asbestos Cement
- BR Brick
- PE Polyethylene
- RP Reinforced Plastic Matrix
- CO Concrete
- CSB Concrete Segment Bolted
- CSU Concrete Segment Unbolted
- CC Concrete Box Culverted
- PSC Plastic / Steel Composite
- GRC Glass Reinforcrd Plastic
- DI Ductile Iron
- PVC Polyvinyl Chloride
- CI Cast Iron
- SI Spun Iron
- ST Steel
- VC Vitrified Clay
- PP Polypropylene
- PF Pitch Fibre
- MAC Masonry, Coursed
- MAR Masonry, Random
- U Unspecified

Address or Site Reference:

Neighbourhood Rochdale,

Scale: 1:1250 **Date:** 31/10/2020

Sheet: 1 of 1

Printed by: Property Searches

SEWER RECORDS

United Utilities
Water for the North West

APPENDIX C

PROPOSED DRAINAGE DRAWINGS

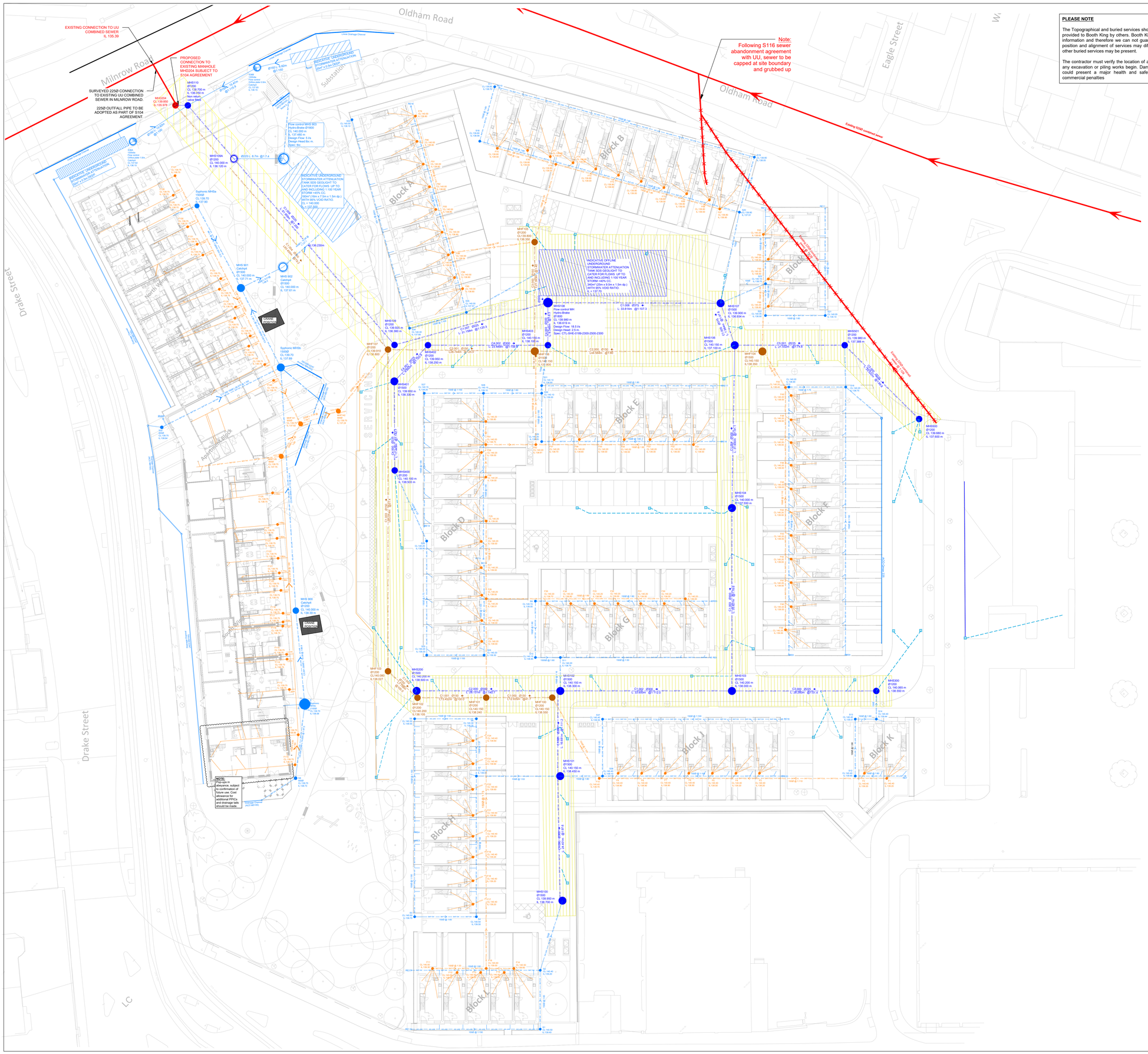

PLEASE NOTE

The Topographical and buried services shown on this drawing were provided to Booth King by others. Booth King have not verified this information and therefore we can not guarantee its accuracy. The position and alignment of services may differ from that shown and other buried services may be present.

The contractor must verify the location of all buried services before any excavation or piling works begin. Damage to existing services could present a major health and safety risk plus associated commercial penalties

STRATEGY NOTES:

1. Private drainage connections to drain surface water and foul water separately from each plot and into separate main foul and surface water sewers. For Adopted drainage arrangements refer to BKPL drawings:

   - ORRD-BKP-ZZ-XX-DR-C-0500 - Adopted Drainage GA-Sht 1
   - ORRD-BKP-ZZ-XX-DR-C-0501 - Adopted Drainage GA-Sht 2

2. Surface water run-off from highways and parking bays to drain via channel drains and gullieys (as shown), prior to connection into the main adopted sewer.
3. Surface water to travel via gravity through the network to a flow control device installed within MHS108.
4. Flow control device limited to 25l/sec.
5. Attenuation provided in the form of cellular storage crates, with a capacity to retain up to 400m³ of surface water.
6. The network has been designed to accommodate floodwater from all storm events up to and including a 1 in 100yr storm, with an additional allowance of 40% included for the effects of climate change.
7. Downstream of the flow control, the separate flows from both the surface and foul water systems will be combined and discharge through a combined sewer into an adopted combined sewer subject to a S104.

PLOT DRAINAGE KEY:

BKP SW — BKP SW	Proposed Private SW sewer.
	Proposed Private FW sewer.
BKP SW — BKP SW	Proposed Adopted SW sewer.
BKP FOUL — BKP FOUL	Proposed Adopted FW sewer.
	Proposed highway sewer.
	Filter Drain
	Existing combined sewer.
	Phase 1 Site boundary.
	Planning Application boundary.
	Existing adopted sewer to be grubbed up
	6m easement strip UU. Subject to S116

NOTES:

1. Do not scale from this drawing.
2. This drawing is copyright and is sent to you in confidence. It must not be copied, used or disclosed, in whole or in part, to third parties without written permission. It remains the property of Booth King Partnership Ltd. (BKPL) and must be returned on request.
3. This drawing is to be read in conjunction with all relevant contractual documents.
4. Anyone using this drawing must be aware of their legal duties under the CDM Regulations 2015, refer to the HSE website for further information. BKPL are not Principal Designers.
5. All dimensions shown on this drawing are in millimeters unless noted otherwise.
6. If the Contractor consider that they do not have sufficient information to safely complete the works detailed on this drawing, they should contact the Engineer.
7. This document uses revision codes in accordance with ISO EN 19650: **P.** Preliminary (non-contractual) - review, comment or approval. **C.** Contractual - Approved for stage completion.
8. This document uses status codes in accordance with ISO EN 19650:
   Work in progress:
   S0 - WIP
   Shared (non-contractual):
   S1 - Coordination, **S2** - Information, **S3** - Review, **S4** & **S5** - Approval.
   Published (contractual):
   A1, **An**, etc. (where "n" relates to the project stage)
9. This document uses project stages in accordance with the IStructE Structural Plan of Work 2020:
   2 - Concept, **3** - Coordination, **4** - Technical Design, **4.5** - Production Design, **5** - Construction, **6** - Handover.
10. Only documents with a revision code C# (where '#' relates to a revision number) and status code A4 or A5 are suitable for construction. Any deviations to that which is on site is not the liability of BKPL.

DRAINAGE NOTES:

1. All adoptable works to be in accordance with 'Design Guidance for Sewers' and United Utilities standard details.
2. All manhole cover levels to be confirmed by Landscape Architect.
3. Plastic pipes (PVC-U) to be flexibly jointed and comply with the requirements of BS EN 1401-1 1998.
4. Until final surface is placed, heavy traffic is not to be allowed over pipe trenches without special precautions.
5. Pipes and fittings are to be laid in accordance with the manufacturers recommendations.
6. All Manholes should be concrete manhole rings unless stated.
7. All ICs to be PPIC 475Ø
8. All SVP positions TBC and set out by Architect.
9. For setting out of all pop-up positions refer to MEP snd Architectural GA and details.
10. Civil engineering contractor to arrange for:
    a) Own services and temporary supplies
    b) Pathway & partial closure as deemed required by their method statement. Including costs.
    c) Temporary adequate over pumping as deemed required by civil engineers method of construction.
11. Type 2 codding access is to be provided at all pop-ups. Design and detail by others.
12. Protection to drains and gully connections may be concrete bed surround between cover depths of 450mm to 200mm.
13. The contractor should confirm the locations of existing services prior to construction.

REV.	DATE	REVISION DETAILS	INITIALS
P03	12.02.25	Phase 1 updated and issued for tender	EZ
P02	10.02.25	Phase 1 drainage introduced, layout re-designed accordingly	EZ
P01	07.02.25	Phase 1 drainage introduced, layout re-designed accordingly	EZ
		CURRENT DRAWING REVISION CHECKED BY	RS
		CURRENT DRAWING REVISION APPROVED BY	RS

DRAWING STATUS: S4

PROJECT STAGE: Stage 4

booth king PARTNERSHIP LIMITED

CONSULTING CIVIL & STRUCTURAL ENGINEERS

www.booth-king.co.uk office@booth-king.co.uk

RAMSBOTTOM Tel: 01706 822 022 | **MANCHESTER** Tel: 0161 694 7087 | **EDINBURGH** Tel: 0131 229 1547

PROJECT:

Oldham Road, Rochdale Development

TITLE:

Drainage GA Masterplan

SCALE (A0)	AUTHOR	DATE	REVISION	BKPL No.
1:250	EZ	Feb'25	P03	14251

DRAWING REF:

ORRD-BKP-ZZ-XX-DR-C-00560

PLEASE NOTE

The Topographical and buried services shown on this drawing were provided to Booth King by others. Booth King have not verified this information and therefore we can not guarantee its accuracy. The position and alignment of services may differ from that shown and other buried services may be present.

The contractor must verify the location of all buried services before any excavation or piling works begin. Damage to existing services could present a major health and safety risk plus associated commercial penalties

STRATEGY NOTES:

1. Private drainage connections to drain surface water and foul water separately from each plot and into separate main foul and surface water sewers. For Adopted drainage arrangements refer to BKPL drawings:

   - ORRD-BKP-ZZ-XX-DR-C-0500 - Adopted Drainage GA-Sht 1
   - ORRD-BKP-ZZ-XX-DR-C-0501 - Adopted Drainage GA-Sht 2

2. Surface water run-off from highways and parking bays to drain via channel drains and gullieys (as shown), prior to connection into the main adopted sewer.
3. Surface water to travel via gravity through the network to a flow control device installed within MHS108.
4. Flow control device limited to 25l/sec.
5. Attenuation provided in the form of cellular storage crates, with a capacity to retain up to 400m³ of surface water.
6. The network has been designed to accommodate floodwater from all storm events up to and including a 1 in 100yr storm, with an additional allowance of 40% included for the effects of climate change.
7. Downstream of the flow control, the separate flows from both the surface and foul water systems will be combined and discharge through a combined sewer into an adopted combined sewer subject to a S104.

PLOT DRAINAGE KEY:

- BKP SW — Proposed Private SW sewer.
- Proposed Private FW sewer.
- BKP SW — Proposed Adopted SW sewer.
- BKP FOUL — Proposed Adopted FW sewer.
- Proposed highway sewer.
- Filter Drain
- Existing combined sewer.
- Phase 1 Site boundary.
- Planning Application boundary.
- Existing adopted sewer to be grubbed up
- 6m easement strip UU. Subject to S116

NOTES:

1. Do not scale from this drawing.
2. This drawing is copyright and is sent to you in confidence. It must not be copied, used or disclosed, in whole or in part, to third parties without written permission. It remains the property of Booth King Partnership Ltd. (BKPL) and must be returned on request.
3. This drawing is to be read in conjunction with all relevant contractual documents.
4. Anyone using this drawing must be aware of their legal duties under the CDM Regulations 2015, refer to the HSE website for further information. BKPL are not Principal Designers.
5. All dimensions shown on this drawing are in millimeters unless noted otherwise.
6. If the Contractor consider that they do not have sufficient information to safely complete the works detailed on this drawing, they should contact the Engineer.
7. This document uses revision codes in accordance with ISO EN 19650: **P.** Preliminary (non-contractual) - review, comment or approval. **C.** Contractual - Approved for stage completion.
8. This document uses status codes in accordance with ISO EN 19650:
   Work in progress:
   S0 - WIP
   Shared (non-contractual):
   S1 - Coordination, **S2** - Information, **S3** - Review, **S4** & **S5** - Approval.
   Published (contractual):
   A1, **An**, etc. (where "n" relates to the project stage)
9. This document uses project stages in accordance with the IStructE Structural Plan of Work 2020:
   2 - Concept, **3** - Coordination, **4** - Technical Design, **4.5** - Production Design, **5** - Construction, **6** - Handover.
10. Only documents with a revision code C# (where '#' relates to a revision number) and status code A4 or A5 are suitable for construction. Any deviations to that which is on site is not the liability of BKPL.

DRAINAGE NOTES:

1. All adoptable works to be in accordance with 'Design Guidance for Sewers' and United Utilities standard details.
2. All manhole cover levels to be confirmed by Landscape Architect.
3. Plastic pipes (PVC-U) to be flexibly jointed and comply with the requirements of BS EN 1401-1 1998.
4. Until final surface is placed, heavy traffic is not to be allowed over pipe trenches without special precautions.
5. Pipes and fittings are to be laid in accordance with the manufacturers recommendations.
6. All Manholes should be concrete manhole rings unless stated.
7. All ICs to be PPIC 475Ø
8. All SVP positions TBC and set out by Architect.
9. For setting out of all pop-up positions refer to MEP snd Architectural GA and details.
10. Civil engineering contractor to arrange for:
    a) Own services and temporary supplies
    b) Pathway & partial closure as deemed required by their method statement. Including costs.
    c) Temporary adequate over pumping as deemed required by civil engineers method of construction.
11. Type 2 rodding access is to be provided at all pop-ups. Design and detail by others.
12. Protection to drains and gully connections may be concrete bed surround between cover depths of 450mm to 200mm.
13. The contractor should confirm the locations of existing services prior to construction.

REV.	DATE	REVISION DETAILS	INITIALS
P03	12.02.25	Phase 1 - Issued for Tender	EZ
P02	10.02.25	Phase 1 drainage introduced, layout re-designed accordingly	EZ
P01	07.02.25	Phase 1 drainage introduced, layout re-designed accordingly	EZ
		CURRENT DRAWING REVISION CHECKED BY	RS
		CURRENT DRAWING REVISION APPROVED BY	RS

DRAWING STATUS: S4

PROJECT STAGE: Stage 4

boothking PARTNERSHIP LIMITED

CONSULTING CIVIL & STRUCTURAL ENGINEERS

www.booth-king.co.uk office@booth-king.co.uk

RAMSBOTTOM Tel: 01706 822 022 | **MANCHESTER** Tel: 0161 694 7087 | **EDINBURGH** Tel: 0131 229 1547

PROJECT:

Oldham Road, Rochdale Development

TITLE:

Drainage GA Phase 1

SCALE (A0)	AUTHOR	DATE	REVISION	BKPL No.
1:250	EZ	Feb'25	P03	14251

DRAWING REF:

ORRD-BKP-ZZ-XX-DR-C-00561

PHASE 1 FOUL WATER DRAINAGE MH SCHEDULE

REFERENCE	COVER LEVEL (m)	INVERT LEVEL (m)	DEPTH (m)	DIAMETER (mm)	TYPE	COVER
MHF107	139.910	136.800	3.110	1200	PCC	D400
F110	139.750	138.750	1.000	450	PPIC	B125
F111	139.750	138.660	1.090	450	PPIC	B125
F112	139.750	138.750	1.000	450	PPIC	B125
F114	139.750	138.750	1.000	450	PPIC	B125
F115	139.750	138.750	1.000	450	PPIC	B125
F116	139.750	138.750	1.000	450	PPIC	B125
F117	139.750	138.750	1.000	450	PPIC	B125
F118	139.750	138.750	1.000	450	PPIC	B125
F119	139.750	138.750	1.000	450	PPIC	B125
F120	139.750	138.750	1.000	450	PPIC	B125
F121	139.750	138.750	1.000	450	PPIC	B125
F122	139.750	138.750	1.000	450	PPIC	B125
F123	139.750	138.750	1.000	450	PPIC	B125
F124	139.750	138.750	1.000	450	PPIC	B125
F125	139.750	138.750	1.000	450	PPIC	B125
MHF126	139.750	137.750	2.000	900	PCC	D400
F127	139.750	138.750	1.000	450	PPIC	B125
F128	139.750	138.750	1.000	450	PPIC	B125
F129	139.750	138.750	1.000	450	PPIC	B125
F130	139.750	138.750	1.000	450	PPIC	B125
F131	139.750	138.750	1.000	450	PPIC	B125
F132	139.750	138.750	1.000	450	PPIC	B125
F133	139.750	138.750	1.000	450	PPIC	B125
F134	139.750	138.750	1.000	450	PPIC	B125
F135	139.750	138.750	1.000	450	PPIC	B125
F136	139.750	138.750	1.000	450	PPIC	B125
F137	139.750	138.750	1.000	450	PPIC	B125
F138	139.750	138.750	1.000	450	PPIC	B125
F139	139.750	138.750	1.000	450	PPIC	B125
F140	139.750	138.750	1.000	450	PPIC	B125
MHF141	139.750	137.620	2.130	900	PCC	D400
MHF142	139.750	137.360	2.390	900	PCC	D400

PHASE 1 SURFACE WATER DRAINAGE MH SCHEDULE

REFERENCE	COVER LEVEL (m)	INVERT LEVEL (m)	DEPTH (m)	DIAMETER (mm)	TYPE	COVER
S8	139.750	138.730	1.020	600	PPIC	B125
S32	139.750	138.640	1.110	600	PPIC	B125
S36A	137.620	136.150	1.470	1200	PPC	D400
S36B	137.650	136.150	1.500	1200	PPC	D400
Syphonic MHSa	139.700	137.900	1.800	1500	PPC	D400
Syphonic MHSb	139.700	137.890	1.810	1500	PPC	D400
Syphonic MHSc	139.700	138.580	1.120	2100	PPC	D400
MHS900	140.000	138.390	1.610	1200	PPC	D400
MHS901	140.000	137.710	2.290	1500	PPC	D400
MHS902	140.000	137.610	2.390	1500	PPC	D400
MHS903	140.000	137.480	2.520	1800	PPC	D400
MHS109	139.920	136.360	3.560	1200	PPC	D400
MHS109A	140.000	136.120	3.880	1200	PPC	D400
MHS110	138.700	136.050	2.650	1200	PPC	D400

PHASE 1 COMBINED WATER DRAINAGE MH SCHEDULE

REFERENCE	COVER LEVEL (m)	INVERT LEVEL (m)	DEPTH (m)	DIAMETER (mm)	TYPE	COVER
MHD204	139.850	135.978	3.872	1200	PPC	D400

NOTES:

1. Do not scale from this drawing.
2. This drawing is copyright and is sent to you in confidence. It must not be copied, used or disclosed, in whole or in part, to third parties without written permission. It remains the property of Booth King Partnership Ltd. (BKPL) and must be returned on request.
3. This drawing is to be read in conjunction with all relevant contractual documents.
4. Anyone using this drawing must be aware of their legal duties under the CDM Regulations 2015, refer to the HSE website for further information. BKPL are not Principal Designers.
5. All dimensions shown on this drawing are in millimeters unless noted otherwise.
6. If the Contractor consider that they do not have sufficient information to safely complete the works detailed on this drawing, they should contact the Engineer.
7. This document uses revision codes in accordance with ISO EN 19650:
   P. Preliminary (non-contractual) - review, comment or approval.
   C. Contractual - Approved for stage completion.
8. This document uses status codes in accordance with ISO EN 19650:
   Work in progress:
   S0 - WIP
   Shared (non-contractual):
   S1 - Coordination, **S2** - Information, **S3** - Review, **S4** & **S5** - Approval.
   Published (contractual):
   A1, **An**, etc. (where "n" relates to the project stage)
9. This document uses project stages in accordance with the IStructE Structural Plan of Work 2020:
   2 - Concept, **3** - Coordination, **4** - Technical Design,
   4.5 - Production Design, **5** - Construction, **6** - Handover.
10. Only documents with a revision code C# (where '#' relates to a revision number) and status code A4 or A5 are suitable for construction. Any deviations to that which is on site is not the liability of BKPL.

REV.	DATE	REVISION DETAILS	INITIALS
P01	12.02.25	Issued for Tender	JDE
		CURRENT DRAWING REVISION CHECKED BY	EZ
		CURRENT DRAWING REVISION APPROVED BY	EZ

DRAWING STATUS: S4

PROJECT STAGE: Stage 4

boothking PARTNERSHIP LIMITED
CONSULTING CIVIL & STRUCTURAL ENGINEERS
www.booth-king.co.uk office@booth-king.co.uk
RAMSBOTTOM Tel: 01706 822 022 | **MANCHESTER** Tel: 0161 694 7087 | **EDINBURGH** Tel: 0131 229 1547

PROJECT:
Oldham Road,
Rochdale Development

TITLE:
Phase 1 Manhole Schedule

SCALE (A1)	AUTHOR	DATE	REVISION	BKPL No.
N/A	JDE	Feb '25	P01	14251

DRAWING REF:
ORDD-BKP-ZZ-XX-DR-C-00580

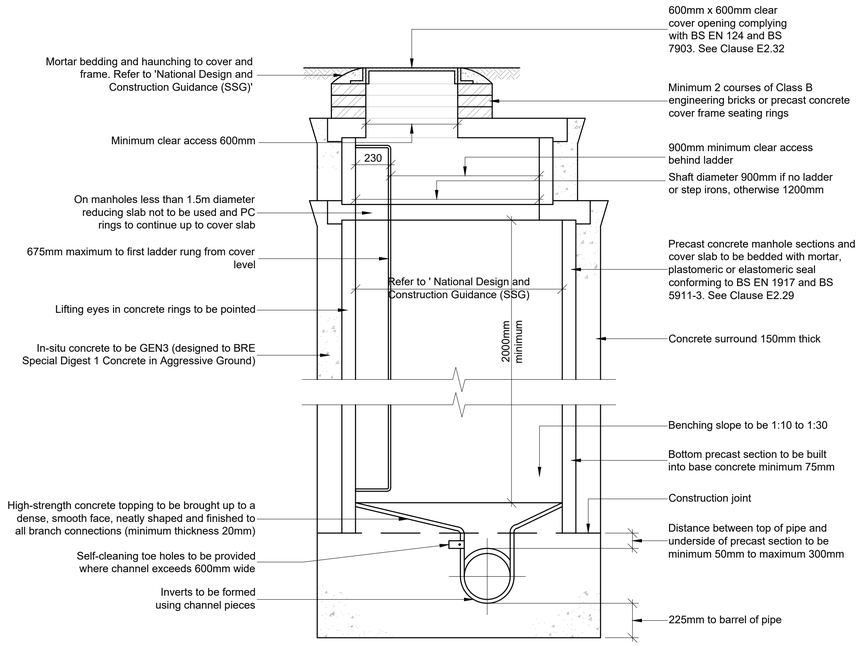

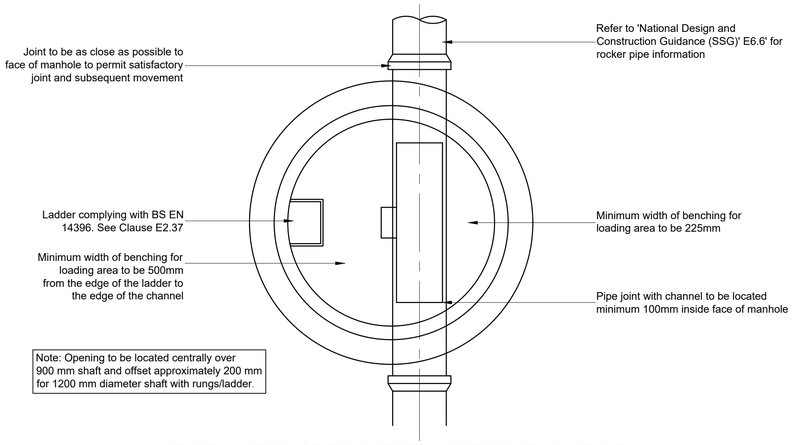

TYPICAL PRECAST CONCRETE MANHOLE DETAIL - 'TYPE A'

(DEPTH FROM COVER LEVEL TO SOFFIT OF PIPE 3.0M TO 6.0M)
SCALE 1:20

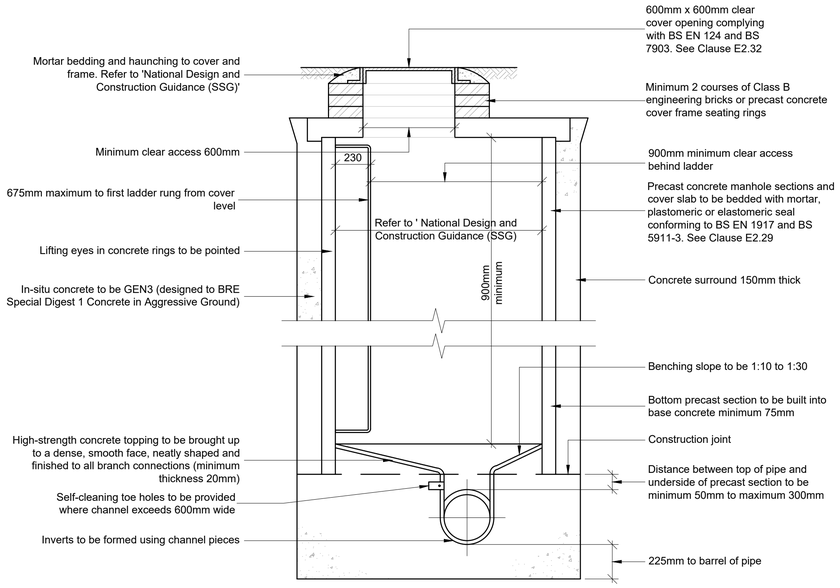

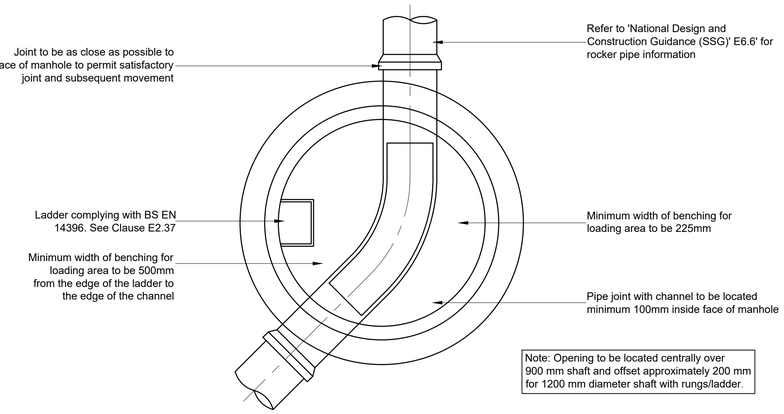

TYPICAL PRECAST CONCRETE MANHOLE DETAIL - 'TYPE B'

(MAXIMUM DEPTH FROM COVER LEVEL TO SOFFIT OF PIPE 3.0m)
SCALE 1:20

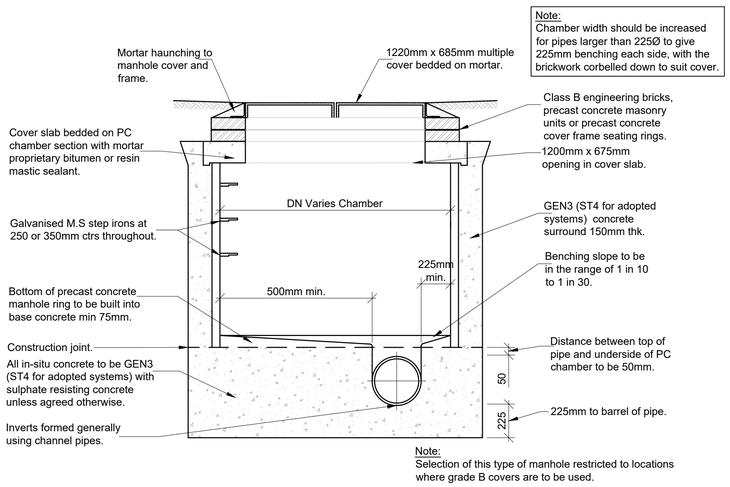

TYPICAL PRECAST CONCRETE MANHOLE DETAIL - 'TYPE E'

(DEPTH FROM GROUND LEVEL TO SOFFIT OF PIPE 1.00m TO 1.45m)
SCALE 1:20

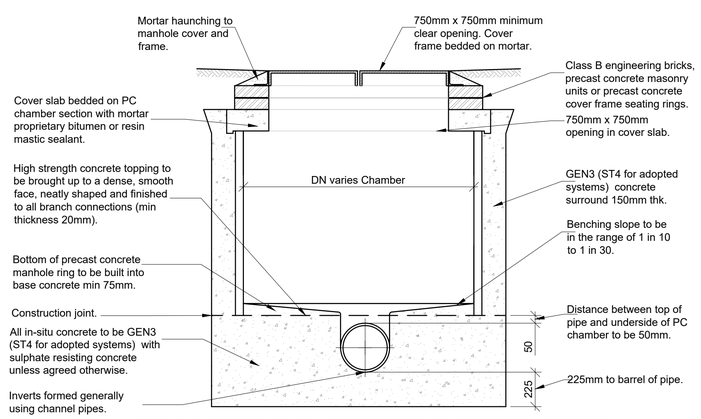

TYPICAL PRECAST CONCRETE MANHOLE DETAIL - 'TYPE F'

(DEPTH FROM GROUND LEVEL TO SOFFIT OF PIPE LESS THAN 1.00m)
SCALE 1:20

Note:
Approval of the Undertaker must be given for installation of this type of manhole.
Selection of this type of manhole restricted to locations where grade B covers are to be used.

NOTES:

1. Do not scale from this drawing.
2. This drawing is copyright and is sent to you in confidence. It must not be copied, used or disclosed, in whole or in part, to third parties without written permission. It remains the property of Booth King Partnership Ltd. (BKPL) and must be returned on request.
3. This drawing is to be read in conjunction with all relevant contractual documents.
4. Anyone using this drawing must be aware of their legal duties under the CDM Regulations 2015, refer to the HSE website for further information. BKPL are not Principal Designers.
5. All dimensions shown on this drawing are in millimeters unless noted otherwise.
6. If the Contractor consider that they do not have sufficient information to safely complete the works detailed on this drawing, they should contact the Engineer.
7. This document uses revision codes in accordance with ISO EN 19650:
   P. Preliminary (non-contractual) - review, comment or approval.
   C. Contractual - Approved for stage completion.
8. This document uses status codes in accordance with ISO EN 19650:
   Work in progress:
   S0 - WIP
   Shared (non-contractual):
   S1 - Coordination, **S2** - Information, **S3** - Review, **S4** & **S5** - Approval.
   Published (contractual):
   A1, **An**, etc. (where "n" relates to the project stage)
9. This document uses project stages in accordance with the IStructE Structural Plan of Work 2020:
   2 - Concept, **3** - Coordination, **4** - Technical Design,
   4.5 - Production Design, **5** - Construction, **6** - Handover.
10. Only documents with a revision code C# (where '#' relates to a revision number) and status code A4 or A5 are suitable for construction. Any deviations to that which is on site is not the liability of BKPL.

NOTE:

All inlet and outlet pipes at every manhole must have stub and rocker pipes as shown within United Utilities standard detail drawings.

All pipes and manholes to be provided with 150mm minimum concrete surround and bed.

All manholes are to be constructed in accordance with United Utilities standard details details & 'Design and Construction Guidance for Sewers'.

REV.	DATE	REVISION DETAILS	INITIALS
P01	14.02.25	Issued for Tender	JDE
		CURRENT DRAWING REVISION CHECKED BY	EZ
		CURRENT DRAWING REVISION APPROVED BY	EZ

DRAWING STATUS: S4
PROJECT STAGE: Stage 4

boothking PARTNERSHIP LIMITED
CONSULTING CIVIL & STRUCTURAL ENGINEERS
www.booth-king.co.uk office@booth-king.co.uk
RAMSBOTTOM Tel: 01706 822 022 | **MANCHESTER** Tel: 0161 694 7087 | **EDINBURGH** Tel: 0131 229 1547

PROJECT:
Oldham Road,
Rochdale Development

TITLE:
Phase 1
Drainage
Details Sheet 1

SCALE (A1)	AUTHOR	DATE	REVISION	BKPL No.
N/A	JDE	Feb '25	P01	14251

DRAWING REF:
ORDD-BKP-ZZ-XX-DR-C-00571

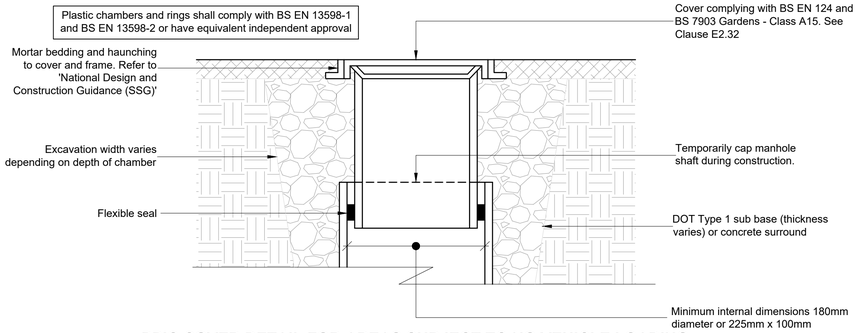

PPIC COVER DETAIL FOR AREAS SUBJECT TO NO VEHICLE LOADING (SUITABLE FOR SOFT LANDSCAPING AREAS)

SCALE 1:10

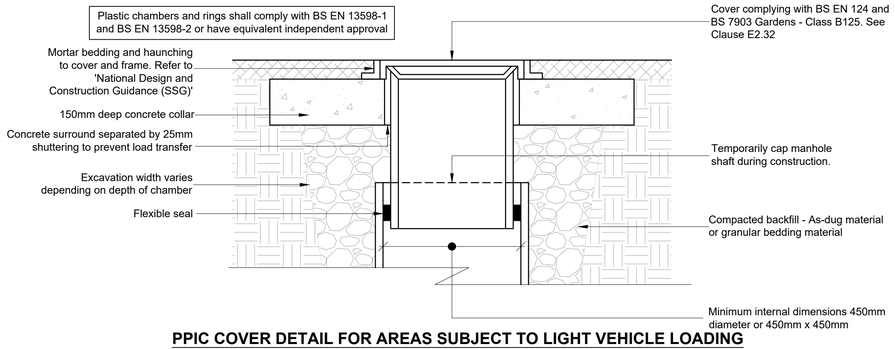

PPIC COVER DETAIL FOR AREAS SUBJECT TO LIGHT VEHICLE LOADING (DOMESTIC DRIVEWAYS OR FOOTWAYS)

SCALE 1:10

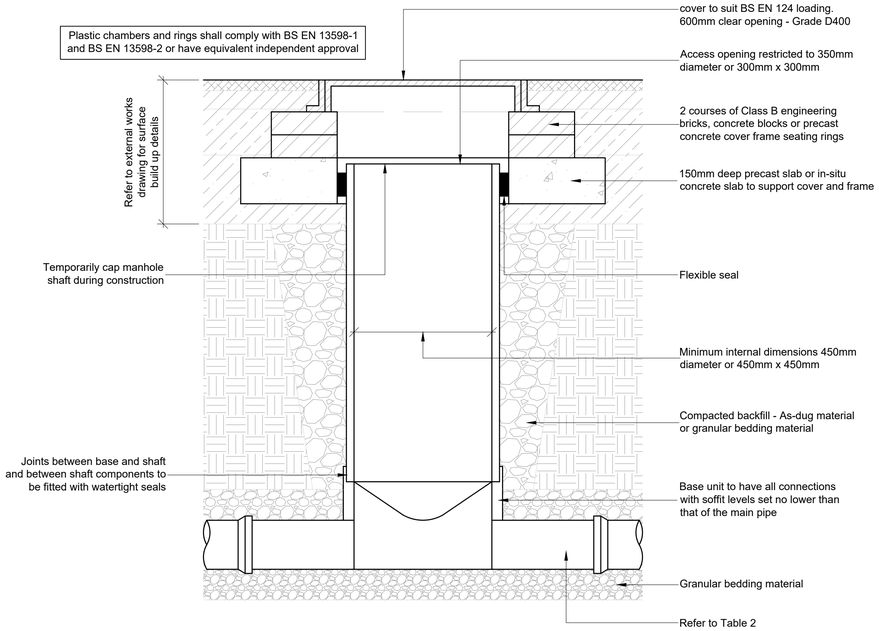

PPIC COVER DETAIL FOR AREAS SUBJECT TO HEAVY VEHICLE LOADING

SCALE 1:10

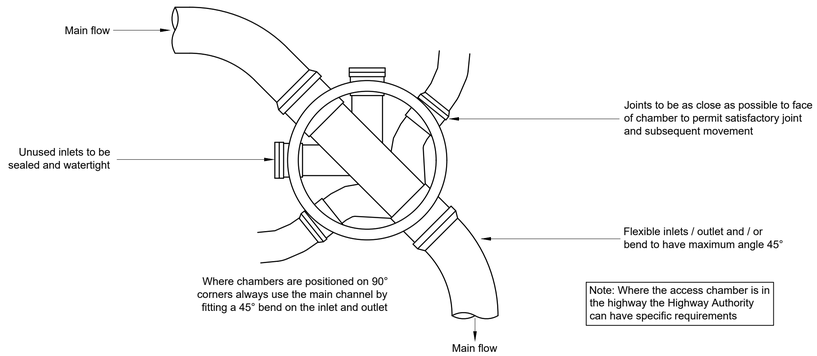

TYPICAL PPIC ACCESS CHAMBER DETAIL - 'TYPE 3' (FLEXIBLE MATERIAL DETAIL)

(DEPTH FROM COVER LEVEL TO SOFFIT OF PIPE 3.0m)

SCALE 1:10

NOTES:

1. Do not scale from this drawing.
2. This drawing is copyright and is sent to you in confidence. It must not be copied, used or disclosed, in whole or in part, to third parties without written permission. It remains the property of Booth King Partnership Ltd. (BKPL) and must be returned on request.
3. This drawing is to be read in conjunction with all relevant contractual documents.
4. Anyone using this drawing must be aware of their legal duties under the CDM Regulations 2015, refer to the HSE website for further information. BKPL are not Principal Designers.
5. All dimensions shown on this drawing are in millimeters unless noted otherwise.
6. If the Contractor consider that they do not have sufficient information to safely complete the works detailed on this drawing, they should contact the Engineer.
7. This document uses revision codes in accordance with ISO EN 19650:
   P. Preliminary (non-contractual) - review, comment or approval.
   C. Contractual - Approved for stage completion.
8. This document uses status codes in accordance with ISO EN 19650:
   Work in progress:
   S0 - WIP
   Shared (non-contractual):
   S1 - Coordination, **S2** - Information, **S3** - Review, **S4** & **S5** - Approval.
   Published (contractual):
   A1, **An**, etc. (where "n" relates to the project stage)
9. This document uses project stages in accordance with the IStructE Structural Plan of Work 2020:
   2 - Concept, **3** - Coordination, **4** - Technical Design,
   4.5 - Production Design, **5** - Construction, **6** - Handover.
10. Only documents with a revision code C# (where '#' relates to a revision number) and status code A4 or A5 are suitable for construction. Any deviations to that which is on site is not the liability of BKPL.

NOTE:

All inlet and outlet pipes at every manhole must have stub and rocker pipes as shown within United Utilities standard detail drawings.

All pipes and manholes to be provided with 150mm minimum concrete surround and bed.

All manholes are to be constructed in accordance with United Utilities standard details details & 'Design and Construction Guidance for Sewers'.

REV.	DATE	REVISION DETAILS	INITIALS
P01	14.02.25	Issued for Tender	JDE
		CURRENT DRAWING REVISION CHECKED BY	EZ
		CURRENT DRAWING REVISION APPROVED BY	EZ

DRAWING STATUS: S4

PROJECT STAGE: Stage 4

boothking PARTNERSHIP LIMITED

CONSULTING CIVIL & STRUCTURAL ENGINEERS

www.booth-king.co.uk office@booth-king.co.uk

RAMSBOTTOM Tel: 01706 822 022 | **MANCHESTER** Tel: 0161 694 7087 | **EDINBURGH** Tel: 0131 229 1547

PROJECT:

Oldham Road, Rochdale Development

TITLE:

Phase 1 Drainage Details Sheet 2

SCALE (A1)	AUTHOR	DATE	REVISION	BKPL No.
N/A	JDE	Feb '25	P01	14251

DRAWING REF:

ORDD-BKP-ZZ-XX-DR-C-00572

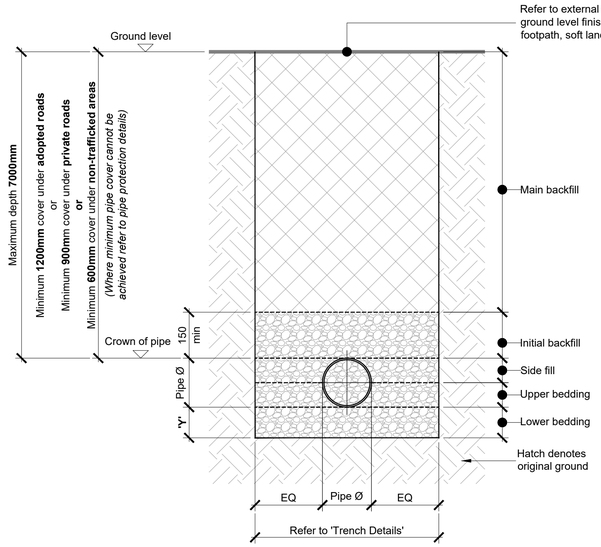

FIGURE 2

TABLE 3 (refer to figure 2)	
MINIMUM LOWER BEDDING DEPTH	
TRENCH BED CONDITIONS	**MINIMUM DEPTH ('Y')**
Usual soil conditions	100mm
Rock or hard soil conditions	150mm

N.B. Information shown in 'Table 3' has been taken from 'BS EN 1610:2015 Construction and testing of drains and sewers - 7.2 Bedding construction types'

TABLE 4 (refer to figure 2)		
BEDDING & BACKFILL MATERIAL		
LOCATION	**SUITABLE MATERIAL** ('DN' denotes pipe Ø)	
Main backfill	As dug material (native soil) may be used as long as it complies with *BS EN 1610:2015 Construction and testing of drains and sewers - 5.2.2 Native soil'* & *'BS 8000-14:1989 Section 3.3'*. Initial 200mm of main backfill must be free from stones larger than 40mm, lumps of clay over 75mm, timber, frozen material & vegetable matter. N.B. No mechanical compaction to be applied until first 200mm of main backfill in place.	ALL MATERIAL TO BE PLACED & COMPACTED AS SPECIFIED IN 'BS 8000-14:1989, SECTION 3'
Initial backfill Side fill	Selected fill or granular fill free from stones larger than 40mm, lumps of clay over 75mm, timber, frozen material & vegetable matter. As dug material (native soil) may be used as long as it complies with *BS EN 1610:2015 Construction and testing of drains and sewers - 5.2.2 Native soil'* & *'BS 8000-14:1989 Section 3.2.3'*. N.B. No mechanical compaction to be applied.	
Upper bedding Lower bedding	Single sized or graded granular material (from 5mm) not exceeding: - 22mm for DN ≤ 200mm. - 40mm for DN > 200mm up to DN ≤ 600mm. - 60mm for DN > 600mm. - For DN < 100mm all written instructions of the manufacturer shall be complied with. N.B. No mechanical compaction to be applied.	

N.B. Information shown in 'Table 4' has been taken from 'BS EN 1610:2015 Construction and testing of drains and sewers' & 'BS 8000-14:1989'

N.B. Assumed normal ground conditions. Special bedding construction will be required where the trench formation has little bearing strength, i.e. Soft ground, running sand, etc. Booth King Partnership Limited to be contacted for revised bedding detail in this circumstance.

N.B. Booth King Partnership Limited advise installer to refer to plastic pipe manufactures specific bedding details to ensure minimum bedding & backfilling requirements are met.

PIPE BEDDING DETAIL
SCALE 1:10

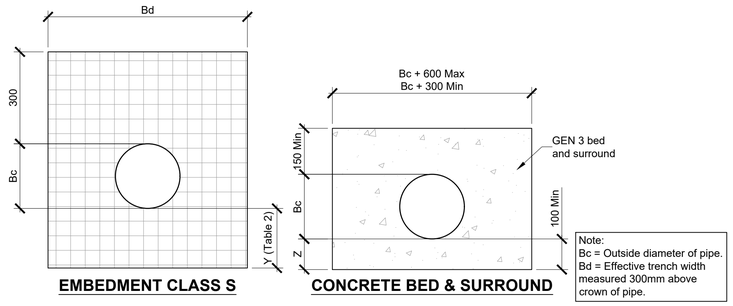

EMBEDMENT CLASS S

CONCRETE BED & SURROUND

TABLE 2 (EMBEDMENT DIMENSIONS FOR RIGID PIPES)					
Nominal Internal Pipe Diameter	Dimension Y1 Even Trench Bottom (Min)	Dimension Y2 Rock Or Uneven Trench Bottom (Min)	Processed Granular Material	Dimension Z (Min)	Max Permitted Trench Width
150	100	200	10mm single sized or 14mm - 5mm graded	100	750
225	100	200		100	825
300	100	200		100	925
375	100	200	14mm single sized or 14mm - 5mm graded	100	1050
450	150	200		150	1150
525	150	250		150	1200

NOTE: For pipe sizes > 525mm Ø, refer to UU ' Developer Services Detail B'

PIPE EMBEDMENT DETAIL
SCALE 1:10

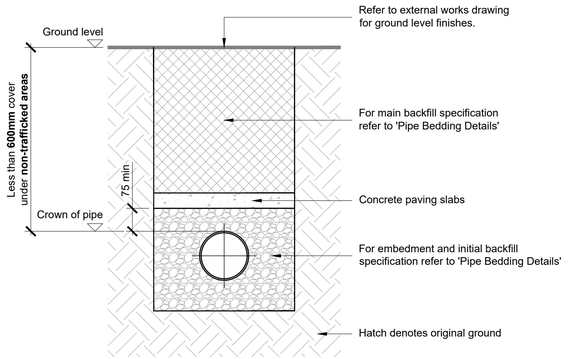

PROTECTION FOR PIPES LAID AT SHALLOW DEPTHS IN NON-TRAFFICKED AREAS
(N.B INFORMATION SHOWN HAS BEEN TAKEN FROM 'BS EN 8301:1985 - CLAUSE 11.1.2')
SCALE 1:10

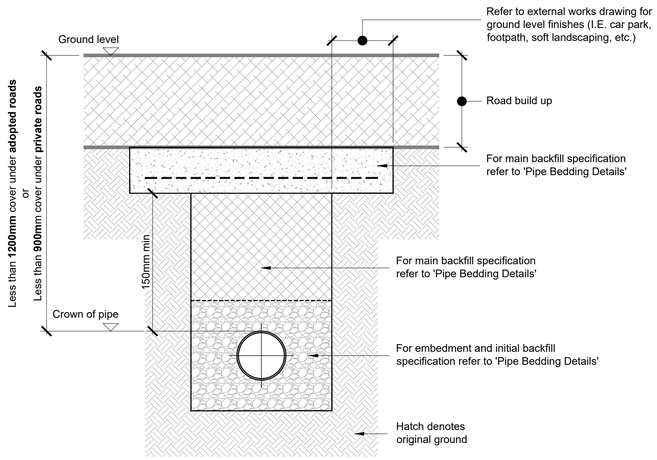

PROTECTION FOR PIPES LAID AT SHALLOW DEPTHS IN TRAFFICKED AREAS - (OPTION 1)
(N.B INFORMATION SHOWN HAS BEEN TAKEN FROM 'BS EN 8301:1985 - CLAUSE 11.1.2')
SCALE 1:10

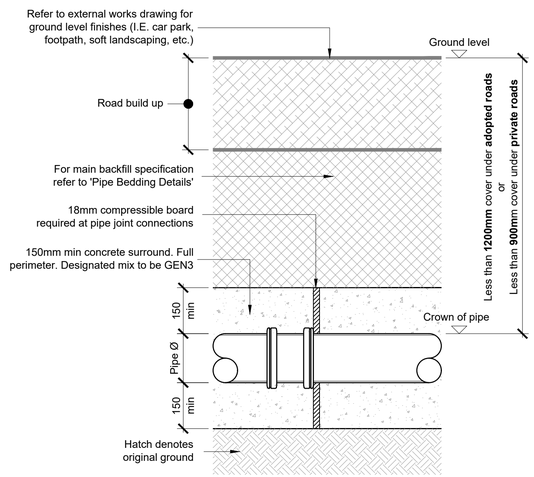

FLEXIBLE JOINT DETAIL FOR CONCRETE BED AND CONCRETE SURROUND SPIGOT AND SOCKET PIPES
SCALE 1:10

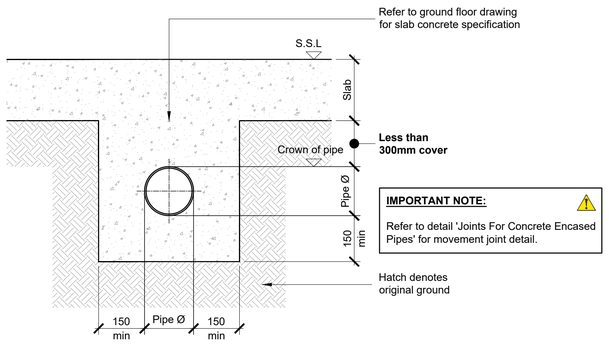

IMPORTANT NOTE:

Refer to detail 'Joints For Concrete Encased Pipes' for movement joint detail.

PROTECTION FOR PIPES WITHIN 300mm OF SLAB CONSTRUCTION
(N.B INFORMATION SHOWN HAS BEEN TAKEN FROM 'BS EN 8301:1985 - CLAUSE 11.1.2')
SCALE 1:10

NOTES:

1. Do not scale from this drawing.
2. This drawing is copyright and is sent to you in confidence. It must not be copied, used or disclosed, in whole or in part, to third parties without written permission. It remains the property of Booth King Partnership Ltd. (BKPL) and must be returned on request.
3. This drawing is to be read in conjunction with all relevant contractual documents.
4. Anyone using this drawing must be aware of their legal duties under the CDM Regulations 2015, refer to the HSE website for further information. BKPL are not Principal Designers.
5. All dimensions shown on this drawing are in millimeters unless noted otherwise.
6. If the Contractor consider that they do not have sufficient information to safely complete the works detailed on this drawing, they should contact the Engineer.
7. This document uses revision codes in accordance with ISO EN 19650:
   P. Preliminary (non-contractual) - review, comment or approval.
   C. Contractual - Approved for stage completion.
   Work in progress:
   S0 - Initial/Concept; **S1** - Suitable for Comment; **S2** - Suitable for Information; **S3** - Suitable for Review & Approval; **S4** - Suitable for Construction; **S5** - Suitable for Approval.
   Published (contractual):
   A1 - Bid; **A2** - Implementation; **A3** - Operation.
8. This document uses project stages in accordance with the IStructE Structural Fan 01 Work 2020:
   1 - Inception, **2** - Concept, **3** - Developed Design, **4.5** - Production Design, **5** - Construction, **6** - Handover.
9. Gen 3 concrete shall be used in non-aggressive ground.
10. Checks shall be undertaken on site prior to commencement of any ground works to confirm the suitability of the ground and groundwater.

DRAINAGE NOTES

1. For narrow trenching techniques the minimum trench width may be reduced providing that the design indicates that the reduced trench width is sufficient to support the pipework.
2. Embedment dimensions shall be in accordance with 'Table 2'.
3. Limestone material shall not be used where the native ground or ground water is acidic, i.e. pH of 6 or less.
4. Gen 3 concrete shall be used in non-aggressive ground.
5. Concrete surround details shall be adopted where cover to pipework is less than 1.2m and where it is necessary to protect the pipework from traffic loading.
6. Pipes to be bedded/surrounded with concrete shall be supported on precast concrete setting blocks, the top face of each block being covered with two layers of compressible packing.
7. PVC and PE pipes shall be wrapped with a layer of plastic sheeting complying with UU CESWI 6 class 2.95.
8. Compressible filler shall comply with UU CESWI 6 class 2.19.

REV.	DATE	REVISION DETAILS	INITIALS
P01	14.02.25	Issued for Tender	JDE
		CURRENT DRAWING REVISION CHECKED BY	EZ
		CURRENT DRAWING REVISION APPROVED BY	EZ

DRAWING STATUS: S4
PROJECT STAGE: Stage 4

boothking PARTNERSHIP LIMITED
CONSULTING CIVIL & STRUCTURAL ENGINEERS
www.booth-king.co.uk office@booth-king.co.uk
RAMSBOTTOM Tel: 01706 822 022 | **MANCHESTER** Tel: 0161 694 7087 | **EDINBURGH** Tel: 0131 229 1547

PROJECT:
Oldham Road, Rochdale Development

TITLE:
Phase 1 Drainage Details Sheet 3

SCALE (A1)	AUTHOR	DATE	REVISION	BKPL No.
N/A	JDE	Feb '25	P01	14251

DRAWING REF:
ORDD-BKP-ZZ-XX-DR-C-00573

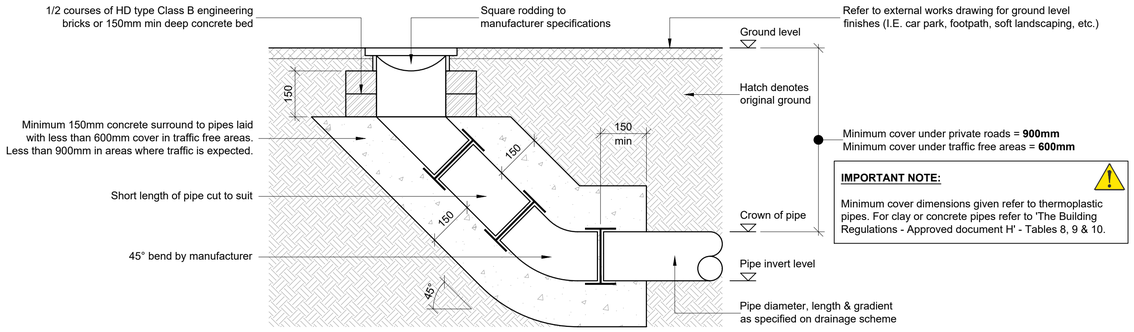

IMPORTANT NOTE:

Minimum cover dimensions given refer to thermoplastic pipes. For clay or concrete pipes refer to 'The Building Regulations - Approved document H' - Tables 8, 9 & 10.

RODDING EYE DETAIL

SCALE 1:10

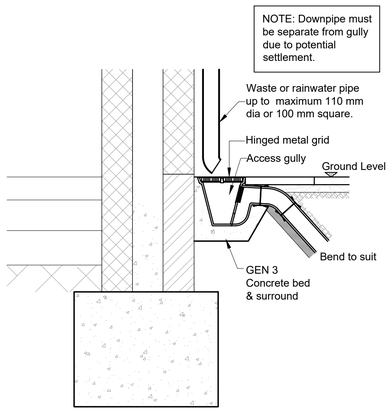

ACCESS GULLY DETAIL

SCALE 1:20

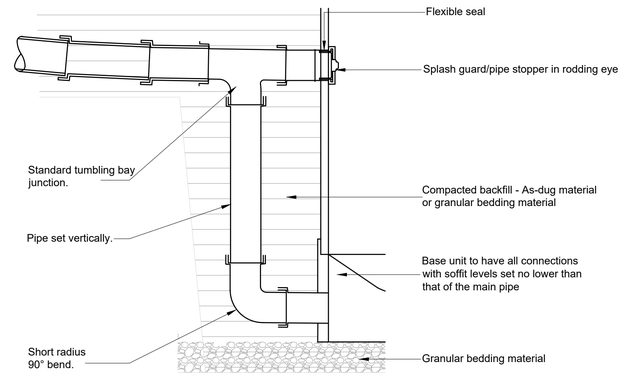

TYPICAL BACKDROP DETAIL

SCALE 1:20

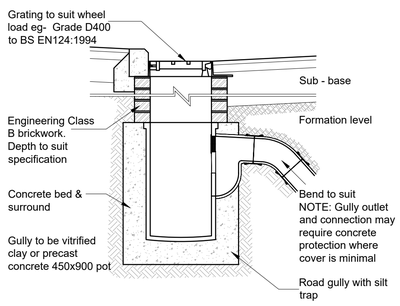

GULLY DETAIL

SCALE 1:20

NOTE:
The depth of the gully can be increased by up to 300 mm by fitting a 225 mm coupling code VC1/3 and a 300 mm high raising piece code SIC3/1 between the frame and the gully body.

YARD GULLY DETAIL

SCALE 1:20

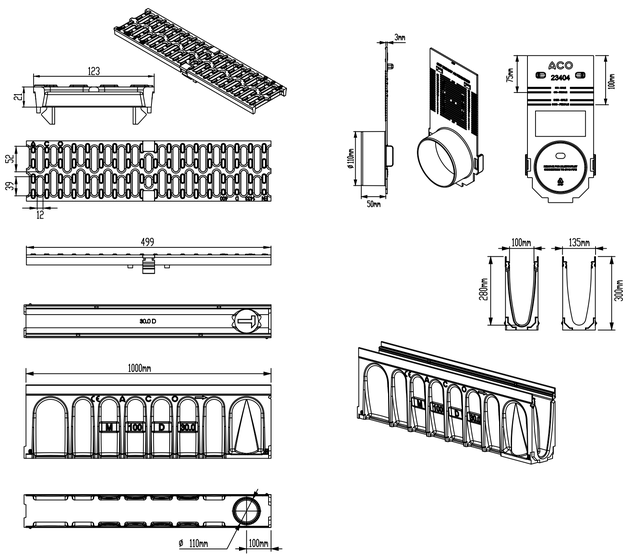

ACO MULTIDRAIN MD 100-30

NOT TO SCALE

NOTES:

1. Do not scale from this drawing.
2. This drawing is copyright and is sent to you in confidence. It must not be copied, used or disclosed, in whole or in part, to third parties without written permission. It remains the property of Booth King Partnership Ltd. (BKPL) and must be returned on request.
3. This drawing is to be read in conjunction with all relevant contractual documents.
4. Anyone using this drawing must be aware of their legal duties under the CDM Regulations 2015, refer to the HSE website for further information. BKPL are not Principal Designers.
5. All dimensions shown on this drawing are in millimeters unless noted otherwise.
6. If the Contractor consider that they do not have sufficient information to safely complete the works detailed on this drawing, they should contact the Engineer.
7. This document uses revision codes in accordance with ISO EN 19650:
   P. Preliminary (non-contractual) - review, comment or approval.
   C. Contractual - Approved for stage completion.
8. This document uses status codes in accordance with ISO EN 19650:
   Work in progress:
   S0 - WIP
   Shared (non-contractual):
   S1 - Coordination, **S2** - Information, **S3** - Review, **S4** & **S5** - Approval.
   Published (contractual):
   A1, **An**, etc. (where "n" relates to the project stage)
9. This document uses project stages in accordance with the IStructE Structural Plan of Work 2020:
   2 - Concept, **3** - Coordination, **4** - Technical Design,
   4.5 - Production Design, **5** - Construction, **6** - Handover.
10. Only documents with a revision code C# (where '#' relates to a revision number) and status code A4 or A5 are suitable for construction. Any deviations to that which is on site is not the liability of BKPL.

REV.	DATE	REVISION DETAILS	INITIALS
P01	14.02.25	Issued for Tender	JDE
		CURRENT DRAWING REVISION CHECKED BY	EZ
		CURRENT DRAWING REVISION APPROVED BY	EZ

DRAWING STATUS: S4

PROJECT STAGE: Stage 4

boothking PARTNERSHIP LIMITED

CONSULTING CIVIL & STRUCTURAL ENGINEERS

www.booth-king.co.uk office@booth-king.co.uk

RAMSBOTTOM Tel: 01706 822 022 | **MANCHESTER** Tel: 0161 694 7087 | **EDINBURGH** Tel: 0131 229 1547

PROJECT: Oldham Road, Rochdale Development

TITLE: Phase 1 Drainage Details Sheet 4

SCALE (A1)	AUTHOR	DATE	REVISION	BKPL No.
N/A	JDE	Feb '25	P01	14251

DRAWING REF: ORDD-BKP-ZZ-XX-DR-C-00574

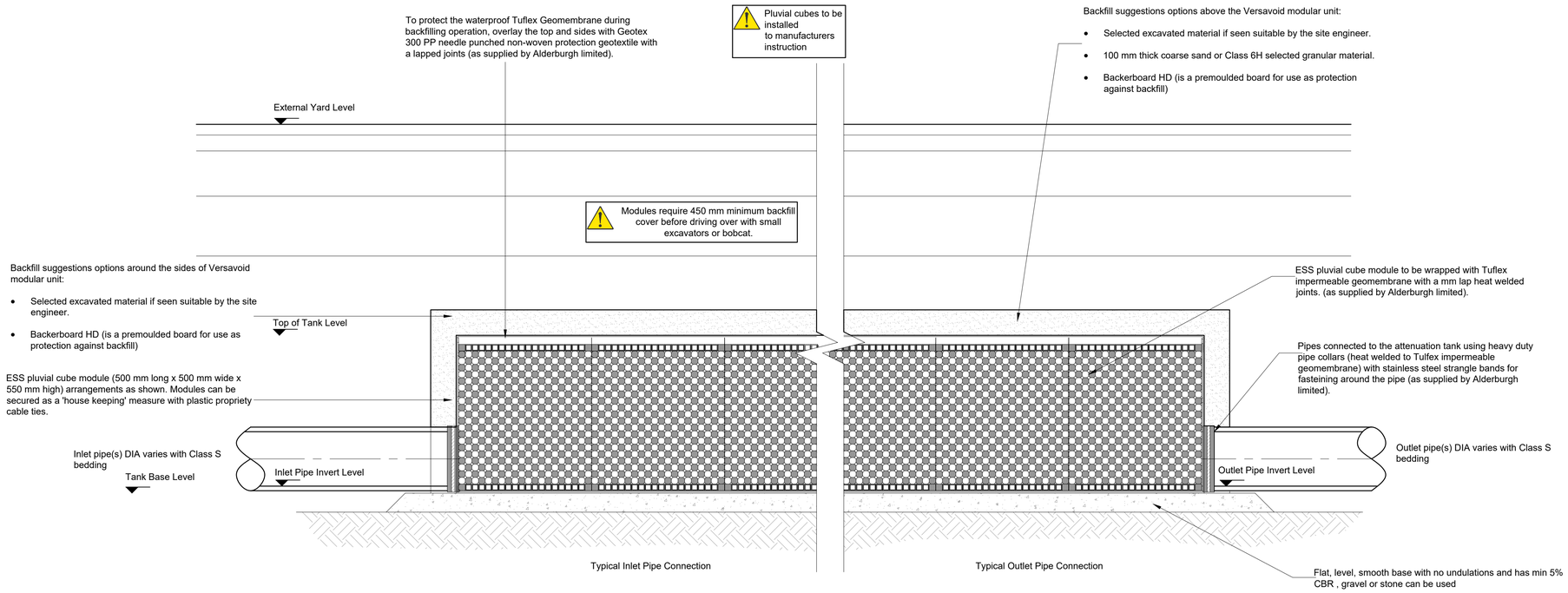

TYPICAL DETAILS OF ATTENUATION TANK USING PLUVIAL CUBE MODULE UNITS

SCALE 1:10

NOTES:

1. Do not scale from this drawing.
2. This drawing is copyright and is sent to you in confidence. It must not be copied, used or disclosed, in whole or in part, to third parties without written permission. It remains the property of Booth King Partnership Ltd. (BKPL) and must be returned on request.
3. This drawing is to be read in conjunction with all relevant contractual documents.
4. Anyone using this drawing must be aware of their legal duties under the CDM Regulations 2015, refer to the HSE website for further information. BKPL are not Principal Designers.
5. All dimensions shown on this drawing are in millimeters unless noted otherwise.
6. If the Contractor consider that they do not have sufficient information to safely complete the works detailed on this drawing, they should contact the Engineer.
7. This document uses revision codes in accordance with ISO EN 19650:
   P. Preliminary (non-contractual) - review, comment or approval.
   C. Contractual - Approved for stage completion.
8. This document uses status codes in accordance with ISO EN 19650:
   Work in progress:
   S0 - WIP
   Shared (non-contractual):
   S1 - Coordination, **S2** - Information, **S3** - Review, **S4** & **S5** - Approval.
   Published (contractual):
   A1, **An**, etc. (where "n" relates to the project stage)
9. This document uses project stages in accordance with the IStructE Structural Plan of Work 2020:
   2 - Concept, **3** - Coordination, **4** - Technical Design,
   4.5 - Production Design, **5** - Construction, **6** - Handover.
10. Only documents with a revision code C# (where '#' relates to a revision number) and status code A4 or A5 are suitable for construction. Any deviations to that which is on site is not the liability of BKPL.

REV.	DATE	REVISION DETAILS	INITIALS
P01	14.02.25	Issued for Tender	JDE
		CURRENT DRAWING REVISION CHECKED BY	EZ
		CURRENT DRAWING REVISION APPROVED BY	EZ

DRAWING STATUS: S4

PROJECT STAGE: Stage 4

boothking PARTNERSHIP LIMITED

CONSULTING CIVIL & STRUCTURAL ENGINEERS

www.booth-king.co.uk office@booth-king.co.uk

RAMSBOTTOM Tel: 01706 822 022 | **MANCHESTER** Tel: 0161 694 7087 | **EDINBURGH** Tel: 0131 229 1547

PROJECT:

Oldham Road,
Rochdale Development

TITLE:

Phase 1
Drainage
Details Sheet 5

SCALE (A1)	AUTHOR	DATE	REVISION	BKPL No.
N/A	JDE	Feb '25	P01	14251

DRAWING REF:

ORDD-BKP-ZZ-XX-DR-C-00575

APPENDIX D

SURFACE WATER CALCULATIONS

Design Settings

Rainfall Methodology	FSR	Maximum Time of Concentration (mins)	30.00
Return Period (years)	1	Maximum Rainfall (mm/hr)	50.0
Additional Flow (%)	0	Minimum Velocity (m/s)	1.00
FSR Region	England and Wales	Connection Type	Level Soffits
M5-60 (mm)	20.000	Minimum Backdrop Height (m)	0.200
Ratio-R	0.300	Preferred Cover Depth (m)	1.200
CV	0.750	Include Intermediate Ground	✓
Time of Entry (mins)	5.00	Enforce best practice design rules	x

Nodes

Name	Area (ha)	T of E (mins)	Cover Level (m)	Diameter (mm)	Easting (m)	Northing (m)	Depth (m)
RE1		5.00	140.500	150	389875.244	412908.577	0.930
S1	0.014	5.00	140.500	450	389892.952	412890.436	1.100
RE2		5.00	140.500	150	389883.519	412916.610	0.880
S2	0.014	5.00	140.400	450	389901.205	412898.492	1.200
MHS100			140.065	1500	389914.008	412904.899	1.365
RE3		5.00	140.500	150	389902.215	412933.829	0.700
S3	0.007	5.00	140.500	450	389891.539	412923.408	0.800
S4			140.500	450	389899.982	412914.759	1.000
RE4		5.00	140.500	150	389903.384	412934.974	0.800
S5	0.011	5.00	140.500	450	389919.284	412950.494	0.950
S6			140.300	450	389927.732	412941.846	0.950
S7	0.018	5.00	140.500	450	389919.698	412934.004	1.450
MHS101	0.037	5.00	140.150	1500	389931.161	412922.254	1.700
S8	0.017	5.00	139.750	600	389894.681	412959.044	1.020
MHS c	0.115	5.00	139.700	2100	389906.331	412967.890	1.120
MHS 900	0.000	5.00	140.100	1500	389918.202	412981.937	1.710
MHS 901	0.000	5.00	139.900	1500	389955.915	413033.774	2.190
MHS200	0.038	5.00	140.200	1500	389923.478	412954.031	1.700
RE5		5.00	140.150	150	389976.441	412924.922	0.720
S9	0.021	5.00	140.150	450	389952.293	412949.673	1.150
RE6		5.00	140.150	150	389968.413	412917.354	0.710
S10			140.150	450	389944.395	412941.959	1.300
S11	0.021	5.00	140.200	450	389947.805	412938.466	1.450
RE7		5.00	140.400	150	389978.383	412873.889	0.630
S12	0.005	5.00	140.400	450	389971.511	412880.929	0.750
S13			140.400	450	389979.493	412888.720	0.890
S14	0.005	5.00	140.400	450	389982.376	412885.766	0.960
MHS300	0.017	5.00	140.065	1200	389986.325	412889.621	1.515
MHS102	0.043	5.00	140.200	1500	389943.115	412933.888	1.900
MHS103	0.052	5.00	140.200	1500	389966.585	412909.844	2.200
MHS104	0.088	5.00	140.000	1500	389992.223	412934.870	2.450
RE8		5.00	140.200	150	389979.428	412906.819	0.880
S15	0.025	5.00	140.200	450	390016.957	412943.452	1.300
RE9		5.00	140.200	150	389987.177	412898.881	1.100
S16	0.043	5.00	140.200	450	390024.736	412935.483	1.450
MHS500	0.036	5.00	139.680	1200	390030.296	412920.826	2.080
MHS501			139.980	1200	390030.471	412941.347	2.590
MHS106	0.021	5.00	140.150	1500	390015.431	412956.756	3.050
S17		5.00	139.800	450	390018.823	413025.748	1.100
S18			139.800	450	390009.145	413020.394	1.240
RE10		5.00	139.800	150	390019.297	413024.974	1.100

Flow+ v12.0 Copyright © 1988-2025 Causeway Technologies Ltd

Nodes

Name	Area (ha)	T of E (mins)	Cover Level (m)	Diameter (mm)	Easting (m)	Northing (m)	Depth (m)
S19	0.026	5.00	139.800	450	390044.460	412979.743	1.750
S20	0.026	5.00	139.800	450	390034.705	412974.317	1.890
RE11		5.00	140.050	150	390046.964	412962.799	0.600
S21	0.009	5.00	140.050	450	390031.953	412948.146	0.950
S22			140.050	450	390023.786	412956.513	1.150
RE12		5.00	140.050	150	390038.623	412970.996	1.110
S23	0.009	5.00	140.050	450	390028.245	412960.866	1.350
MHS107			139.900	1500	390019.378	412964.480	2.970
RE13		5.00	140.200	150	389950.255	412961.725	0.750
S24	0.014	5.00	140.200	450	389937.700	412949.470	0.900
S25			140.200	450	389929.853	412957.510	1.000
S26	0.018	5.00	140.200	450	389945.847	412973.122	1.300
MHS400			140.100	1200	389951.375	412987.262	1.600
S32	0.028	5.00	139.750	600	389925.569	413025.800	1.110
MHS a	0.044	5.00	139.700	1500	389961.420	413051.158	1.800
MHS b	0.068	5.00	139.700	1500	389950.226	413017.319	1.810
MHS 902			140.000	1500	389964.610	413030.729	2.390
AT Phase 1			140.000	1	389978.770	413035.920	2.500
MHS 903	0.040	5.00	140.000	1800	389979.866	413045.489	2.560
S36A	0.029	5.00	137.620	1200	389961.677	413068.938	1.120
S36B	0.022	5.00	137.650	1200	389989.046	413061.669	1.330
MHS401	0.048	5.00	139.950	1500	389963.816	412999.496	1.620
MHS402			139.950	1200	389973.475	412999.743	1.700
RE14		5.00	140.200	150	389947.559	412975.455	0.670
S27	0.014	5.00	140.150	450	389966.231	412993.681	0.950
RE15		5.00	140.400	150	389951.109	412962.727	0.890
S28	0.017	5.00	140.150	450	389974.325	412985.389	1.050
RE16		5.00	140.200	150	390000.092	412945.440	0.510
S29			140.200	450	389975.511	412970.623	0.950
S30			140.100	450	389982.284	412977.235	1.100
RE17		5.00	140.200	150	390008.017	412953.022	0.860
S31			140.100	450	389983.359	412978.284	1.200
MHS403	0.043	5.00	140.155	1200	389989.882	412982.934	2.055
MHS108			139.980	1800	389995.858	412988.763	3.360
S33		5.00	140.000	450	389994.680	413041.240	1.900
S34	0.020	5.00	140.000	450	389973.341	413004.637	2.320
RE18		5.00	140.000	150	390004.619	413034.790	1.910
S35	0.020	5.00	140.000	450	389983.328	412998.844	2.430
Attenuation Tank	0.071	5.00	139.980	10	390009.150	412983.469	3.280
MHS109			139.920	1200	389968.940	413004.456	3.560
MHS109A			140.000	1200	389973.065	413052.446	3.900
MHS110			137.650	1200	389974.248	413066.187	1.600
MHD204			138.000	1200	389972.565	413067.929	2.022
RE19		5.00	140.400	150	389969.489	412898.951	0.800
S37	0.018	5.00	140.400	450	389944.930	412924.112	1.050
RE20		5.00	140.400	150	389961.517	412891.162	1.070
S38	0.018	5.00	140.400	450	389936.946	412916.334	1.300

Flow+ v12.0 Copyright © 1988-2025 Causeway Technologies Ltd

Simulation Settings

Rainfall Methodology	FSR	Skip Steady State	x
Rainfall Events	Singular	Drain Down Time (mins)	240
FSR Region	England and Wales	Additional Storage (m³/ha)	0.0
M5-60 (mm)	20.000	Starting Level (m)	
Ratio-R	0.300	Check Discharge Rate(s)	x
Summer CV	0.750	Check Discharge Volume	✓
Winter CV	0.840	100 year 360 minute (m³)	
Analysis Speed	Normal		

Storm Durations

15	30	60	120	180	240	360	480	600	720	960	1440

Return Period (years)	Climate Change (CC %)	Additional Area (A %)	Additional Flow (Q %)
1	0	0	0
30	0	0	0
30	40	0	0
100	0	0	0
100	20	0	0
100	30	0	0
100	45	0	0

Pre-development Discharge Volume

Site Makeup	Greenfield	Return Period (years)	100
Greenfield Method	FSR/FEH	Climate Change (%)	0
Positively Drained Area (ha)		Storm Duration (mins)	360
Soil Index	1	Betterment (%)	0
SPR	0.10	PR	
CWI		Runoff Volume (m³)	

Node MHS108 Online Hydro-Brake® Control

Flap Valve	x	Objective	(HE) Minimise upstream storage
Replaces Downstream Link	x	Sump Available	✓
Invert Level (m)	136.620	Product Number	CTL-SHE-0163-1700-2500-1700
Design Depth (m)	2.500	Min Outlet Diameter (m)	0.225
Design Flow (l/s)	17.0	Min Node Diameter (mm)	1800

Node MHS 903 Online Hydro-Brake® Control

Flap Valve	x	Objective	(HE) Minimise upstream storage
Replaces Downstream Link	x	Sump Available	✓
Invert Level (m)	137.440	Product Number	CTL-SHE-0088-4000-1500-4000
Design Depth (m)	1.500	Min Outlet Diameter (m)	0.100
Design Flow (l/s)	4.0	Min Node Diameter (mm)	1200

Node S36A Online Orifice Control

Flap Valve	x	Design Depth (m)	1.000	Discharge Coefficient	0.600
Replaces Downstream Link	x	Design Flow (l/s)	1.0		
Invert Level (m)	136.500	Diameter (m)	0.021		

Flow+ v12.0 Copyright © 1988-2025 Causeway Technologies Ltd

Node S36B Online Orifice Control

Flap Valve	x	Design Depth (m)	1.000	Discharge Coefficient	0.600
Replaces Downstream Link	x	Design Flow (l/s)	0.6		
Invert Level (m)	136.320	Diameter (m)	0.016		

Node MHS108 Depth/Area Storage Structure

Base Inf Coefficient (m/hr)	0.00000	Safety Factor	2.0	Invert Level (m)	137.000
Side Inf Coefficient (m/hr)	0.00000	Porosity	0.97	Time to half empty (mins)	

Depth (m)	Area (m²)	Inf Area (m²)	Depth (m)	Area (m²)	Inf Area (m²)	Depth (m)	Area (m²)	Inf Area (m²)
0.000	225.0	0.0	1.500	225.0	0.0	1.501	0.0	0.0

Node AT Phase 1 Depth/Area Storage Structure

Base Inf Coefficient (m/hr)	0.00000	Safety Factor	2.0	Invert Level (m)	137.500
Side Inf Coefficient (m/hr)	0.00000	Porosity	0.97	Time to half empty (mins)	

Depth (m)	Area (m²)	Inf Area (m²)	Depth (m)	Area (m²)	Inf Area (m²)	Depth (m)	Area (m²)	Inf Area (m²)
0.000	125.0	125.0	1.500	125.0	184.4	1.501	0.0	184.4

Node S36A Depth/Area Storage Structure

Base Inf Coefficient (m/hr)	0.00000	Safety Factor	2.0	Invert Level (m)	136.500
Side Inf Coefficient (m/hr)	0.00000	Porosity	0.95	Time to half empty (mins)	312

Depth (m)	Area (m²)	Inf Area (m²)	Depth (m)	Area (m²)	Inf Area (m²)	Depth (m)	Area (m²)	Inf Area (m²)
0.000	30.0	0.0	0.500	30.0	0.0	0.501	0.0	0.0

Node S36B Depth/Area Storage Structure

Base Inf Coefficient (m/hr)	0.00000	Safety Factor	2.0	Invert Level (m)	136.320
Side Inf Coefficient (m/hr)	0.00000	Porosity	0.95	Time to half empty (mins)	

Depth (m)	Area (m²)	Inf Area (m²)	Depth (m)	Area (m²)	Inf Area (m²)	Depth (m)	Area (m²)	Inf Area (m²)
0.000	25.0	0.0	0.500	25.0	0.0	0.501	0.0	0.0

Flow+ v12.0 Copyright © 1988-2025 Causeway Technologies Ltd

Results for 1 year Critical Storm Duration. Lowest mass balance: 99.10%

Node Event	US Node	Peak (mins)	Level (m)	Depth (m)	Inflow (l/s)	Node Vol (m³)	Flood (m³)	Status
15 minute summer	RE1	1	139.570	0.000	0.0	0.0000	0.0000	OK
15 minute winter	S1	10	139.428	0.028	1.8	0.0044	0.0000	OK
15 minute summer	RE2	1	139.620	0.000	0.0	0.0000	0.0000	OK
15 minute winter	S2	10	139.233	0.033	3.6	0.0053	0.0000	OK
15 minute winter	MHS100	11	138.736	0.036	3.5	0.0638	0.0000	OK
15 minute summer	RE3	1	139.800	0.000	0.0	0.0000	0.0000	OK
15 minute summer	S3	10	139.720	0.020	0.9	0.0032	0.0000	OK
15 minute winter	S4	11	139.520	0.020	0.9	0.0032	0.0000	OK
15 minute summer	RE4	1	139.700	0.000	0.0	0.0000	0.0000	OK
15 minute winter	S5	10	139.576	0.026	1.4	0.0041	0.0000	OK
15 minute winter	S6	11	139.372	0.022	1.4	0.0035	0.0000	OK
15 minute winter	S7	11	139.087	0.037	4.4	0.0058	0.0000	OK
15 minute winter	MHS101	11	138.534	0.084	16.9	0.1484	0.0000	OK
15 minute winter	S8	10	138.761	0.031	2.2	0.0088	0.0000	OK
15 minute winter	MHS c	10	138.661	0.081	16.9	0.2813	0.0000	OK
15 minute winter	MHS 900	11	138.467	0.077	16.6	0.1352	0.0000	OK
15 minute winter	MHS 901	11	137.817	0.107	33.7	0.1894	0.0000	OK
15 minute winter	MHS200	10	138.546	0.046	4.9	0.0807	0.0000	OK
15 minute summer	RE5	1	139.430	0.000	0.0	0.0000	0.0000	OK
15 minute winter	S9	10	139.044	0.044	2.7	0.0070	0.0000	OK
15 minute summer	RE6	1	139.440	0.000	0.0	0.0000	0.0000	OK
15 minute winter	S10	11	138.890	0.040	2.6	0.0064	0.0000	OK
15 minute winter	S11	11	138.789	0.039	5.2	0.0062	0.0000	OK
15 minute summer	RE7	1	139.770	0.000	0.0	0.0000	0.0000	OK
15 minute summer	S12	11	139.671	0.021	0.6	0.0033	0.0000	OK

Link Event (Outflow)	US Node	Link	DS Node	Outflow (l/s)	Velocity (m/s)	Flow/Cap	Link Vol (m³)	Discharge Vol (m³)
15 minute summer	RE1	1.000	S1	0.0	0.000	0.000	0.0273	
15 minute winter	S1	1.001	S2	1.8	0.687	0.075	0.0295	
15 minute summer	RE2	2.000	S2	0.0	0.000	0.000	0.0275	
15 minute winter	S2	1.002	MHS100	3.5	1.159	0.105	0.0437	
15 minute winter	MHS100	1.003	MHS101	3.5	0.350	0.031	0.2551	
15 minute summer	RE3	3.000	S3	0.0	0.000	0.000	0.0107	
15 minute summer	S3	3.001	S4	0.9	0.632	0.038	0.0166	
15 minute winter	S4	3.002	S7	0.8	0.371	0.037	0.0645	
15 minute summer	RE4	4.000	S5	0.0	0.000	0.000	0.0217	
15 minute winter	S5	4.001	S6	1.4	0.757	0.059	0.0217	
15 minute winter	S6	4.002	S7	1.4	0.561	0.046	0.0276	
15 minute winter	S7	4.003	MHS101	4.4	0.669	0.130	0.1104	
15 minute winter	MHS101	1.004	MHS102	16.9	0.821	0.161	0.3459	
15 minute winter	S8	5.000	MHS c	2.2	0.282	0.041	0.1184	
15 minute winter	MHS c	5.001	MHS 900	16.6	1.138	0.147	0.2686	
15 minute winter	MHS 900	5.002	MHS b	16.5	0.897	0.145	0.8833	
15 minute winter	MHS 901	5.004	MHS 902	33.8	1.113	0.100	0.2820	
15 minute winter	MHS200	30.000	MHS102	4.8	0.324	0.051	0.4504	
15 minute summer	RE5	6.000	S9	0.0	0.000	0.000	0.0555	
15 minute winter	S9	6.001	S10	2.6	0.841	0.367	0.0342	
15 minute summer	RE6	7.000	S11	0.0	0.000	0.000	0.0408	
15 minute winter	S10	6.002	S11	2.6	0.905	0.301	0.0141	
15 minute winter	S11	6.003	MHS102	5.2	0.823	0.323	0.0350	
15 minute summer	RE7	8.000	S12	0.0	0.000	0.000	0.0058	
15 minute summer	S12	8.001	S13	0.6	0.573	0.089	0.0118	

Flow+ v12.0 Copyright © 1988-2025 Causeway Technologies Ltd

Results for 1 year Critical Storm Duration. Lowest mass balance: 99.10%

Node Event	US Node	Peak (mins)	Level (m)	Depth (m)	Inflow (l/s)	Node Vol (m³)	Flood (m³)	Status
15 minute summer	S13	11	139.528	0.018	0.6	0.0028	0.0000	OK
15 minute summer	S14	11	139.454	0.014	1.2	0.0022	0.0000	OK
15 minute winter	MHS300	11	138.583	0.033	3.4	0.0369	0.0000	OK
15 minute winter	MHS102	11	138.417	0.117	32.0	0.2063	0.0000	OK
15 minute winter	MHS103	11	138.121	0.121	41.6	0.2140	0.0000	OK
15 minute winter	MHS104	11	137.684	0.134	51.8	0.2370	0.0000	OK
15 minute summer	RE8	1	139.320	0.000	0.0	0.0000	0.0000	OK
15 minute winter	S15	11	138.941	0.041	3.2	0.0065	0.0000	OK
15 minute summer	RE9	1	139.100	0.000	0.0	0.0000	0.0000	OK
15 minute winter	S16	10	138.785	0.034	8.6	0.0055	0.0000	OK
15 minute winter	MHS500	10	137.644	0.044	4.6	0.0502	0.0000	OK
15 minute winter	MHS501	11	137.460	0.070	13.0	0.0792	0.0000	OK
15 minute winter	MHS106	11	137.244	0.144	66.6	0.2546	0.0000	OK
15 minute summer	S17	1	138.700	0.000	0.0	0.0000	0.0000	OK
15 minute summer	S18	1	138.560	0.000	0.0	0.0000	0.0000	OK
15 minute summer	RE10	1	138.700	0.000	0.0	0.0000	0.0000	OK
15 minute winter	S19	10	138.092	0.042	3.3	0.0067	0.0000	OK
15 minute winter	S20	11	137.950	0.040	6.5	0.0063	0.0000	OK
15 minute summer	RE11	1	139.450	0.000	0.0	0.0000	0.0000	OK
15 minute winter	S21	10	139.127	0.027	1.2	0.0043	0.0000	OK
15 minute winter	S22	11	138.924	0.024	1.2	0.0038	0.0000	OK
15 minute summer	RE12	1	138.940	0.000	0.0	0.0000	0.0000	OK
15 minute winter	S23	10	138.718	0.018	2.3	0.0028	0.0000	OK
60 minute winter	MHS107	54	137.216	0.286	45.2	0.5055	0.0000	OK
15 minute summer	RE13	1	139.450	0.000	0.0	0.0000	0.0000	OK

Link Event (Outflow)	US Node	Link	DS Node	Outflow (l/s)	Velocity (m/s)	Flow/Cap	Link Vol (m³)	Discharge Vol (m³)
15 minute summer	S13	8.002	S14	0.6	0.620	0.026	0.0040	
15 minute summer	S14	8.003	MHS300	1.2	0.710	0.017	0.0098	
15 minute winter	MHS300	8.004	MHS103	3.3	0.303	0.046	0.3576	
15 minute winter	MHS102	1.005	MHS103	32.0	1.233	0.305	0.8731	
15 minute winter	MHS103	1.006	MHS104	41.2	1.448	0.330	1.0229	
15 minute winter	MHS104	1.007	MHS106	51.3	1.607	0.388	1.0195	
15 minute summer	RE8	9.000	S15	0.0	0.000	0.000	0.0990	
15 minute winter	S15	9.001	S16	3.1	0.889	0.149	0.0387	
15 minute summer	RE9	10.000	S16	0.0	0.000	0.000	0.0770	
15 minute winter	S16	9.002	MHS501	8.4	1.560	0.116	0.0455	
15 minute winter	MHS500	11.000	MHS501	4.5	0.574	0.086	0.1635	
15 minute winter	MHS501	9.003	MHS106	12.9	0.733	0.213	0.4023	
15 minute winter	MHS106	1.008	MHS107	66.0	1.583	0.235	0.3830	
15 minute summer	S17	12.000	S18	0.0	0.000	0.000	0.0000	
15 minute summer	S18	12.001	S20	0.0	0.000	0.000	0.0960	
15 minute summer	RE10	13.000	S19	0.0	0.000	0.000	0.1018	
15 minute winter	S19	13.001	S20	3.2	0.820	0.160	0.0433	
15 minute winter	S20	13.002	MHS107	6.4	0.790	0.153	0.1943	
15 minute summer	RE11	14.000	S21	0.0	0.000	0.000	0.0166	
15 minute winter	S21	14.001	S22	1.2	0.756	0.145	0.0179	
15 minute winter	S22	14.002	S23	1.2	0.992	0.106	0.0073	
15 minute summer	RE12	15.000	S23	0.0	0.000	0.000	0.0064	
15 minute winter	S23	14.003	MHS107	2.3	0.554	0.029	0.0899	
15 minute winter	MHS107	1.009	MHS108	73.8	0.818	0.385	2.9396	
15 minute summer	RE13	16.000	S24	0.0	0.000	0.000	0.0253	

Flow+ v12.0 Copyright © 1988-2025 Causeway Technologies Ltd

Results for 1 year Critical Storm Duration. Lowest mass balance: 99.10%

Node Event	US Node	Peak (mins)	Level (m)	Depth (m)	Inflow (l/s)	Node Vol (m³)	Flood (m³)	Status
15 minute winter	S24	10	139.334	0.034	1.8	0.0054	0.0000	OK
15 minute winter	S25	11	139.230	0.030	1.8	0.0047	0.0000	OK
15 minute winter	S26	11	138.938	0.038	4.0	0.0060	0.0000	OK
15 minute winter	MHS400	11	138.542	0.042	4.0	0.0477	0.0000	OK
15 minute winter	S32	11	138.692	0.052	3.6	0.0147	0.0000	OK
15 minute winter	MHS a	10	137.945	0.045	5.6	0.0790	0.0000	OK
15 minute winter	MHS b	11	137.998	0.108	28.2	0.1912	0.0000	OK
15 minute summer	MHS 902	10	137.727	0.117	32.4	0.2063	0.0000	OK
180 minute winter	AT Phase 1	136	137.711	0.211	10.4	25.5326	0.0000	OK
180 minute winter	MHS 903	136	137.711	0.271	6.6	0.6906	0.0000	SURCHARGED
360 minute winter	S36A	256	136.610	0.110	0.7	3.2700	0.0000	OK
480 minute winter	S36B	344	136.433	0.113	0.5	2.8217	0.0000	OK
15 minute winter	MHS401	11	138.420	0.090	9.9	0.1588	0.0000	OK
15 minute winter	MHS402	11	138.322	0.072	9.9	0.0816	0.0000	OK
15 minute summer	RE14	1	139.530	0.000	0.0	0.0000	0.0000	OK
15 minute winter	S27	10	139.233	0.033	1.8	0.0052	0.0000	OK
15 minute summer	RE15	1	139.510	0.000	0.0	0.0000	0.0000	OK
15 minute winter	S28	11	139.153	0.052	3.9	0.0083	0.0000	OK
15 minute summer	RE16	1	139.690	0.000	0.0	0.0000	0.0000	OK
15 minute summer	S29	1	139.250	0.000	0.0	0.0000	0.0000	OK
15 minute winter	S30	11	139.035	0.035	3.9	0.0056	0.0000	OK
15 minute summer	RE17	1	139.340	0.000	0.0	0.0000	0.0000	OK
15 minute winter	S31	11	138.927	0.027	3.9	0.0042	0.0000	OK

Link Event (Outflow)	US Node	Link	DS Node	Outflow (l/s)	Velocity (m/s)	Flow/Cap	Link Vol (m³)	Discharge Vol (m³)
15 minute winter	S24	16.001	S25	1.8	0.653	0.105	0.0304	
15 minute winter	S25	16.002	S26	1.8	0.595	0.085	0.0661	
15 minute winter	S26	16.003	MHS400	4.0	1.063	0.138	0.0570	
15 minute winter	MHS400	16.004	MHS401	4.0	0.413	0.077	0.1737	
15 minute winter	S32	17.000	MHS b	3.5	0.651	0.251	0.1394	
15 minute winter	MHS a	31.000	MHS 901	5.5	0.484	0.049	0.2643	
15 minute winter	MHS b	5.003	MHS 901	28.4	1.248	0.251	0.3957	
15 minute winter	MHS 902	5.005	AT Phase 1	34.1	1.738	0.124	0.3596	
600 minute winter	AT Phase 1	5.006	MHS 903	8.8	0.230	0.034	0.5918	
180 minute winter	MHS 903	5.007	MHS109A	3.6	1.444	0.019	0.0998	
360 minute winter	S36A	32.000	MHS110	0.3	0.420	0.014	0.0088	
480 minute winter	S36B	33.000	MHS110	0.2	0.329	0.009	0.0081	
15 minute winter	MHS401	16.005	MHS402	9.9	1.015	0.611	0.0937	
15 minute winter	MHS402	16.006	MHS403	9.8	1.074	0.111	0.2199	
15 minute summer	RE14	18.000	S27	0.0	0.000	0.000	0.0355	
15 minute winter	S27	18.001	S28	1.7	0.426	0.105	0.0482	
15 minute summer	RE15	19.000	S28	0.0	0.000	0.000	0.0857	
15 minute winter	S28	18.002	S30	3.9	0.908	0.233	0.0490	
15 minute summer	RE16	20.000	S29	0.0	0.000	0.000	0.0000	
15 minute summer	S29	20.001	S30	0.0	0.000	0.000	0.0141	
15 minute winter	S30	18.003	S31	3.9	1.490	0.084	0.0039	
15 minute summer	RE17	21.000	S31	0.0	0.000	0.000	0.0357	
15 minute winter	S31	18.004	MHS403	3.9	1.313	0.068	0.0239	

Flow+ v12.0 Copyright © 1988-2025 Causeway Technologies Ltd

Results for 1 year Critical Storm Duration. Lowest mass balance: 99.10%

Node Event	US Node	Peak (mins)	Level (m)	Depth (m)	Inflow (l/s)	Node Vol (m³)	Flood (m³)	Status
15 minute winter	MHS403	11	138.141	0.041	18.9	0.0461	0.0000	OK
60 minute winter	MHS108	50	137.192	0.572	61.2	43.4969	0.0000	SURCHARGED
15 minute summer	S33	1	138.100	0.000	0.0	0.0000	0.0000	OK
15 minute winter	S34	10	137.719	0.039	2.6	0.0062	0.0000	OK
15 minute summer	RE18	1	138.090	0.000	0.0	0.0000	0.0000	OK
15 minute winter	S35	11	137.616	0.046	5.1	0.0073	0.0000	OK
60 minute winter	Attenuation Tank	50	137.193	0.492	8.2	0.0000	0.0000	SURCHARGED
60 minute winter	MHS109	51	136.462	0.102	16.3	0.1153	0.0000	OK
120 minute winter	MHS109A	92	136.228	0.127	19.9	0.1442	0.0000	OK
120 minute winter	MHS110	92	136.141	0.091	20.3	0.1027	0.0000	OK
120 minute winter	MHD204	92	136.050	0.072	20.3	0.0000	0.0000	OK
15 minute summer	RE19	1	139.600	0.000	0.0	0.0000	0.0000	OK
15 minute winter	S37	10	139.380	0.030	2.3	0.0048	0.0000	OK
15 minute summer	RE20	1	139.330	0.000	0.0	0.0000	0.0000	OK
15 minute winter	S38	10	139.130	0.030	4.6	0.0048	0.0000	OK

Link Event (Outflow)	US Node	Link	DS Node	Outflow (l/s)	Velocity (m/s)	Flow/Cap	Link Vol (m³)	Discharge Vol (m³)
15 minute winter	MHS403	16.007	MHS108	18.9	1.195	0.040	0.3178	
60 minute winter	MHS108	1.010	MHS109	16.3	0.995	0.344	0.5116	
15 minute summer	S33	22.000	S34	0.0	0.000	0.000	0.0731	
15 minute winter	S34	22.001	S35	2.5	0.612	0.143	0.0472	
15 minute summer	RE18	23.000	S35	0.0	0.000	0.000	0.0914	
15 minute winter	S35	22.002	Attenuation Tank	5.0	1.059	0.204	0.2780	
15 minute summer	Attenuation Tank	22.003	MHS108	14.6	0.472	0.176	1.0075	
60 minute winter	MHS109	1.011	MHS109A	16.3	0.808	0.429	0.9793	
120 minute winter	MHS109A	1.012	MHS110	19.9	1.041	0.638	0.2633	
120 minute winter	MHS110	1.013	MHD204	20.3	1.564	0.225	0.0315	174.2
15 minute summer	RE19	25.000	S37	0.0	0.000	0.000	0.0427	
15 minute winter	S37	25.001	S38	2.3	0.890	0.084	0.0282	
15 minute summer	RE20	26.000	S38	0.0	0.000	0.000	0.0434	
15 minute winter	S38	25.002	MHS101	4.5	0.745	0.090	0.0525	

Flow+ v12.0 Copyright © 1988-2025 Causeway Technologies Ltd

Results for 30 year Critical Storm Duration. Lowest mass balance: 99.10%

Node Event	US Node	Peak (mins)	Level (m)	Depth (m)	Inflow (l/s)	Node Vol (m³)	Flood (m³)	Status
15 minute summer	RE1	1	139.570	0.000	0.0	0.0000	0.0000	OK
15 minute winter	S1	10	139.444	0.044	4.4	0.0070	0.0000	OK
15 minute summer	RE2	1	139.620	0.000	0.0	0.0000	0.0000	OK
15 minute winter	S2	10	139.254	0.053	8.7	0.0085	0.0000	OK
15 minute winter	MHS100	11	138.756	0.056	8.6	0.0981	0.0000	OK
15 minute summer	RE3	1	139.800	0.000	0.0	0.0000	0.0000	OK
15 minute winter	S3	10	139.732	0.032	2.2	0.0051	0.0000	OK
15 minute winter	S4	11	139.531	0.031	2.2	0.0050	0.0000	OK
15 minute summer	RE4	1	139.700	0.000	0.0	0.0000	0.0000	OK
15 minute winter	S5	10	139.591	0.041	3.5	0.0066	0.0000	OK
15 minute winter	S6	11	139.385	0.035	3.4	0.0055	0.0000	OK
15 minute winter	S7	11	139.109	0.058	11.2	0.0093	0.0000	OK
15 minute winter	MHS101	11	138.592	0.142	42.0	0.2505	0.0000	OK
15 minute winter	S8	10	138.778	0.048	5.3	0.0135	0.0000	OK
15 minute winter	MHS c	10	138.714	0.134	41.3	0.4632	0.0000	OK
15 minute winter	MHS 900	11	138.512	0.122	40.8	0.2155	0.0000	OK
240 minute winter	MHS 901	232	138.098	0.388	26.1	0.6862	0.0000	OK
15 minute winter	MHS200	10	138.571	0.071	11.9	0.1254	0.0000	OK
15 minute summer	RE5	1	139.430	0.000	0.0	0.0000	0.0000	OK
15 minute winter	S9	10	139.080	0.080	6.6	0.0127	0.0000	OK
15 minute summer	RE6	1	139.440	0.000	0.0	0.0000	0.0000	OK
15 minute winter	S10	11	138.924	0.074	6.4	0.0117	0.0000	OK
15 minute winter	S11	11	138.834	0.084	12.8	0.0134	0.0000	OK
15 minute summer	RE7	1	139.770	0.000	0.0	0.0000	0.0000	OK
15 minute winter	S12	10	139.684	0.034	1.6	0.0054	0.0000	OK

Link Event (Outflow)	US Node	Link	DS Node	Outflow (l/s)	Velocity (m/s)	Flow/Cap	Link Vol (m³)	Discharge Vol (m³)
15 minute summer	RE1	1.000	S1	0.0	0.000	0.000	0.0528	
15 minute winter	S1	1.001	S2	4.3	0.869	0.184	0.0573	
15 minute summer	RE2	2.000	S2	0.0	0.000	0.000	0.0525	
15 minute winter	S2	1.002	MHS100	8.6	1.497	0.257	0.0820	
15 minute winter	MHS100	1.003	MHS101	8.5	0.424	0.076	0.5088	
15 minute summer	RE3	3.000	S3	0.0	0.000	0.000	0.0199	
15 minute winter	S3	3.001	S4	2.2	0.813	0.095	0.0323	
15 minute winter	S4	3.002	S7	2.2	0.488	0.095	0.1239	
15 minute summer	RE4	4.000	S5	0.0	0.000	0.000	0.0420	
15 minute winter	S5	4.001	S6	3.4	0.983	0.150	0.0423	
15 minute winter	S6	4.002	S7	3.4	0.731	0.117	0.0529	
15 minute winter	S7	4.003	MHS101	11.0	0.882	0.321	0.1936	
15 minute winter	MHS101	1.004	MHS102	41.9	0.982	0.398	0.7087	
15 minute winter	S8	5.000	MHS c	5.2	0.350	0.100	0.2246	
15 minute winter	MHS c	5.001	MHS 900	40.8	1.430	0.361	0.5243	
15 minute winter	MHS 900	5.002	MHS b	40.3	1.097	0.354	1.7526	
15 minute winter	MHS 901	5.004	MHS 902	83.1	1.384	0.247	0.5530	
15 minute winter	MHS200	30.000	MHS102	11.7	0.387	0.125	0.9098	
15 minute summer	RE5	6.000	S9	0.0	0.000	0.000	0.1121	
15 minute winter	S9	6.001	S10	6.4	0.996	0.902	0.0711	
15 minute summer	RE6	7.000	S11	0.0	0.000	0.000	0.0976	
15 minute winter	S10	6.002	S11	6.4	1.025	0.737	0.0322	
15 minute winter	S11	6.003	MHS102	12.7	1.630	0.792	0.0487	
15 minute summer	RE7	8.000	S12	0.0	0.000	0.000	0.0111	
15 minute winter	S12	8.001	S13	1.6	0.750	0.230	0.0233	

Flow+ v12.0 Copyright © 1988-2025 Causeway Technologies Ltd

Results for 30 year Critical Storm Duration. Lowest mass balance: 99.10%

Node Event	US Node	Peak (mins)	Level (m)	Depth (m)	Inflow (l/s)	Node Vol (m³)	Flood (m³)	Status
15 minute winter	S13	11	139.538	0.028	1.6	0.0045	0.0000	OK
15 minute winter	S14	10	139.461	0.021	3.1	0.0034	0.0000	OK
15 minute winter	MHS300	10	138.601	0.051	8.4	0.0577	0.0000	OK
15 minute winter	MHS102	11	138.508	0.208	78.6	0.3681	0.0000	OK
15 minute winter	MHS103	12	138.271	0.271	102.5	0.4787	0.0000	OK
15 minute winter	MHS104	12	138.021	0.471	122.1	0.8326	0.0000	SURCHARGED
15 minute summer	RE8	1	139.320	0.000	0.0	0.0000	0.0000	OK
15 minute winter	S15	10	138.967	0.067	7.8	0.0107	0.0000	OK
15 minute summer	RE9	1	139.100	0.000	0.0	0.0000	0.0000	OK
15 minute winter	S16	10	138.805	0.055	21.1	0.0087	0.0000	OK
120 minute winter	MHS500	114	137.752	0.152	4.1	0.1717	0.0000	OK
120 minute winter	MHS501	114	137.752	0.362	11.8	0.4092	0.0000	SURCHARGED
120 minute winter	MHS106	114	137.751	0.651	62.6	1.1511	0.0000	SURCHARGED
15 minute summer	S17	1	138.700	0.000	0.0	0.0000	0.0000	OK
15 minute summer	S18	1	138.560	0.000	0.0	0.0000	0.0000	OK
15 minute summer	RE10	1	138.700	0.000	0.0	0.0000	0.0000	OK
15 minute winter	S19	10	138.120	0.070	8.2	0.0111	0.0000	OK
15 minute winter	S20	11	137.976	0.066	16.1	0.0105	0.0000	OK
15 minute summer	RE11	1	139.450	0.000	0.0	0.0000	0.0000	OK
15 minute winter	S21	10	139.143	0.043	2.8	0.0068	0.0000	OK
15 minute winter	S22	11	138.938	0.038	2.8	0.0060	0.0000	OK
15 minute summer	RE12	1	138.940	0.000	0.0	0.0000	0.0000	OK
15 minute winter	S23	10	138.727	0.027	5.5	0.0043	0.0000	OK
120 minute winter	MHS107	114	137.751	0.821	68.4	1.4506	0.0000	SURCHARGED
15 minute summer	RE13	1	139.450	0.000	0.0	0.0000	0.0000	OK

Link Event (Outflow)	US Node	Link	DS Node	Outflow (l/s)	Velocity (m/s)	Flow/Cap	Link Vol (m³)	Discharge Vol (m³)
15 minute winter	S13	8.002	S14	1.6	0.820	0.067	0.0079	
15 minute winter	S14	8.003	MHS300	3.1	0.952	0.043	0.0188	
15 minute winter	MHS300	8.004	MHS103	8.3	0.359	0.114	0.6562	
15 minute winter	MHS102	1.005	MHS103	79.0	1.450	0.753	1.9375	
15 minute summer	MHS103	1.006	MHS104	99.8	1.643	0.801	2.2264	
15 minute winter	MHS104	1.007	MHS106	115.9	1.735	0.877	2.2464	
15 minute summer	RE8	9.000	S15	0.0	0.000	0.000	0.1949	
15 minute winter	S15	9.001	S16	7.6	1.133	0.367	0.0751	
15 minute summer	RE9	10.000	S16	0.0	0.000	0.000	0.1476	
15 minute winter	S16	9.002	MHS501	20.9	2.003	0.286	0.0957	
15 minute winter	MHS500	11.000	MHS501	11.2	0.727	0.212	0.5360	
15 minute summer	MHS501	9.003	MHS106	30.2	0.902	0.500	0.8550	
15 minute winter	MHS106	1.008	MHS107	142.7	1.682	0.508	0.9567	
15 minute summer	S17	12.000	S18	0.0	0.000	0.000	0.0000	
15 minute summer	S18	12.001	S20	0.0	0.000	0.000	0.1846	
15 minute summer	RE10	13.000	S19	0.0	0.000	0.000	0.2010	
15 minute winter	S19	13.001	S20	7.9	1.040	0.398	0.0861	
15 minute winter	S20	13.002	MHS107	15.8	1.096	0.382	0.2283	
15 minute summer	RE11	14.000	S21	0.0	0.000	0.000	0.0326	
15 minute winter	S21	14.001	S22	2.8	0.944	0.348	0.0342	
15 minute winter	S22	14.002	S23	2.8	1.261	0.253	0.0137	
15 minute summer	RE12	15.000	S23	0.0	0.000	0.000	0.0121	
15 minute winter	S23	14.003	MHS107	5.5	1.032	0.071	0.0946	
15 minute winter	MHS107	1.009	MHS108	161.1	1.461	0.841	3.7287	
15 minute summer	RE13	16.000	S24	0.0	0.000	0.000	0.0492	

Flow+ v12.0 Copyright © 1988-2025 Causeway Technologies Ltd

Results for 30 year Critical Storm Duration. Lowest mass balance: 99.10%

Node Event	US Node	Peak (mins)	Level (m)	Depth (m)	Inflow (l/s)	Node Vol (m³)	Flood (m³)	Status
15 minute winter	S24	10	139.355	0.055	4.4	0.0087	0.0000	OK
15 minute winter	S25	11	139.246	0.046	4.3	0.0074	0.0000	OK
15 minute winter	S26	10	138.962	0.062	9.9	0.0098	0.0000	OK
15 minute winter	MHS400	11	138.586	0.086	9.7	0.0974	0.0000	OK
15 minute winter	S32	10	138.728	0.088	8.8	0.0248	0.0000	OK
240 minute winter	MHS a	228	138.097	0.197	3.1	0.3484	0.0000	OK
240 minute winter	MHS b	228	138.097	0.207	16.1	0.3663	0.0000	OK
240 minute winter	MHS 902	220	138.102	0.492	42.3	0.8691	0.0000	SURCHARGED
240 minute winter	AT Phase 1	228	138.097	0.597	21.3	72.4103	0.0000	SURCHARGED
240 minute winter	MHS 903	228	138.098	0.657	7.6	1.6733	0.0000	SURCHARGED
240 minute winter	S36A	188	136.771	0.271	2.0	8.0169	0.0000	SURCHARGED
480 minute winter	S36B	360	136.591	0.271	1.0	6.7445	0.0000	SURCHARGED
15 minute winter	MHS401	11	138.582	0.252	24.5	0.4455	0.0000	SURCHARGED
15 minute winter	MHS402	12	138.360	0.110	22.5	0.1242	0.0000	OK
15 minute summer	RE14	1	139.530	0.000	0.0	0.0000	0.0000	OK
15 minute winter	S27	10	139.252	0.052	4.4	0.0083	0.0000	OK
15 minute summer	RE15	1	139.510	0.000	0.0	0.0000	0.0000	OK
15 minute winter	S28	11	139.186	0.086	9.6	0.0136	0.0000	OK
15 minute summer	RE16	1	139.690	0.000	0.0	0.0000	0.0000	OK
15 minute summer	S29	1	139.250	0.000	0.0	0.0000	0.0000	OK
15 minute winter	S30	11	139.060	0.059	9.4	0.0095	0.0000	OK
15 minute summer	RE17	1	139.340	0.000	0.0	0.0000	0.0000	OK
15 minute winter	S31	11	138.942	0.041	9.4	0.0066	0.0000	OK

Link Event (Outflow)	US Node	Link	DS Node	Outflow (l/s)	Velocity (m/s)	Flow/Cap	Link Vol (m³)	Discharge Vol (m³)
15 minute winter	S24	16.001	S25	4.3	0.834	0.257	0.0580	
15 minute winter	S25	16.002	S26	4.3	0.766	0.207	0.1271	
15 minute winter	S26	16.003	MHS400	9.7	1.371	0.335	0.1291	
15 minute winter	MHS400	16.004	MHS401	10.2	0.422	0.200	0.4687	
15 minute winter	S32	17.000	MHS b	8.5	0.817	0.615	0.2725	
15 minute winter	MHS a	31.000	MHS 901	13.7	0.542	0.120	0.5144	
15 minute winter	MHS b	5.003	MHS 901	69.7	1.533	0.617	0.7917	
15 minute winter	MHS 902	5.005	AT Phase 1	82.7	1.949	0.300	1.3659	
960 minute winter	AT Phase 1	5.006	MHS 903	7.7	0.144	0.030	1.5254	
30 minute summer	MHS 903	5.007	MHS109A	3.7	1.427	0.019	0.1029	
240 minute winter	S36A	32.000	MHS110	0.5	0.484	0.022	0.0124	
480 minute winter	S36B	33.000	MHS110	0.3	0.380	0.015	0.0111	
15 minute winter	MHS401	16.005	MHS402	22.5	1.335	1.397	0.1518	
15 minute winter	MHS402	16.006	MHS403	22.5	1.377	0.254	0.3949	
15 minute summer	RE14	18.000	S27	0.0	0.000	0.000	0.0687	
15 minute winter	S27	18.001	S28	4.3	0.544	0.259	0.0913	
15 minute summer	RE15	19.000	S28	0.0	0.000	0.000	0.1639	
15 minute winter	S28	18.002	S30	9.4	1.111	0.564	0.0963	
15 minute summer	RE16	20.000	S29	0.0	0.000	0.000	0.0000	
15 minute summer	S29	20.001	S30	0.0	0.000	0.000	0.0298	
15 minute winter	S30	18.003	S31	9.4	1.810	0.204	0.0079	
15 minute summer	RE17	21.000	S31	0.0	0.000	0.000	0.0680	
15 minute winter	S31	18.004	MHS403	9.4	1.760	0.167	0.0432	

Flow+ v12.0 Copyright © 1988-2025 Causeway Technologies Ltd

Results for 30 year Critical Storm Duration. Lowest mass balance: 99.10%

Node Event	US Node	Peak (mins)	Level (m)	Depth (m)	Inflow (l/s)	Node Vol (m³)	Flood (m³)	Status
15 minute winter	MHS403	11	138.162	0.062	44.4	0.0698	0.0000	OK
120 minute winter	MHS108	116	137.750	1.130	96.6	166.5965	0.0000	SURCHARGED
15 minute summer	S33	1	138.100	0.000	0.0	0.0000	0.0000	OK
120 minute winter	S34	114	137.750	0.070	2.3	0.0112	0.0000	OK
15 minute summer	RE18	1	138.090	0.000	0.0	0.0000	0.0000	OK
120 minute winter	S35	114	137.750	0.180	4.6	0.0287	0.0000	SURCHARGED
120 minute winter	Attenuation Tank	116	137.750	1.050	12.7	0.0000	0.0000	SURCHARGED
360 minute summer	MHS109	320	136.464	0.104	16.8	0.1171	0.0000	OK
180 minute winter	MHS109A	100	136.230	0.130	20.5	0.1468	0.0000	OK
600 minute summer	MHS110	345	136.143	0.093	21.1	0.1052	0.0000	OK
480 minute winter	MHD204	272	136.052	0.074	21.1	0.0000	0.0000	OK
15 minute summer	RE19	1	139.600	0.000	0.0	0.0000	0.0000	OK
15 minute winter	S37	10	139.398	0.048	5.7	0.0077	0.0000	OK
15 minute summer	RE20	1	139.330	0.000	0.0	0.0000	0.0000	OK
15 minute winter	S38	10	139.148	0.048	11.3	0.0076	0.0000	OK

Link Event (Outflow)	US Node	Link	DS Node	Outflow (l/s)	Velocity (m/s)	Flow/Cap	Link Vol (m³)	Discharge Vol (m³)
15 minute winter	MHS403	16.007	MHS108	44.5	1.346	0.094	0.3374	
60 minute summer	MHS108	1.010	MHS109	16.8	1.002	0.354	0.5218	
15 minute summer	S33	22.000	S34	0.0	0.000	0.000	0.1479	
15 minute winter	S34	22.001	S35	6.1	0.767	0.350	0.0917	
15 minute summer	RE18	23.000	S35	0.0	0.000	0.000	0.1765	
15 minute winter	S35	22.002	Attenuation Tank	12.1	1.205	0.494	0.3955	
15 minute winter	Attenuation Tank	22.003	MHS108	32.0	0.581	0.386	1.0075	
480 minute summer	MHS109	1.011	MHS109A	16.8	0.808	0.441	1.0002	
30 minute winter	MHS109A	1.012	MHS110	20.5	1.047	0.658	0.2698	
480 minute winter	MHS110	1.013	MHD204	21.1	1.578	0.235	0.0324	593.5
15 minute summer	RE19	25.000	S37	0.0	0.000	0.000	0.0831	
15 minute winter	S37	25.001	S38	5.6	1.140	0.209	0.0545	
15 minute summer	RE20	26.000	S38	0.0	0.000	0.000	0.0826	
15 minute winter	S38	25.002	MHS101	11.1	0.953	0.222	0.0912	

Flow+ v12.0 Copyright © 1988-2025 Causeway Technologies Ltd

Results for 30 year +40% CC Critical Storm Duration. Lowest mass balance: 99.10%

Node Event	US Node	Peak (mins)	Level (m)	Depth (m)	Inflow (l/s)	Node Vol (m³)	Flood (m³)	Status
15 minute summer	RE1	1	139.570	0.000	0.0	0.0000	0.0000	OK
15 minute winter	S1	10	139.453	0.053	6.2	0.0085	0.0000	OK
15 minute summer	RE2	1	139.620	0.000	0.0	0.0000	0.0000	OK
15 minute winter	S2	10	139.265	0.065	12.3	0.0104	0.0000	OK
15 minute winter	MHS100	13	138.943	0.243	12.1	0.4297	0.0000	OK
15 minute summer	RE3	1	139.800	0.000	0.0	0.0000	0.0000	OK
15 minute winter	S3	10	139.738	0.038	3.1	0.0061	0.0000	OK
15 minute winter	S4	11	139.537	0.037	3.0	0.0059	0.0000	OK
15 minute summer	RE4	1	139.700	0.000	0.0	0.0000	0.0000	OK
15 minute winter	S5	10	139.599	0.049	4.8	0.0078	0.0000	OK
15 minute winter	S6	10	139.391	0.041	4.7	0.0065	0.0000	OK
15 minute winter	S7	11	139.121	0.071	15.5	0.0112	0.0000	OK
15 minute winter	MHS101	13	138.928	0.478	58.9	0.8438	0.0000	SURCHARGED
15 minute winter	S8	10	138.787	0.057	7.5	0.0161	0.0000	OK
15 minute winter	MHS c	10	138.744	0.164	57.9	0.5694	0.0000	OK
15 minute winter	MHS 900	11	138.537	0.147	57.1	0.2605	0.0000	OK
360 minute winter	MHS 901	344	138.470	0.760	30.4	1.3434	0.0000	SURCHARGED
15 minute winter	MHS200	13	138.888	0.388	16.7	0.6859	0.0000	SURCHARGED
15 minute summer	RE5	1	139.430	0.000	0.0	0.0000	0.0000	OK
15 minute winter	S9	13	139.326	0.326	9.2	0.0519	0.0000	SURCHARGED
15 minute summer	RE6	1	139.440	0.000	0.0	0.0000	0.0000	OK
15 minute winter	S10	13	139.217	0.367	7.1	0.0584	0.0000	SURCHARGED
15 minute winter	S11	13	139.164	0.414	14.9	0.0658	0.0000	SURCHARGED
15 minute summer	RE7	1	139.770	0.000	0.0	0.0000	0.0000	OK
15 minute winter	S12	10	139.691	0.041	2.2	0.0065	0.0000	OK

Link Event (Outflow)	US Node	Link	DS Node	Outflow (l/s)	Velocity (m/s)	Flow/Cap	Link Vol (m³)	Discharge Vol (m³)
15 minute summer	RE1	1.000	S1	0.0	0.000	0.000	0.0683	
15 minute winter	S1	1.001	S2	6.1	0.942	0.260	0.0746	
15 minute summer	RE2	2.000	S2	0.0	0.000	0.000	0.0664	
15 minute winter	S2	1.002	MHS100	12.1	1.649	0.364	0.1701	
15 minute summer	MHS100	1.003	MHS101	15.4	0.439	0.137	1.2195	
15 minute summer	RE3	3.000	S3	0.0	0.000	0.000	0.0252	
15 minute winter	S3	3.001	S4	3.0	0.892	0.133	0.0413	
15 minute winter	S4	3.002	S7	3.0	0.530	0.132	0.1586	
15 minute summer	RE4	4.000	S5	0.0	0.000	0.000	0.0538	
15 minute winter	S5	4.001	S6	4.7	1.072	0.207	0.0536	
15 minute winter	S6	4.002	S7	4.7	0.792	0.161	0.0675	
15 minute winter	S7	4.003	MHS101	15.3	1.031	0.448	0.2115	
15 minute summer	MHS101	1.004	MHS102	55.5	1.009	0.527	1.1747	
15 minute winter	S8	5.000	MHS c	7.4	0.382	0.141	0.2847	
15 minute winter	MHS c	5.001	MHS 900	57.1	1.548	0.506	0.6787	
15 minute winter	MHS 900	5.002	MHS b	56.3	1.163	0.495	2.2920	
15 minute winter	MHS 901	5.004	MHS 902	115.6	1.481	0.343	0.9008	
15 minute summer	MHS200	30.000	MHS102	15.7	0.421	0.168	1.9810	
15 minute summer	RE5	6.000	S9	0.0	0.000	0.000	0.1353	
15 minute summer	S9	6.001	S10	7.1	1.001	1.012	0.0864	
15 minute summer	RE6	7.000	S11	0.0	0.000	0.000	0.1154	
15 minute winter	S10	6.002	S11	7.1	1.119	0.814	0.0382	
30 minute summer	S11	6.003	MHS102	13.0	1.670	0.813	0.0513	
15 minute summer	RE7	8.000	S12	0.0	0.000	0.000	0.0143	
15 minute winter	S12	8.001	S13	2.2	0.818	0.319	0.0295	

Flow+ v12.0 Copyright © 1988-2025 Causeway Technologies Ltd

Results for 30 year +40% CC Critical Storm Duration. Lowest mass balance: 99.10%

Node Event	US Node	Peak (mins)	Level (m)	Depth (m)	Inflow (l/s)	Node Vol (m³)	Flood (m³)	Status
15 minute winter	S13	11	139.544	0.034	2.2	0.0053	0.0000	OK
15 minute winter	S14	10	139.465	0.025	4.3	0.0040	0.0000	OK
15 minute winter	MHS300	13	138.719	0.169	11.8	0.1913	0.0000	OK
15 minute winter	MHS102	13	138.890	0.590	94.7	1.0420	0.0000	SURCHARGED
15 minute winter	MHS103	13	138.701	0.701	119.1	1.2388	0.0000	SURCHARGED
15 minute winter	MHS104	12	138.358	0.808	142.2	1.4275	0.0000	SURCHARGED
15 minute summer	RE8	1	139.320	0.000	0.0	0.0000	0.0000	OK
15 minute winter	S15	10	138.983	0.083	11.0	0.0131	0.0000	OK
15 minute summer	RE9	1	139.100	0.000	0.0	0.0000	0.0000	OK
15 minute winter	S16	11	138.818	0.068	29.5	0.0109	0.0000	OK
180 minute winter	MHS500	176	138.247	0.647	4.3	0.7321	0.0000	SURCHARGED
180 minute winter	MHS501	176	138.247	0.857	12.5	0.9695	0.0000	SURCHARGED
180 minute winter	MHS106	176	138.247	1.147	63.9	2.0265	0.0000	SURCHARGED
15 minute summer	S17	1	138.700	0.000	0.0	0.0000	0.0000	OK
15 minute summer	S18	1	138.560	0.000	0.0	0.0000	0.0000	OK
15 minute summer	RE10	1	138.700	0.000	0.0	0.0000	0.0000	OK
180 minute winter	S19	176	138.247	0.197	3.1	0.0314	0.0000	SURCHARGED
180 minute winter	S20	176	138.247	0.337	6.2	0.0536	0.0000	SURCHARGED
15 minute summer	RE11	1	139.450	0.000	0.0	0.0000	0.0000	OK
15 minute winter	S21	10	139.152	0.052	4.0	0.0083	0.0000	OK
15 minute winter	S22	11	138.946	0.046	3.9	0.0072	0.0000	OK
15 minute summer	RE12	1	138.940	0.000	0.0	0.0000	0.0000	OK
15 minute winter	S23	10	138.732	0.032	7.8	0.0051	0.0000	OK
180 minute winter	MHS107	176	138.247	1.317	71.1	2.3264	0.0000	SURCHARGED
15 minute summer	RE13	1	139.450	0.000	0.0	0.0000	0.0000	OK

Link Event (Outflow)	US Node	Link	DS Node	Outflow (l/s)	Velocity (m/s)	Flow/Cap	Link Vol (m³)	Discharge Vol (m³)
15 minute winter	S13	8.002	S14	2.2	0.897	0.093	0.0100	
15 minute winter	S14	8.003	MHS300	4.3	1.043	0.060	0.0533	
15 minute winter	MHS300	8.004	MHS103	11.7	0.402	0.160	1.0145	
30 minute summer	MHS102	1.005	MHS103	91.0	1.441	0.867	2.3661	
15 minute winter	MHS103	1.006	MHS104	105.8	1.594	0.849	2.5229	
15 minute winter	MHS104	1.007	MHS106	127.3	1.808	0.963	2.2464	
15 minute summer	RE8	9.000	S15	0.0	0.000	0.000	0.2528	
15 minute winter	S15	9.001	S16	10.7	1.223	0.516	0.0982	
15 minute summer	RE9	10.000	S16	0.0	0.000	0.000	0.1894	
15 minute winter	S16	9.002	MHS501	29.3	2.096	0.402	0.1043	
15 minute winter	MHS500	11.000	MHS501	14.5	0.765	0.275	0.8162	
15 minute winter	MHS501	9.003	MHS106	39.6	0.996	0.656	0.8564	
15 minute winter	MHS106	1.008	MHS107	170.3	1.683	0.607	0.9567	
15 minute summer	S17	12.000	S18	0.0	0.000	0.000	0.0000	
15 minute summer	S18	12.001	S20	0.0	0.000	0.000	0.3121	
15 minute summer	RE10	13.000	S19	0.0	0.000	0.000	0.2610	
15 minute winter	S19	13.001	S20	11.1	1.067	0.556	0.1312	
15 minute winter	S20	13.002	MHS107	21.0	1.280	0.506	0.2797	
15 minute summer	RE11	14.000	S21	0.0	0.000	0.000	0.0420	
15 minute winter	S21	14.001	S22	3.9	1.025	0.491	0.0444	
15 minute winter	S22	14.002	S23	3.9	1.381	0.354	0.0175	
15 minute summer	RE12	15.000	S23	0.0	0.000	0.000	0.0153	
15 minute winter	S23	14.003	MHS107	7.8	1.132	0.101	0.0975	
15 minute winter	MHS107	1.009	MHS108	195.3	1.771	1.020	3.7287	
15 minute summer	RE13	16.000	S24	0.0	0.000	0.000	0.0633	

Flow+ v12.0 Copyright © 1988-2025 Causeway Technologies Ltd

Results for 30 year +40% CC Critical Storm Duration. Lowest mass balance: 99.10%

Node Event	US Node	Peak (mins)	Level (m)	Depth (m)	Inflow (l/s)	Node Vol (m³)	Flood (m³)	Status
15 minute winter	S24	10	139.366	0.066	6.2	0.0105	0.0000	OK
15 minute winter	S25	11	139.255	0.055	6.1	0.0088	0.0000	OK
15 minute winter	S26	10	138.972	0.072	13.8	0.0115	0.0000	OK
15 minute winter	MHS400	11	138.779	0.279	13.6	0.3151	0.0000	SURCHARGED
15 minute winter	S32	10	138.752	0.112	12.3	0.0317	0.0000	OK
360 minute winter	MHS a	344	138.470	0.570	3.3	1.0077	0.0000	SURCHARGED
360 minute winter	MHS b	344	138.470	0.580	17.1	1.0255	0.0000	SURCHARGED
360 minute winter	MHS 902	344	138.470	0.860	55.6	1.5201	0.0000	SURCHARGED
360 minute winter	AT Phase 1	344	138.470	0.970	33.6	117.6426	0.0000	SURCHARGED
360 minute winter	MHS 903	344	138.470	1.030	8.6	2.6219	0.0000	SURCHARGED
360 minute winter	S36A	272	136.898	0.398	2.2	11.8033	0.0000	SURCHARGED
600 minute winter	S36B	450	136.726	0.406	1.1	10.0940	0.0000	SURCHARGED
15 minute winter	MHS401	11	138.765	0.435	32.1	0.7694	0.0000	SURCHARGED
15 minute winter	MHS402	12	138.381	0.131	30.9	0.1476	0.0000	OK
15 minute summer	RE14	1	139.530	0.000	0.0	0.0000	0.0000	OK
15 minute winter	S27	10	139.263	0.063	6.2	0.0100	0.0000	OK
15 minute summer	RE15	1	139.510	0.000	0.0	0.0000	0.0000	OK
15 minute winter	S28	11	139.207	0.107	13.5	0.0170	0.0000	OK
15 minute summer	RE16	1	139.690	0.000	0.0	0.0000	0.0000	OK
15 minute summer	S29	1	139.250	0.000	0.0	0.0000	0.0000	OK
15 minute winter	S30	11	139.074	0.074	13.2	0.0118	0.0000	OK
15 minute summer	RE17	1	139.340	0.000	0.0	0.0000	0.0000	OK
15 minute winter	S31	11	138.950	0.050	13.3	0.0079	0.0000	OK

Link Event (Outflow)	US Node	Link	DS Node	Outflow (l/s)	Velocity (m/s)	Flow/Cap	Link Vol (m³)	Discharge Vol (m³)
15 minute winter	S24	16.001	S25	6.1	0.913	0.363	0.0749	
15 minute winter	S25	16.002	S26	6.0	0.844	0.292	0.1595	
15 minute winter	S26	16.003	MHS400	13.6	1.377	0.471	0.1975	
15 minute winter	MHS400	16.004	MHS401	13.2	0.412	0.256	0.6939	
15 minute winter	S32	17.000	MHS b	11.9	0.890	0.859	0.3485	
15 minute winter	MHS a	31.000	MHS 901	19.1	0.597	0.169	0.6578	
15 minute winter	MHS b	5.003	MHS 901	97.4	1.643	0.862	1.0314	
15 minute winter	MHS 902	5.005	AT Phase 1	114.0	2.026	0.413	2.0770	
15 minute summer	AT Phase 1	5.006	MHS 903	-10.5	-0.331	-0.041	1.4480	
15 minute summer	MHS 903	5.007	MHS109A	3.7	1.465	0.019	0.1029	
360 minute winter	S36A	32.000	MHS110	0.6	0.514	0.027	0.0142	
600 minute winter	S36B	33.000	MHS110	0.3	0.404	0.018	0.0128	
15 minute winter	MHS401	16.005	MHS402	30.9	1.762	1.916	0.1636	
15 minute winter	MHS402	16.006	MHS403	31.2	1.504	0.352	0.4944	
15 minute summer	RE14	18.000	S27	0.0	0.000	0.000	0.0880	
15 minute winter	S27	18.001	S28	6.0	0.590	0.367	0.1180	
15 minute summer	RE15	19.000	S28	0.0	0.000	0.000	0.2115	
15 minute winter	S28	18.002	S30	13.2	1.188	0.795	0.1260	
15 minute summer	RE16	20.000	S29	0.0	0.000	0.000	0.0000	
15 minute summer	S29	20.001	S30	0.0	0.000	0.000	0.0396	
15 minute winter	S30	18.003	S31	13.3	1.940	0.288	0.0103	
15 minute summer	RE17	21.000	S31	0.0	0.000	0.000	0.0867	
15 minute winter	S31	18.004	MHS403	13.3	1.980	0.235	0.0540	

Flow+ v12.0 Copyright © 1988-2025 Causeway Technologies Ltd

Results for 30 year +40% CC Critical Storm Duration. Lowest mass balance: 99.10%

Node Event	US Node	Peak (mins)	Level (m)	Depth (m)	Inflow (l/s)	Node Vol (m³)	Flood (m³)	Status
180 minute winter	MHS403	172	138.249	0.148	18.6	0.1679	0.0000	OK
180 minute winter	MHS108	176	138.246	1.626	101.2	276.1794	0.0000	SURCHARGED
180 minute winter	S33	176	138.246	0.146	0.4	0.0233	0.0000	OK
180 minute winter	S34	176	138.246	0.566	2.4	0.0900	0.0000	SURCHARGED
180 minute winter	RE18	176	138.246	0.156	0.6	0.0028	0.0000	SURCHARGED
180 minute winter	S35	176	138.246	0.676	4.8	0.1075	0.0000	SURCHARGED
180 minute winter	Attenuation Tank	176	138.246	1.546	13.3	0.0000	0.0000	SURCHARGED
1440 minute winter	MHS109	900	136.464	0.104	16.8	0.1171	0.0000	OK
180 minute winter	MHS109A	88	136.230	0.130	20.5	0.1468	0.0000	OK
1440 minute summer	MHS110	780	136.143	0.093	21.1	0.1052	0.0000	OK
1440 minute summer	MHD204	780	136.052	0.074	21.1	0.0000	0.0000	OK
15 minute summer	RE19	1	139.600	0.000	0.0	0.0000	0.0000	OK
15 minute winter	S37	10	139.408	0.058	7.9	0.0092	0.0000	OK
15 minute summer	RE20	1	139.330	0.000	0.0	0.0000	0.0000	OK
15 minute winter	S38	11	139.158	0.058	15.6	0.0092	0.0000	OK

Link Event (Outflow)	US Node	Link	DS Node	Outflow (l/s)	Velocity (m/s)	Flow/Cap	Link Vol (m³)	Discharge Vol (m³)
15 minute winter	MHS403	16.007	MHS108	61.3	1.280	0.130	0.3485	
15 minute winter	MHS108	1.010	MHS109	16.8	1.071	0.354	0.5218	
120 minute winter	S33	22.000	S34	-0.7	-0.059	-0.041	0.7018	
15 minute winter	S34	22.001	S35	8.5	0.824	0.491	0.1200	
120 minute winter	RE18	23.000	S35	-0.6	-0.050	-0.030	0.7132	
15 minute winter	S35	22.002	Attenuation Tank	16.8	1.198	0.683	0.4558	
15 minute winter	Attenuation Tank	22.003	MHS108	45.6	0.647	0.550	1.0075	
1440 minute winter	MHS109	1.011	MHS109A	16.8	0.817	0.441	0.9972	
15 minute winter	MHS109A	1.012	MHS110	20.5	1.047	0.658	0.2698	
1440 minute summer	MHS110	1.013	MHD204	21.1	1.579	0.235	0.0325	1060.1
15 minute summer	RE19	25.000	S37	0.0	0.000	0.000	0.1069	
15 minute winter	S37	25.001	S38	7.8	1.243	0.290	0.0695	
15 minute summer	RE20	26.000	S38	0.0	0.000	0.000	0.1051	
15 minute winter	S38	25.002	MHS101	15.5	1.107	0.309	0.0988	

Flow+ v12.0 Copyright © 1988-2025 Causeway Technologies Ltd

Results for 100 year Critical Storm Duration. Lowest mass balance: 99.10%

Node Event	US Node	Peak (mins)	Level (m)	Depth (m)	Inflow (l/s)	Node Vol (m³)	Flood (m³)	Status
15 minute summer	RE1	1	139.570	0.000	0.0	0.0000	0.0000	OK
15 minute winter	S1	10	139.451	0.051	5.7	0.0081	0.0000	OK
15 minute summer	RE2	1	139.620	0.000	0.0	0.0000	0.0000	OK
15 minute winter	S2	10	139.262	0.062	11.3	0.0099	0.0000	OK
15 minute winter	MHS100	13	138.804	0.104	11.2	0.1834	0.0000	OK
15 minute summer	RE3	1	139.800	0.000	0.0	0.0000	0.0000	OK
15 minute winter	S3	10	139.736	0.036	2.8	0.0058	0.0000	OK
15 minute winter	S4	11	139.535	0.035	2.8	0.0056	0.0000	OK
15 minute summer	RE4	1	139.700	0.000	0.0	0.0000	0.0000	OK
15 minute winter	S5	10	139.597	0.047	4.5	0.0075	0.0000	OK
15 minute winter	S6	10	139.389	0.039	4.4	0.0062	0.0000	OK
15 minute winter	S7	11	139.117	0.067	14.3	0.0107	0.0000	OK
15 minute winter	MHS101	13	138.794	0.344	54.4	0.6073	0.0000	SURCHARGED
15 minute winter	S8	10	138.785	0.054	6.9	0.0154	0.0000	OK
15 minute winter	MHS c	10	138.736	0.156	53.5	0.5418	0.0000	OK
15 minute winter	MHS 900	11	138.531	0.141	52.8	0.2488	0.0000	OK
240 minute winter	MHS 901	236	138.371	0.661	29.5	1.1676	0.0000	SURCHARGED
15 minute winter	MHS200	12	138.766	0.266	15.4	0.4701	0.0000	OK
15 minute summer	RE5	1	139.430	0.000	0.0	0.0000	0.0000	OK
15 minute winter	S9	13	139.225	0.225	8.5	0.0358	0.0000	SURCHARGED
15 minute summer	RE6	1	139.440	0.000	0.0	0.0000	0.0000	OK
15 minute winter	S10	13	139.112	0.262	7.1	0.0416	0.0000	SURCHARGED
15 minute winter	S11	13	139.051	0.301	14.8	0.0478	0.0000	SURCHARGED
15 minute summer	RE7	1	139.770	0.000	0.0	0.0000	0.0000	OK
15 minute winter	S12	10	139.689	0.039	2.0	0.0062	0.0000	OK

Link Event (Outflow)	US Node	Link	DS Node	Outflow (l/s)	Velocity (m/s)	Flow/Cap	Link Vol (m³)	Discharge Vol (m³)
15 minute summer	RE1	1.000	S1	0.0	0.000	0.000	0.0640	
15 minute winter	S1	1.001	S2	5.6	0.925	0.239	0.0701	
15 minute summer	RE2	2.000	S2	0.0	0.000	0.000	0.0627	
15 minute winter	S2	1.002	MHS100	11.2	1.612	0.335	0.1279	
15 minute winter	MHS100	1.003	MHS101	11.1	0.437	0.099	1.1229	
15 minute summer	RE3	3.000	S3	0.0	0.000	0.000	0.0239	
15 minute winter	S3	3.001	S4	2.8	0.868	0.121	0.0386	
15 minute winter	S4	3.002	S7	2.8	0.519	0.121	0.1487	
15 minute summer	RE4	4.000	S5	0.0	0.000	0.000	0.0504	
15 minute winter	S5	4.001	S6	4.4	1.052	0.193	0.0508	
15 minute winter	S6	4.002	S7	4.3	0.778	0.149	0.0634	
15 minute winter	S7	4.003	MHS101	14.1	0.966	0.414	0.2072	
15 minute winter	MHS101	1.004	MHS102	53.3	1.010	0.506	1.1747	
15 minute winter	S8	5.000	MHS c	6.8	0.374	0.130	0.2695	
15 minute winter	MHS c	5.001	MHS 900	52.8	1.520	0.467	0.6385	
15 minute winter	MHS 900	5.002	MHS b	52.0	1.150	0.457	2.1501	
15 minute winter	MHS 901	5.004	MHS 902	107.1	1.460	0.318	0.7820	
15 minute winter	MHS200	30.000	MHS102	15.2	0.402	0.162	1.9195	
15 minute summer	RE5	6.000	S9	0.0	0.000	0.000	0.1353	
30 minute summer	S9	6.001	S10	7.1	1.003	1.004	0.0864	
15 minute summer	RE6	7.000	S11	0.0	0.000	0.000	0.1154	
30 minute summer	S10	6.002	S11	6.8	0.980	0.784	0.0382	
30 minute winter	S11	6.003	MHS102	12.9	1.650	0.807	0.0513	
15 minute summer	RE7	8.000	S12	0.0	0.000	0.000	0.0133	
15 minute winter	S12	8.001	S13	2.0	0.797	0.290	0.0275	

Flow+ v12.0 Copyright © 1988-2025 Causeway Technologies Ltd

Results for 100 year Critical Storm Duration. Lowest mass balance: 99.10%

Node Event	US Node	Peak (mins)	Level (m)	Depth (m)	Inflow (l/s)	Node Vol (m³)	Flood (m³)	Status
15 minute winter	S13	11	139.542	0.032	2.0	0.0051	0.0000	OK
15 minute winter	S14	10	139.464	0.024	3.9	0.0038	0.0000	OK
15 minute winter	MHS300	10	138.608	0.058	10.8	0.0656	0.0000	OK
15 minute winter	MHS102	13	138.758	0.458	98.4	0.8096	0.0000	SURCHARGED
15 minute winter	MHS103	12	138.597	0.597	111.8	1.0553	0.0000	SURCHARGED
15 minute winter	MHS104	12	138.278	0.728	134.4	1.2869	0.0000	SURCHARGED
15 minute summer	RE8	1	139.320	0.000	0.0	0.0000	0.0000	OK
15 minute winter	S15	10	138.979	0.079	10.2	0.0126	0.0000	OK
15 minute summer	RE9	1	139.100	0.000	0.0	0.0000	0.0000	OK
15 minute winter	S16	10	138.813	0.063	27.4	0.0101	0.0000	OK
120 minute winter	MHS500	118	138.126	0.526	5.4	0.5948	0.0000	SURCHARGED
120 minute winter	MHS501	118	138.126	0.736	15.4	0.8324	0.0000	SURCHARGED
120 minute winter	MHS106	118	138.126	1.026	77.5	1.8125	0.0000	SURCHARGED
15 minute summer	S17	1	138.700	0.000	0.0	0.0000	0.0000	OK
15 minute summer	S18	1	138.560	0.000	0.0	0.0000	0.0000	OK
15 minute summer	RE10	1	138.700	0.000	0.0	0.0000	0.0000	OK
15 minute winter	S19	10	138.132	0.082	10.6	0.0130	0.0000	OK
120 minute winter	S20	118	138.126	0.216	7.8	0.0343	0.0000	SURCHARGED
15 minute summer	RE11	1	139.450	0.000	0.0	0.0000	0.0000	OK
15 minute winter	S21	10	139.150	0.050	3.7	0.0079	0.0000	OK
15 minute winter	S22	11	138.944	0.043	3.6	0.0069	0.0000	OK
15 minute summer	RE12	1	138.940	0.000	0.0	0.0000	0.0000	OK
15 minute winter	S23	10	138.731	0.031	7.2	0.0049	0.0000	OK
120 minute winter	MHS107	118	138.125	1.195	85.9	2.1122	0.0000	SURCHARGED
15 minute summer	RE13	1	139.450	0.000	0.0	0.0000	0.0000	OK

Link Event (Outflow)	US Node	Link	DS Node	Outflow (l/s)	Velocity (m/s)	Flow/Cap	Link Vol (m³)	Discharge Vol (m³)
15 minute winter	S13	8.002	S14	2.0	0.873	0.084	0.0093	
15 minute winter	S14	8.003	MHS300	3.9	1.008	0.054	0.0223	
15 minute winter	MHS300	8.004	MHS103	10.7	0.378	0.147	0.6762	
15 minute summer	MHS102	1.005	MHS103	91.7	1.447	0.874	2.3661	
15 minute winter	MHS103	1.006	MHS104	100.8	1.615	0.809	2.5229	
15 minute summer	MHS104	1.007	MHS106	124.2	1.764	0.940	2.2464	
15 minute summer	RE8	9.000	S15	0.0	0.000	0.000	0.2375	
15 minute winter	S15	9.001	S16	9.9	1.212	0.479	0.0916	
15 minute summer	RE9	10.000	S16	0.0	0.000	0.000	0.1785	
15 minute winter	S16	9.002	MHS501	27.2	2.075	0.372	0.1011	
15 minute summer	MHS500	11.000	MHS501	13.8	0.771	0.262	0.8162	
15 minute winter	MHS501	9.003	MHS106	34.9	0.913	0.578	0.8564	
15 minute winter	MHS106	1.008	MHS107	163.5	1.656	0.582	0.9567	
15 minute summer	S17	12.000	S18	0.0	0.000	0.000	0.0000	
15 minute summer	S18	12.001	S20	0.0	0.000	0.000	0.2716	
15 minute summer	RE10	13.000	S19	0.0	0.000	0.000	0.2444	
15 minute winter	S19	13.001	S20	10.3	1.066	0.515	0.1175	
15 minute winter	S20	13.002	MHS107	19.5	1.236	0.470	0.2639	
15 minute summer	RE11	14.000	S21	0.0	0.000	0.000	0.0394	
15 minute winter	S21	14.001	S22	3.6	1.007	0.453	0.0418	
15 minute winter	S22	14.002	S23	3.6	1.353	0.326	0.0165	
15 minute summer	RE12	15.000	S23	0.0	0.000	0.000	0.0144	
15 minute winter	S23	14.003	MHS107	7.2	1.146	0.093	0.0968	
15 minute winter	MHS107	1.009	MHS108	186.1	1.687	0.971	3.7287	
15 minute summer	RE13	16.000	S24	0.0	0.000	0.000	0.0594	

Flow+ v12.0 Copyright © 1988-2025 Causeway Technologies Ltd

Results for 100 year Critical Storm Duration. Lowest mass balance: 99.10%

Node Event	US Node	Peak (mins)	Level (m)	Depth (m)	Inflow (l/s)	Node Vol (m³)	Flood (m³)	Status
15 minute winter	S24	10	139.363	0.063	5.7	0.0100	0.0000	OK
15 minute winter	S25	11	139.253	0.053	5.6	0.0084	0.0000	OK
15 minute winter	S26	10	138.969	0.069	12.8	0.0110	0.0000	OK
15 minute winter	MHS400	12	138.715	0.215	12.6	0.2435	0.0000	OK
15 minute winter	S32	10	138.745	0.105	11.4	0.0298	0.0000	OK
240 minute winter	MHS a	236	138.371	0.471	4.0	0.8319	0.0000	SURCHARGED
240 minute winter	MHS b	236	138.371	0.481	20.8	0.8497	0.0000	SURCHARGED
240 minute winter	MHS 902	236	138.371	0.761	44.7	1.3443	0.0000	SURCHARGED
240 minute winter	AT Phase 1	236	138.371	0.871	34.7	105.5839	0.0000	SURCHARGED
240 minute winter	MHS 903	236	138.371	0.931	8.3	2.3688	0.0000	SURCHARGED
240 minute winter	S36A	192	136.862	0.362	2.7	10.7145	0.0000	SURCHARGED
360 minute winter	S36B	280	136.684	0.364	1.5	9.0495	0.0000	SURCHARGED
15 minute winter	MHS401	12	138.704	0.374	28.8	0.6600	0.0000	SURCHARGED
15 minute winter	MHS402	12	138.374	0.124	28.2	0.1405	0.0000	OK
15 minute summer	RE14	1	139.530	0.000	0.0	0.0000	0.0000	OK
15 minute winter	S27	10	139.260	0.060	5.7	0.0095	0.0000	OK
15 minute summer	RE15	1	139.510	0.000	0.0	0.0000	0.0000	OK
15 minute winter	S28	11	139.201	0.101	12.5	0.0161	0.0000	OK
15 minute summer	RE16	1	139.690	0.000	0.0	0.0000	0.0000	OK
15 minute summer	S29	1	139.250	0.000	0.0	0.0000	0.0000	OK
15 minute winter	S30	11	139.070	0.070	12.2	0.0112	0.0000	OK
15 minute summer	RE17	1	139.340	0.000	0.0	0.0000	0.0000	OK
15 minute winter	S31	11	138.948	0.048	12.3	0.0076	0.0000	OK

Link Event (Outflow)	US Node	Link	DS Node	Outflow (l/s)	Velocity (m/s)	Flow/Cap	Link Vol (m³)	Discharge Vol (m³)
15 minute winter	S24	16.001	S25	5.6	0.893	0.335	0.0706	
15 minute winter	S25	16.002	S26	5.6	0.826	0.270	0.1508	
15 minute winter	S26	16.003	MHS400	12.6	1.361	0.436	0.1937	
15 minute summer	MHS400	16.004	MHS401	12.3	0.406	0.240	0.6474	
15 minute winter	S32	17.000	MHS b	11.0	0.873	0.794	0.3291	
15 minute winter	MHS a	31.000	MHS 901	17.7	0.572	0.156	0.6214	
15 minute winter	MHS b	5.003	MHS 901	90.1	1.618	0.798	0.9693	
15 minute winter	MHS 902	5.005	AT Phase 1	105.9	2.011	0.384	1.9017	
15 minute summer	AT Phase 1	5.006	MHS 903	-9.6	-0.322	-0.038	1.3709	
15 minute summer	MHS 903	5.007	MHS109A	3.7	1.438	0.019	0.1029	
240 minute winter	S36A	32.000	MHS110	0.5	0.507	0.026	0.0137	
360 minute winter	S36B	33.000	MHS110	0.3	0.398	0.017	0.0123	
15 minute winter	MHS401	16.005	MHS402	28.2	1.622	1.750	0.1604	
15 minute winter	MHS402	16.006	MHS403	28.4	1.465	0.320	0.4633	
15 minute summer	RE14	18.000	S27	0.0	0.000	0.000	0.0827	
15 minute winter	S27	18.001	S28	5.6	0.580	0.339	0.1112	
15 minute summer	RE15	19.000	S28	0.0	0.000	0.000	0.1993	
15 minute winter	S28	18.002	S30	12.2	1.171	0.735	0.1184	
15 minute summer	RE16	20.000	S29	0.0	0.000	0.000	0.0000	
15 minute summer	S29	20.001	S30	0.0	0.000	0.000	0.0371	
15 minute winter	S30	18.003	S31	12.3	1.910	0.266	0.0097	
15 minute summer	RE17	21.000	S31	0.0	0.000	0.000	0.0819	
15 minute winter	S31	18.004	MHS403	12.3	1.937	0.217	0.0510	

Flow+ v12.0 Copyright © 1988-2025 Causeway Technologies Ltd

Results for 100 year Critical Storm Duration. Lowest mass balance: 99.10%

Node Event	US Node	Peak (mins)	Level (m)	Depth (m)	Inflow (l/s)	Node Vol (m³)	Flood (m³)	Status
15 minute winter	MHS403	11	138.169	0.069	56.2	0.0784	0.0000	OK
120 minute winter	MHS108	120	138.125	1.505	122.7	249.4953	0.0000	SURCHARGED
120 minute winter	S33	120	138.126	0.025	0.1	0.0040	0.0000	OK
120 minute winter	S34	120	138.125	0.445	3.0	0.0708	0.0000	SURCHARGED
120 minute winter	RE18	120	138.125	0.035	0.2	0.0006	0.0000	OK
120 minute winter	S35	120	138.125	0.555	6.0	0.0883	0.0000	SURCHARGED
120 minute winter	Attenuation Tank	120	138.125	1.425	16.6	0.0000	0.0000	SURCHARGED
600 minute winter	MHS109	615	136.464	0.104	16.8	0.1171	0.0000	OK
30 minute summer	MHS109A	109	136.230	0.130	20.5	0.1468	0.0000	OK
960 minute summer	MHS110	510	136.143	0.093	21.1	0.1052	0.0000	OK
960 minute summer	MHD204	510	136.052	0.074	21.1	0.0000	0.0000	OK
15 minute summer	RE19	1	139.600	0.000	0.0	0.0000	0.0000	OK
15 minute winter	S37	10	139.406	0.056	7.3	0.0088	0.0000	OK
15 minute summer	RE20	1	139.330	0.000	0.0	0.0000	0.0000	OK
15 minute winter	S38	10	139.155	0.055	14.5	0.0087	0.0000	OK

Link Event (Outflow)	US Node	Link	DS Node	Outflow (l/s)	Velocity (m/s)	Flow/Cap	Link Vol (m³)	Discharge Vol (m³)
15 minute winter	MHS403	16.007	MHS108	56.1	1.312	0.119	0.3452	
60 minute summer	MHS108	1.010	MHS109	16.8	1.002	0.354	0.5218	
120 minute winter	S33	22.000	S34	0.2	0.014	0.009	0.4148	
15 minute winter	S34	22.001	S35	7.8	0.810	0.451	0.1116	
120 minute winter	RE18	23.000	S35	-0.2	-0.019	-0.010	0.4333	
15 minute winter	S35	22.002	Attenuation Tank	15.6	1.176	0.636	0.4232	
15 minute winter	Attenuation Tank	22.003	MHS108	41.9	0.635	0.506	1.0075	
600 minute winter	MHS109	1.011	MHS109A	16.8	0.819	0.441	0.9994	
30 minute summer	MHS109A	1.012	MHS110	20.5	1.046	0.658	0.2699	
960 minute summer	MHS110	1.013	MHD204	21.1	1.579	0.235	0.0325	842.9
15 minute summer	RE19	25.000	S37	0.0	0.000	0.000	0.1011	
15 minute winter	S37	25.001	S38	7.2	1.219	0.269	0.0657	
15 minute summer	RE20	26.000	S38	0.0	0.000	0.000	0.0996	
15 minute winter	S38	25.002	MHS101	14.3	1.037	0.286	0.0970	

Flow+ v12.0 Copyright © 1988-2025 Causeway Technologies Ltd

Results for 100 year +20% CC Critical Storm Duration. Lowest mass balance: 99.10%

Node Event	US Node	Peak (mins)	Level (m)	Depth (m)	Inflow (l/s)	Node Vol (m³)	Flood (m³)	Status
15 minute summer	RE1	1	139.570	0.000	0.0	0.0000	0.0000	OK
15 minute winter	S1	10	139.456	0.056	6.8	0.0089	0.0000	OK
15 minute summer	RE2	1	139.620	0.000	0.0	0.0000	0.0000	OK
15 minute winter	S2	10	139.269	0.069	13.5	0.0110	0.0000	OK
15 minute winter	MHS100	13	139.168	0.468	17.6	0.8262	0.0000	SURCHARGED
15 minute summer	RE3	1	139.800	0.000	0.0	0.0000	0.0000	OK
15 minute winter	S3	10	139.740	0.040	3.4	0.0064	0.0000	OK
15 minute winter	S4	11	139.539	0.039	3.3	0.0061	0.0000	OK
15 minute summer	RE4	1	139.700	0.000	0.0	0.0000	0.0000	OK
15 minute winter	S5	10	139.602	0.052	5.4	0.0083	0.0000	OK
15 minute winter	S6	10	139.393	0.043	5.3	0.0068	0.0000	OK
15 minute winter	S7	13	139.245	0.195	17.3	0.0309	0.0000	SURCHARGED
15 minute winter	MHS101	13	139.160	0.710	64.4	1.2550	0.0000	SURCHARGED
15 minute winter	S8	10	138.790	0.060	8.3	0.0169	0.0000	OK
15 minute winter	MHS c	10	138.756	0.176	64.2	0.6088	0.0000	OK
360 minute winter	MHS 900	344	138.596	0.206	10.9	0.3648	0.0000	OK
360 minute winter	MHS 901	344	138.596	0.886	37.8	1.5660	0.0000	SURCHARGED
15 minute winter	MHS200	13	139.127	0.627	21.9	1.1073	0.0000	SURCHARGED
15 minute winter	RE5	14	139.465	0.034	0.9	0.0006	0.0000	OK
15 minute winter	S9	13	139.474	0.473	10.2	0.0753	0.0000	SURCHARGED
15 minute summer	RE6	1	139.440	0.000	0.0	0.0000	0.0000	OK
15 minute winter	S10	13	139.388	0.538	6.8	0.0856	0.0000	SURCHARGED
15 minute winter	S11	13	139.352	0.602	15.1	0.0957	0.0000	SURCHARGED
15 minute summer	RE7	1	139.770	0.000	0.0	0.0000	0.0000	OK
15 minute winter	S12	10	139.693	0.043	2.4	0.0068	0.0000	OK

Link Event (Outflow)	US Node	Link	DS Node	Outflow (l/s)	Velocity (m/s)	Flow/Cap	Link Vol (m³)	Discharge Vol (m³)
15 minute summer	RE1	1.000	S1	0.0	0.000	0.000	0.0737	
15 minute winter	S1	1.001	S2	6.7	0.984	0.285	0.0803	
15 minute summer	RE2	2.000	S2	0.0	0.000	0.000	0.0711	
15 minute winter	S2	1.002	MHS100	13.3	1.692	0.399	0.1786	
15 minute summer	MHS100	1.003	MHS101	17.8	0.432	0.159	1.7183	
15 minute summer	RE3	3.000	S3	0.0	0.000	0.000	0.0271	
15 minute winter	S3	3.001	S4	3.3	0.915	0.146	0.0443	
15 minute winter	S4	3.002	S7	3.3	0.531	0.145	0.2826	
15 minute summer	RE4	4.000	S5	0.0	0.000	0.000	0.0581	
15 minute winter	S5	4.001	S6	5.3	1.105	0.231	0.0579	
15 minute winter	S6	4.002	S7	5.2	0.806	0.179	0.1170	
15 minute winter	S7	4.003	MHS101	16.5	1.089	0.483	0.2890	
30 minute summer	MHS101	1.004	MHS102	55.9	1.007	0.531	1.1747	
15 minute winter	S8	5.000	MHS c	8.2	0.391	0.156	0.3051	
15 minute winter	MHS c	5.001	MHS 900	63.3	1.584	0.561	0.7352	
15 minute winter	MHS 900	5.002	MHS b	62.4	1.175	0.548	2.5022	
15 minute winter	MHS 901	5.004	MHS 902	127.1	1.505	0.377	1.0583	
15 minute summer	MHS200	30.000	MHS102	17.3	0.430	0.185	1.9810	
15 minute winter	RE5	6.000	S9	1.0	-0.188	0.143	0.1766	
15 minute summer	S9	6.001	S10	7.3	1.011	1.035	0.0864	
15 minute summer	RE6	7.000	S11	0.0	0.000	0.000	0.1154	
15 minute winter	S10	6.002	S11	8.1	1.037	0.934	0.0382	
15 minute winter	S11	6.003	MHS102	13.3	1.706	0.835	0.0513	
15 minute summer	RE7	8.000	S12	0.0	0.000	0.000	0.0153	
15 minute winter	S12	8.001	S13	2.4	0.838	0.349	0.0315	

Flow+ v12.0 Copyright © 1988-2025 Causeway Technologies Ltd

Results for 100 year +20% CC Critical Storm Duration. Lowest mass balance: 99.10%

Node Event	US Node	Peak (mins)	Level (m)	Depth (m)	Inflow (l/s)	Node Vol (m³)	Flood (m³)	Status
15 minute winter	S13	11	139.545	0.035	2.4	0.0056	0.0000	OK
15 minute winter	S14	10	139.466	0.026	4.7	0.0041	0.0000	OK
15 minute winter	MHS300	12	138.928	0.378	16.9	0.4273	0.0000	SURCHARGED
15 minute winter	MHS102	13	139.124	0.823	104.0	1.4551	0.0000	SURCHARGED
15 minute winter	MHS103	13	138.915	0.915	130.2	1.6172	0.0000	SURCHARGED
15 minute winter	MHS104	12	138.548	0.998	134.1	1.7629	0.0000	SURCHARGED
15 minute summer	RE8	1	139.320	0.000	0.0	0.0000	0.0000	OK
15 minute winter	S15	10	138.988	0.088	12.2	0.0141	0.0000	OK
15 minute summer	RE9	1	139.100	0.000	0.0	0.0000	0.0000	OK
15 minute winter	S16	11	138.829	0.079	32.8	0.0126	0.0000	OK
180 minute winter	MHS500	176	138.443	0.843	4.8	0.9530	0.0000	SURCHARGED
180 minute winter	MHS501	176	138.443	1.053	13.5	1.1905	0.0000	SURCHARGED
180 minute winter	MHS106	176	138.442	1.342	71.4	2.3720	0.0000	SURCHARGED
15 minute summer	S17	1	138.700	0.000	0.0	0.0000	0.0000	OK
15 minute summer	S18	1	138.560	0.000	0.0	0.0000	0.0000	OK
15 minute summer	RE10	1	138.700	0.000	0.0	0.0000	0.0000	OK
180 minute winter	S19	176	138.443	0.392	3.5	0.0624	0.0000	SURCHARGED
180 minute winter	S20	176	138.442	0.532	7.0	0.0847	0.0000	SURCHARGED
15 minute summer	RE11	1	139.450	0.000	0.0	0.0000	0.0000	OK
15 minute winter	S21	10	139.156	0.056	4.4	0.0088	0.0000	OK
15 minute winter	S22	11	138.948	0.048	4.3	0.0077	0.0000	OK
15 minute summer	RE12	1	138.940	0.000	0.0	0.0000	0.0000	OK
15 minute winter	S23	10	138.734	0.034	8.6	0.0054	0.0000	OK
180 minute winter	MHS107	176	138.442	1.512	80.1	2.6718	0.0000	SURCHARGED
15 minute summer	RE13	1	139.450	0.000	0.0	0.0000	0.0000	OK

Link Event (Outflow)	US Node	Link	DS Node	Outflow (l/s)	Velocity (m/s)	Flow/Cap	Link Vol (m³)	Discharge Vol (m³)
15 minute winter	S13	8.002	S14	2.4	0.918	0.101	0.0106	
15 minute winter	S14	8.003	MHS300	4.7	1.066	0.066	0.0542	
15 minute winter	MHS300	8.004	MHS103	12.9	0.438	0.177	1.1239	
15 minute winter	MHS102	1.005	MHS103	94.8	1.436	0.903	2.3661	
15 minute summer	MHS103	1.006	MHS104	108.8	1.563	0.873	2.5229	
15 minute winter	MHS104	1.007	MHS106	132.9	1.887	1.005	2.2464	
15 minute summer	RE8	9.000	S15	0.0	0.000	0.000	0.2734	
15 minute winter	S15	9.001	S16	11.9	1.223	0.576	0.1118	
15 minute summer	RE9	10.000	S16	0.0	0.000	0.000	0.2249	
15 minute winter	S16	9.002	MHS501	31.3	2.160	0.429	0.1110	
15 minute winter	MHS500	11.000	MHS501	15.8	0.782	0.300	0.8162	
15 minute winter	MHS501	9.003	MHS106	43.7	1.099	0.723	0.8564	
15 minute winter	MHS106	1.008	MHS107	180.7	1.694	0.644	0.9567	
15 minute summer	S17	12.000	S18	0.0	0.000	0.000	0.0000	
15 minute summer	S18	12.001	S20	0.0	0.000	0.000	0.3831	
15 minute summer	RE10	13.000	S19	0.0	0.000	0.000	0.2842	
15 minute winter	S19	13.001	S20	12.5	1.060	0.625	0.1528	
15 minute winter	S20	13.002	MHS107	22.4	1.334	0.540	0.3206	
15 minute summer	RE11	14.000	S21	0.0	0.000	0.000	0.0455	
15 minute winter	S21	14.001	S22	4.3	1.048	0.542	0.0479	
15 minute winter	S22	14.002	S23	4.3	1.415	0.391	0.0188	
15 minute summer	RE12	15.000	S23	0.0	0.000	0.000	0.0164	
15 minute winter	S23	14.003	MHS107	8.6	1.059	0.111	0.0984	
15 minute winter	MHS107	1.009	MHS108	206.8	1.875	1.080	3.7287	
15 minute summer	RE13	16.000	S24	0.0	0.000	0.000	0.0681	

Flow+ v12.0 Copyright © 1988-2025 Causeway Technologies Ltd

Results for 100 year +20% CC Critical Storm Duration. Lowest mass balance: 99.10%

Node Event	US Node	Peak (mins)	Level (m)	Depth (m)	Inflow (l/s)	Node Vol (m³)	Flood (m³)	Status
15 minute winter	S24	10	139.370	0.070	6.8	0.0111	0.0000	OK
15 minute winter	S25	11	139.258	0.058	6.7	0.0093	0.0000	OK
15 minute winter	S26	11	138.988	0.088	15.3	0.0140	0.0000	OK
15 minute winter	MHS400	12	138.865	0.365	14.9	0.4124	0.0000	SURCHARGED
15 minute winter	S32	11	138.763	0.123	13.6	0.0348	0.0000	OK
360 minute winter	MHS a	344	138.596	0.696	3.6	1.2302	0.0000	SURCHARGED
360 minute winter	MHS b	344	138.596	0.706	18.8	1.2482	0.0000	SURCHARGED
360 minute winter	MHS 902	344	138.596	0.986	19.3	1.7427	0.0000	SURCHARGED
360 minute winter	AT Phase 1	344	138.596	1.096	40.8	132.9147	0.0000	SURCHARGED
360 minute winter	MHS 903	344	138.596	1.156	8.4	2.9425	0.0000	SURCHARGED
480 minute winter	S36A	352	136.940	0.440	1.9	13.0248	0.0000	SURCHARGED
360 minute winter	S36B	288	136.764	0.444	1.8	11.0569	0.0000	SURCHARGED
15 minute winter	MHS401	12	138.846	0.516	35.3	0.9118	0.0000	SURCHARGED
180 minute winter	MHS402	176	138.441	0.191	10.7	0.2161	0.0000	OK
15 minute summer	RE14	1	139.530	0.000	0.0	0.0000	0.0000	OK
15 minute winter	S27	10	139.266	0.066	6.8	0.0105	0.0000	OK
15 minute summer	RE15	1	139.510	0.000	0.0	0.0000	0.0000	OK
15 minute winter	S28	11	139.215	0.115	15.0	0.0183	0.0000	OK
15 minute summer	RE16	1	139.690	0.000	0.0	0.0000	0.0000	OK
15 minute summer	S29	1	139.250	0.000	0.0	0.0000	0.0000	OK
15 minute winter	S30	11	139.079	0.079	14.6	0.0126	0.0000	OK
15 minute summer	RE17	1	139.340	0.000	0.0	0.0000	0.0000	OK
15 minute winter	S31	11	138.952	0.052	14.7	0.0083	0.0000	OK

Link Event (Outflow)	US Node	Link	DS Node	Outflow (l/s)	Velocity (m/s)	Flow/Cap	Link Vol (m³)	Discharge Vol (m³)
15 minute winter	S24	16.001	S25	6.7	0.935	0.399	0.0803	
15 minute winter	S25	16.002	S26	6.6	0.849	0.321	0.1912	
15 minute winter	S26	16.003	MHS400	14.9	1.414	0.513	0.2155	
15 minute winter	MHS400	16.004	MHS401	14.6	0.413	0.285	0.6939	
15 minute winter	S32	17.000	MHS b	13.1	0.909	0.948	0.3757	
15 minute winter	MHS a	31.000	MHS 901	21.2	0.616	0.187	0.7231	
15 minute winter	MHS b	5.003	MHS 901	107.4	1.671	0.951	1.1201	
15 minute winter	MHS 902	5.005	AT Phase 1	124.8	2.036	0.453	2.2155	
15 minute summer	AT Phase 1	5.006	MHS 903	-11.6	-0.342	-0.046	1.5064	
15 minute summer	MHS 903	5.007	MHS109A	3.7	1.399	0.019	0.1029	
480 minute winter	S36A	32.000	MHS110	0.6	0.522	0.028	0.0147	
360 minute winter	S36B	33.000	MHS110	0.4	0.410	0.019	0.0132	
15 minute winter	MHS401	16.005	MHS402	34.0	1.932	2.107	0.1666	
15 minute winter	MHS402	16.006	MHS403	34.1	1.547	0.385	0.5323	
15 minute summer	RE14	18.000	S27	0.0	0.000	0.000	0.0946	
15 minute winter	S27	18.001	S28	6.7	0.599	0.404	0.1271	
15 minute summer	RE15	19.000	S28	0.0	0.000	0.000	0.2283	
15 minute winter	S28	18.002	S30	14.6	1.209	0.879	0.1366	
15 minute summer	RE16	20.000	S29	0.0	0.000	0.000	0.0000	
15 minute summer	S29	20.001	S30	0.0	0.000	0.000	0.0431	
15 minute winter	S30	18.003	S31	14.7	1.978	0.318	0.0112	
15 minute summer	RE17	21.000	S31	0.0	0.000	0.000	0.0932	
15 minute winter	S31	18.004	MHS403	14.7	2.040	0.260	0.0579	

Flow+ v12.0 Copyright © 1988-2025 Causeway Technologies Ltd

Results for 100 year +20% CC Critical Storm Duration. Lowest mass balance: 99.10%

Node Event	US Node	Peak (mins)	Level (m)	Depth (m)	Inflow (l/s)	Node Vol (m³)	Flood (m³)	Status
180 minute winter	MHS403	176	138.441	0.341	20.7	0.3858	0.0000	SURCHARGED
180 minute winter	MHS108	176	138.441	1.821	111.2	319.2500	0.0000	SURCHARGED
180 minute winter	S33	176	138.441	0.341	1.2	0.0543	0.0000	SURCHARGED
180 minute winter	S34	176	138.441	0.761	2.7	0.1210	0.0000	SURCHARGED
180 minute winter	RE18	176	138.441	0.351	1.1	0.0063	0.0000	SURCHARGED
180 minute winter	S35	176	138.441	0.871	5.4	0.1385	0.0000	SURCHARGED
180 minute winter	Attenuation Tank	176	138.441	1.741	14.2	0.0000	0.0000	SURCHARGED
960 minute summer	MHS109	825	136.464	0.104	16.8	0.1171	0.0000	OK
180 minute winter	MHS109A	84	136.230	0.130	20.5	0.1468	0.0000	OK
960 minute winter	MHS110	480	136.143	0.093	21.1	0.1052	0.0000	OK
960 minute winter	MHD204	480	136.052	0.074	21.1	0.0000	0.0000	OK
15 minute summer	RE19	1	139.600	0.000	0.0	0.0000	0.0000	OK
15 minute winter	S37	10	139.412	0.062	8.8	0.0098	0.0000	OK
15 minute summer	RE20	1	139.330	0.000	0.0	0.0000	0.0000	OK
15 minute winter	S38	13	139.194	0.094	17.5	0.0149	0.0000	OK

Link Event (Outflow)	US Node	Link	DS Node	Outflow (l/s)	Velocity (m/s)	Flow/Cap	Link Vol (m³)	Discharge Vol (m³)
15 minute winter	MHS403	16.007	MHS108	68.1	1.341	0.145	0.3528	
15 minute summer	MHS108	1.010	MHS109	16.8	1.058	0.354	0.5218	
120 minute winter	S33	22.000	S34	-1.8	-0.133	-0.104	0.7459	
15 minute winter	S34	22.001	S35	9.5	0.840	0.546	0.1409	
120 minute winter	RE18	23.000	S35	-1.7	-0.114	-0.084	0.7355	
15 minute winter	S35	22.002	Attenuation Tank	18.2	1.207	0.740	0.5291	
15 minute winter	Attenuation Tank	22.003	MHS108	50.5	0.717	0.609	1.0075	
960 minute summer	MHS109	1.011	MHS109A	16.8	0.818	0.441	0.9995	
15 minute winter	MHS109A	1.012	MHS110	20.5	1.047	0.658	0.2699	
960 minute winter	MHS110	1.013	MHD204	21.1	1.579	0.235	0.0325	1048.5
15 minute summer	RE19	25.000	S37	0.0	0.000	0.000	0.1156	
15 minute winter	S37	25.001	S38	8.7	1.275	0.324	0.0900	
15 minute summer	RE20	26.000	S38	0.0	0.000	0.000	0.1285	
15 minute winter	S38	25.002	MHS101	16.9	1.189	0.338	0.1207	

Flow+ v12.0 Copyright © 1988-2025 Causeway Technologies Ltd

Results for 100 year +30% CC Critical Storm Duration. Lowest mass balance: 99.10%

Node Event	US Node	Peak (mins)	Level (m)	Depth (m)	Inflow (l/s)	Node Vol (m³)	Flood (m³)	Status
15 minute summer	RE1	1	139.570	0.000	0.0	0.0000	0.0000	OK
15 minute winter	S1	10	139.459	0.059	7.4	0.0094	0.0000	OK
15 minute summer	RE2	1	139.620	0.000	0.0	0.0000	0.0000	OK
15 minute winter	S2	13	139.378	0.177	14.7	0.0282	0.0000	SURCHARGED
15 minute winter	MHS100	13	139.326	0.626	22.2	1.1066	0.0000	SURCHARGED
15 minute summer	RE3	1	139.800	0.000	0.0	0.0000	0.0000	OK
15 minute winter	S3	10	139.742	0.042	3.7	0.0067	0.0000	OK
15 minute winter	S4	11	139.540	0.040	3.7	0.0064	0.0000	OK
15 minute summer	RE4	1	139.700	0.000	0.0	0.0000	0.0000	OK
15 minute winter	S5	10	139.604	0.054	5.8	0.0086	0.0000	OK
15 minute winter	S6	13	139.413	0.063	5.7	0.0101	0.0000	OK
15 minute winter	S7	13	139.401	0.351	18.7	0.0558	0.0000	SURCHARGED
15 minute winter	MHS101	13	139.319	0.869	64.0	1.5351	0.0000	SURCHARGED
15 minute winter	S8	10	138.792	0.062	9.0	0.0176	0.0000	OK
15 minute winter	MHS c	10	138.765	0.185	69.6	0.6424	0.0000	OK
360 minute winter	MHS 900	344	138.713	0.323	11.8	0.5703	0.0000	SURCHARGED
360 minute winter	MHS 901	344	138.713	1.002	36.4	1.7714	0.0000	SURCHARGED
15 minute winter	MHS200	13	139.286	0.786	21.2	1.3882	0.0000	SURCHARGED
15 minute winter	RE5	14	139.583	0.153	2.6	0.0028	0.0000	SURCHARGED
15 minute winter	S9	14	139.563	0.563	11.1	0.0896	0.0000	SURCHARGED
15 minute winter	RE6	14	139.473	0.033	1.0	0.0006	0.0000	OK
15 minute winter	S10	13	139.508	0.658	7.1	0.1047	0.0000	SURCHARGED
15 minute winter	S11	13	139.482	0.732	15.6	0.1164	0.0000	SURCHARGED
15 minute summer	RE7	1	139.770	0.000	0.0	0.0000	0.0000	OK
15 minute winter	S12	10	139.695	0.045	2.6	0.0072	0.0000	OK

Link Event (Outflow)	US Node	Link	DS Node	Outflow (l/s)	Velocity (m/s)	Flow/Cap	Link Vol (m³)	Discharge Vol (m³)
15 minute summer	RE1	1.000	S1	0.0	0.000	0.000	0.0781	
15 minute winter	S1	1.001	S2	7.3	0.990	0.310	0.1272	
15 minute summer	RE2	2.000	S2	0.0	0.000	0.000	0.0747	
15 minute winter	S2	1.002	MHS100	15.3	1.698	0.457	0.2520	
30 minute summer	MHS100	1.003	MHS101	-21.8	0.429	-0.194	1.7183	
15 minute summer	RE3	3.000	S3	0.0	0.000	0.000	0.0289	
15 minute winter	S3	3.001	S4	3.7	0.936	0.159	0.0471	
15 minute winter	S4	3.002	S7	3.6	0.526	0.159	0.2914	
15 minute summer	RE4	4.000	S5	0.0	0.000	0.000	0.0615	
15 minute winter	S5	4.001	S6	5.7	1.128	0.250	0.0663	
15 minute winter	S6	4.002	S7	5.7	0.806	0.194	0.1386	
15 minute winter	S7	4.003	MHS101	17.0	1.087	0.498	0.2890	
15 minute winter	MHS101	1.004	MHS102	60.5	1.001	0.574	1.1747	
15 minute winter	S8	5.000	MHS c	8.9	0.398	0.169	0.3214	
15 minute winter	MHS c	5.001	MHS 900	68.6	1.612	0.608	0.7829	
15 minute winter	MHS 900	5.002	MHS b	67.5	1.180	0.594	2.6227	
15 minute winter	MHS 901	5.004	MHS 902	137.1	1.518	0.407	1.2219	
30 minute summer	MHS200	30.000	MHS102	20.0	0.413	0.214	1.9810	
15 minute winter	RE5	6.000	S9	-2.6	-0.344	-0.392	0.2706	
30 minute summer	S9	6.001	S10	7.2	1.007	1.028	0.0864	
15 minute winter	RE6	7.000	S11	-1.0	-0.193	-0.103	0.1481	
15 minute winter	S10	6.002	S11	8.5	1.084	0.977	0.0382	
15 minute winter	S11	6.003	MHS102	13.7	1.748	0.856	0.0513	
15 minute summer	RE7	8.000	S12	0.0	0.000	0.000	0.0163	
15 minute winter	S12	8.001	S13	2.6	0.855	0.379	0.0335	

Flow+ v12.0 Copyright © 1988-2025 Causeway Technologies Ltd

Results for 100 year +30% CC Critical Storm Duration. Lowest mass balance: 99.10%

Node Event	US Node	Peak (mins)	Level (m)	Depth (m)	Inflow (l/s)	Node Vol (m³)	Flood (m³)	Status
15 minute winter	S13	11	139.547	0.037	2.6	0.0058	0.0000	OK
15 minute winter	S14	10	139.467	0.027	5.1	0.0043	0.0000	OK
15 minute winter	MHS300	12	139.089	0.539	14.1	0.6096	0.0000	SURCHARGED
15 minute winter	MHS102	13	139.280	0.980	112.0	1.7312	0.0000	SURCHARGED
15 minute winter	MHS103	12	139.071	1.071	111.4	1.8920	0.0000	SURCHARGED
180 minute winter	MHS104	176	138.890	1.340	62.0	2.3672	0.0000	SURCHARGED
15 minute summer	RE8	1	139.320	0.000	0.0	0.0000	0.0000	OK
15 minute winter	S15	10	138.993	0.093	13.2	0.0148	0.0000	OK
15 minute summer	RE9	1	139.100	0.000	0.0	0.0000	0.0000	OK
180 minute winter	S16	176	138.889	0.139	9.8	0.0221	0.0000	OK
180 minute winter	MHS500	176	138.888	1.288	5.2	1.4571	0.0000	SURCHARGED
180 minute winter	MHS501	176	138.888	1.498	14.5	1.6946	0.0000	SURCHARGED
180 minute winter	MHS106	176	138.888	1.788	77.0	3.1593	0.0000	SURCHARGED
180 minute winter	S17	176	138.889	0.188	0.4	0.0300	0.0000	SURCHARGED
180 minute winter	S18	176	138.889	0.328	1.5	0.0522	0.0000	SURCHARGED
180 minute winter	RE10	176	138.888	0.188	0.9	0.0034	0.0000	SURCHARGED
180 minute winter	S19	176	138.888	0.838	3.8	0.1333	0.0000	SURCHARGED
180 minute winter	S20	176	138.888	0.978	7.6	0.1555	0.0000	SURCHARGED
15 minute summer	RE11	1	139.450	0.000	0.0	0.0000	0.0000	OK
15 minute winter	S21	10	139.159	0.059	4.8	0.0094	0.0000	OK
15 minute winter	S22	11	138.951	0.051	4.7	0.0081	0.0000	OK
15 minute summer	RE12	1	138.940	0.000	0.0	0.0000	0.0000	OK
180 minute winter	S23	176	138.888	0.187	2.6	0.0298	0.0000	SURCHARGED
180 minute winter	MHS107	176	138.888	1.958	86.3	3.4589	0.0000	SURCHARGED
15 minute summer	RE13	1	139.450	0.000	0.0	0.0000	0.0000	OK

Link Event (Outflow)	US Node	Link	DS Node	Outflow (l/s)	Velocity (m/s)	Flow/Cap	Link Vol (m³)	Discharge Vol (m³)
15 minute winter	S13	8.002	S14	2.6	0.939	0.110	0.0113	
15 minute winter	S14	8.003	MHS300	5.1	1.071	0.071	0.0545	
15 minute summer	MHS300	8.004	MHS103	13.0	0.442	0.179	1.1239	
15 minute summer	MHS102	1.005	MHS103	97.8	1.422	0.932	2.3661	
15 minute winter	MHS103	1.006	MHS104	106.7	1.612	0.856	2.5229	
15 minute winter	MHS104	1.007	MHS106	138.8	1.972	1.051	2.2464	
15 minute summer	RE8	9.000	S15	0.0	0.000	0.000	0.2911	
15 minute winter	S15	9.001	S16	12.8	1.232	0.622	0.1247	
15 minute summer	RE9	10.000	S16	0.0	0.000	0.000	0.2619	
15 minute winter	S16	9.002	MHS501	34.1	2.199	0.467	0.1178	
15 minute summer	MHS500	11.000	MHS501	16.7	0.801	0.318	0.8162	
15 minute winter	MHS501	9.003	MHS106	47.7	1.200	0.790	0.8564	
15 minute winter	MHS106	1.008	MHS107	190.8	1.730	0.680	0.9567	
180 minute winter	S17	12.000	S18	0.4	0.037	0.021	0.1947	
120 minute winter	S18	12.001	S20	-1.8	-0.141	-0.092	0.9276	
180 minute winter	RE10	13.000	S19	1.1	0.093	0.055	0.9112	
15 minute winter	S19	13.001	S20	13.3	1.075	0.666	0.1920	
15 minute winter	S20	13.002	MHS107	23.4	1.347	0.564	0.3206	
15 minute summer	RE11	14.000	S21	0.0	0.000	0.000	0.0480	
15 minute winter	S21	14.001	S22	4.7	1.068	0.592	0.0514	
15 minute winter	S22	14.002	S23	4.7	1.447	0.427	0.0201	
15 minute summer	RE12	15.000	S23	0.0	0.000	0.000	0.0172	
15 minute winter	S23	14.003	MHS107	9.4	1.045	0.122	0.0994	
15 minute winter	MHS107	1.009	MHS108	215.1	1.951	1.123	3.7287	
15 minute summer	RE13	16.000	S24	0.0	0.000	0.000	0.0721	

Flow+ v12.0 Copyright © 1988-2025 Causeway Technologies Ltd

Results for 100 year +30% CC Critical Storm Duration. Lowest mass balance: 99.10%

Node Event	US Node	Peak (mins)	Level (m)	Depth (m)	Inflow (l/s)	Node Vol (m³)	Flood (m³)	Status
15 minute winter	S24	10	139.373	0.073	7.4	0.0117	0.0000	OK
15 minute winter	S25	11	139.261	0.061	7.3	0.0097	0.0000	OK
15 minute winter	S26	12	139.038	0.138	16.6	0.0220	0.0000	OK
15 minute winter	MHS400	11	138.927	0.427	15.0	0.4824	0.0000	SURCHARGED
15 minute winter	S32	11	138.777	0.137	14.8	0.0387	0.0000	OK
360 minute winter	MHS a	344	138.713	0.813	3.9	1.4357	0.0000	SURCHARGED
360 minute winter	MHS b	344	138.713	0.823	20.4	1.4536	0.0000	SURCHARGED
360 minute winter	MHS 902	344	138.713	1.102	23.4	1.9481	0.0000	SURCHARGED
360 minute winter	AT Phase 1	344	138.712	1.212	40.2	147.0081	0.0000	SURCHARGED
360 minute winter	MHS 903	344	138.712	1.272	9.0	3.2383	0.0000	SURCHARGED
360 minute winter	S36A	280	136.987	0.487	2.6	14.4328	0.0000	SURCHARGED
480 minute winter	S36B	368	136.803	0.483	1.6	12.0170	0.0000	SURCHARGED
15 minute winter	MHS401	11	138.911	0.581	37.2	1.0270	0.0000	SURCHARGED
180 minute winter	MHS402	176	138.886	0.636	11.6	0.7197	0.0000	SURCHARGED
15 minute summer	RE14	1	139.530	0.000	0.0	0.0000	0.0000	OK
15 minute winter	S27	10	139.269	0.069	7.4	0.0110	0.0000	OK
15 minute summer	RE15	1	139.510	0.000	0.0	0.0000	0.0000	OK
15 minute winter	S28	11	139.223	0.123	16.3	0.0196	0.0000	OK
15 minute summer	RE16	1	139.690	0.000	0.0	0.0000	0.0000	OK
15 minute summer	S29	1	139.250	0.000	0.0	0.0000	0.0000	OK
15 minute winter	S30	11	139.084	0.084	15.8	0.0133	0.0000	OK
15 minute summer	RE17	1	139.340	0.000	0.0	0.0000	0.0000	OK
15 minute winter	S31	11	138.955	0.054	15.9	0.0087	0.0000	OK

Link Event (Outflow)	US Node	Link	DS Node	Outflow (l/s)	Velocity (m/s)	Flow/Cap	Link Vol (m³)	Discharge Vol (m³)
15 minute winter	S24	16.001	S25	7.3	0.955	0.435	0.0857	
15 minute winter	S25	16.002	S26	7.2	0.839	0.350	0.2594	
15 minute summer	S26	16.003	MHS400	15.1	1.413	0.520	0.2258	
15 minute winter	MHS400	16.004	MHS401	16.7	0.420	0.326	0.6939	
15 minute winter	S32	17.000	MHS b	14.2	0.915	1.026	0.4013	
15 minute winter	MHS a	31.000	MHS 901	23.0	0.627	0.203	0.8615	
15 minute winter	MHS b	5.003	MHS 901	116.0	1.657	1.027	1.1732	
15 minute winter	MHS 902	5.005	AT Phase 1	134.4	2.049	0.487	2.3280	
15 minute summer	AT Phase 1	5.006	MHS 903	-12.6	-0.349	-0.049	1.5261	
15 minute summer	MHS 903	5.007	MHS109A	3.7	1.351	0.019	0.1030	
360 minute winter	S36A	32.000	MHS110	0.6	0.530	0.030	0.0153	
480 minute winter	S36B	33.000	MHS110	0.4	0.415	0.020	0.0136	
15 minute winter	MHS401	16.005	MHS402	36.0	2.047	2.233	0.1681	
15 minute winter	MHS402	16.006	MHS403	36.0	1.570	0.407	0.5559	
15 minute summer	RE14	18.000	S27	0.0	0.000	0.000	0.1000	
15 minute winter	S27	18.001	S28	7.3	0.609	0.440	0.1355	
15 minute summer	RE15	19.000	S28	0.0	0.000	0.000	0.2422	
15 minute winter	S28	18.002	S30	15.8	1.222	0.953	0.1458	
15 minute summer	RE16	20.000	S29	0.0	0.000	0.000	0.0000	
15 minute summer	S29	20.001	S30	0.0	0.000	0.000	0.0459	
15 minute winter	S30	18.003	S31	15.9	2.009	0.345	0.0119	
15 minute summer	RE17	21.000	S31	0.0	0.000	0.000	0.0983	
15 minute winter	S31	18.004	MHS403	15.9	2.103	0.282	0.0608	

Flow+ v12.0 Copyright © 1988-2025 Causeway Technologies Ltd

Results for 100 year +30% CC Critical Storm Duration. Lowest mass balance: 99.10%

Node Event	US Node	Peak (mins)	Level (m)	Depth (m)	Inflow (l/s)	Node Vol (m³)	Flood (m³)	Status
180 minute winter	MHS403	176	138.886	0.786	22.3	0.8893	0.0000	SURCHARGED
180 minute winter	MHS108	176	138.886	2.266	120.2	333.3607	0.0000	SURCHARGED
180 minute winter	S33	176	138.887	0.787	1.2	0.1252	0.0000	SURCHARGED
180 minute winter	S34	176	138.887	1.207	2.9	0.1919	0.0000	SURCHARGED
180 minute winter	RE18	176	138.887	0.797	1.3	0.0143	0.0000	SURCHARGED
180 minute winter	S35	176	138.887	1.317	5.6	0.2094	0.0000	SURCHARGED
180 minute winter	Attenuation Tank	176	138.886	2.186	14.3	0.0000	0.0000	SURCHARGED
15 minute summer	MHS109	95	136.464	0.104	16.8	0.1171	0.0000	OK
15 minute summer	MHS109A	94	136.230	0.130	20.5	0.1468	0.0000	OK
960 minute summer	MHS110	480	136.143	0.093	21.1	0.1052	0.0000	OK
960 minute summer	MHD204	480	136.052	0.074	21.1	0.0000	0.0000	OK
15 minute summer	RE19	1	139.600	0.000	0.0	0.0000	0.0000	OK
15 minute winter	S37	10	139.414	0.064	9.5	0.0102	0.0000	OK
15 minute winter	RE20	14	139.358	0.028	1.9	0.0005	0.0000	OK
15 minute winter	S38	13	139.362	0.262	18.9	0.0417	0.0000	SURCHARGED

Link Event (Outflow)	US Node	Link	DS Node	Outflow (l/s)	Velocity (m/s)	Flow/Cap	Link Vol (m³)	Discharge Vol (m³)
15 minute winter	MHS403	16.007	MHS108	73.0	1.427	0.155	0.3557	
30 minute winter	MHS108	1.010	MHS109	16.8	1.025	0.354	0.5218	
60 minute winter	S33	22.000	S34	-2.4	-0.158	-0.134	0.7459	
15 minute winter	S34	22.001	S35	10.4	0.840	0.598	0.1952	
120 minute winter	RE18	23.000	S35	-2.2	-0.140	-0.110	0.7355	
15 minute winter	S35	22.002	Attenuation Tank	19.1	1.181	0.777	0.5291	
15 minute winter	Attenuation Tank	22.003	MHS108	54.1	0.768	0.652	1.0075	
15 minute summer	MHS109	1.011	MHS109A	16.8	0.837	0.441	1.0003	
15 minute summer	MHS109A	1.012	MHS110	20.5	1.047	0.658	0.2699	
960 minute summer	MHS110	1.013	MHD204	21.1	1.579	0.235	0.0325	1018.3
15 minute summer	RE19	25.000	S37	0.0	0.000	0.000	0.1228	
15 minute winter	S37	25.001	S38	9.4	1.267	0.353	0.1310	
15 minute winter	RE20	26.000	S38	-1.9	-0.166	-0.131	0.3494	
15 minute winter	S38	25.002	MHS101	17.2	1.192	0.344	0.1457	

Flow+ v12.0 Copyright © 1988-2025 Causeway Technologies Ltd

Results for 100 year +45% CC Critical Storm Duration. Lowest mass balance: 99.10%

Node Event	US Node	Peak (mins)	Level (m)	Depth (m)	Inflow (l/s)	Node Vol (m³)	Flood (m³)	Status
180 minute winter	RE1	176	139.618	0.048	0.3	0.0009	0.0000	OK
180 minute winter	S1	176	139.618	0.218	2.3	0.0346	0.0000	SURCHARGED
15 minute summer	RE2	1	139.620	0.000	0.0	0.0000	0.0000	OK
180 minute winter	S2	176	139.618	0.418	4.6	0.0664	0.0000	SURCHARGED
180 minute winter	MHS100	176	139.617	0.917	4.6	1.6209	0.0000	SURCHARGED
15 minute summer	RE3	1	139.800	0.000	0.0	0.0000	0.0000	OK
15 minute winter	S3	10	139.744	0.044	4.1	0.0071	0.0000	OK
180 minute winter	S4	176	139.618	0.118	1.1	0.0188	0.0000	OK
15 minute summer	RE4	1	139.700	0.000	0.0	0.0000	0.0000	OK
180 minute winter	S5	176	139.617	0.067	1.8	0.0107	0.0000	OK
180 minute winter	S6	176	139.618	0.267	1.8	0.0425	0.0000	SURCHARGED
180 minute winter	S7	176	139.618	0.568	5.8	0.0903	0.0000	SURCHARGED
180 minute winter	MHS101	176	139.617	1.167	22.2	2.0626	0.0000	SURCHARGED
360 minute winter	S8	344	138.884	0.154	1.7	0.0435	0.0000	OK
360 minute winter	MHS c	344	138.884	0.304	13.1	1.0519	0.0000	SURCHARGED
360 minute winter	MHS 900	344	138.884	0.494	13.1	0.8722	0.0000	SURCHARGED
360 minute winter	MHS 901	344	138.883	1.173	35.8	2.0733	0.0000	SURCHARGED
180 minute winter	MHS200	176	139.617	1.117	7.8	1.9738	0.0000	SURCHARGED
15 minute winter	RE5	14	139.770	0.340	3.8	0.0061	0.0000	SURCHARGED
15 minute winter	S9	14	139.759	0.759	12.4	0.1206	0.0000	SURCHARGED
15 minute winter	RE6	14	139.659	0.219	2.8	0.0039	0.0000	SURCHARGED
15 minute winter	S10	14	139.681	0.831	7.3	0.1321	0.0000	SURCHARGED
15 minute winter	S11	14	139.643	0.892	16.0	0.1419	0.0000	SURCHARGED
15 minute summer	RE7	1	139.770	0.000	0.0	0.0000	0.0000	OK
15 minute winter	S12	10	139.698	0.048	2.9	0.0076	0.0000	OK

Link Event (Outflow)	US Node	Link	DS Node	Outflow (l/s)	Velocity (m/s)	Flow/Cap	Link Vol (m³)	Discharge Vol (m³)
180 minute winter	RE1	1.000	S1	-0.3	-0.027	-0.020	0.2842	
15 minute winter	S1	1.001	S2	8.1	1.025	0.344	0.2030	
15 minute summer	RE2	2.000	S2	0.0	0.000	0.000	0.0991	
15 minute summer	S2	1.002	MHS100	15.8	1.731	0.474	0.2520	
15 minute winter	MHS100	1.003	MHS101	22.0	0.425	0.195	1.7183	
15 minute summer	RE3	3.000	S3	0.0	0.000	0.000	0.0312	
15 minute winter	S3	3.001	S4	4.1	0.963	0.177	0.0819	
15 minute winter	S4	3.002	S7	4.1	0.536	0.181	0.3874	
15 minute summer	RE4	4.000	S5	0.0	0.000	0.000	0.0671	
15 minute winter	S5	4.001	S6	6.4	1.161	0.279	0.1370	
15 minute winter	S6	4.002	S7	6.3	0.827	0.217	0.1976	
15 minute winter	S7	4.003	MHS101	17.8	1.165	0.523	0.2890	
15 minute summer	MHS101	1.004	MHS102	61.4	0.995	0.583	1.1747	
15 minute winter	S8	5.000	MHS c	9.9	0.406	0.188	0.3434	
15 minute winter	MHS c	5.001	MHS 900	76.5	1.648	0.678	0.8534	
15 minute winter	MHS 900	5.002	MHS b	75.3	1.188	0.662	2.7048	
15 minute winter	MHS 901	5.004	MHS 902	152.9	1.533	0.454	1.3525	
15 minute summer	MHS200	30.000	MHS102	26.2	0.442	0.280	1.9810	
15 minute winter	RE5	6.000	S9	-3.8	-0.491	-0.569	0.2706	
15 minute winter	S9	6.001	S10	7.3	1.005	1.039	0.0864	
15 minute winter	RE6	7.000	S11	-2.8	-0.455	-0.297	0.2308	
15 minute winter	S10	6.002	S11	8.8	1.208	1.015	0.0382	
15 minute winter	S11	6.003	MHS102	14.1	1.806	0.884	0.0513	
15 minute summer	RE7	8.000	S12	0.0	0.000	0.000	0.0178	
15 minute winter	S12	8.001	S13	2.9	0.880	0.423	0.0363	

Flow+ v12.0 Copyright © 1988-2025 Causeway Technologies Ltd

Results for 100 year +45% CC Critical Storm Duration. Lowest mass balance: 99.10%

Node Event	US Node	Peak (mins)	Level (m)	Depth (m)	Inflow (l/s)	Node Vol (m³)	Flood (m³)	Status
180 minute winter	S13	176	139.616	0.106	0.8	0.0169	0.0000	OK
180 minute winter	S14	176	139.616	0.176	1.6	0.0280	0.0000	SURCHARGED
180 minute winter	MHS300	176	139.616	1.066	4.4	1.2057	0.0000	SURCHARGED
180 minute winter	MHS102	176	139.617	1.317	42.2	2.3272	0.0000	SURCHARGED
180 minute winter	MHS103	176	139.616	1.616	55.0	2.8555	0.0000	SURCHARGED
180 minute winter	MHS104	176	139.614	2.064	65.5	3.6475	0.0000	SURCHARGED
180 minute winter	RE8	176	139.613	0.293	1.6	0.0053	0.0000	SURCHARGED
180 minute winter	S15	176	139.613	0.713	4.1	0.1134	0.0000	SURCHARGED
180 minute winter	RE9	176	139.613	0.513	2.4	0.0092	0.0000	SURCHARGED
180 minute winter	S16	176	139.613	0.863	11.1	0.1372	0.0000	SURCHARGED
180 minute winter	MHS500	176	139.612	2.012	5.8	2.2758	0.0000	FLOOD RISK
180 minute winter	MHS501	176	139.612	2.222	16.3	2.5133	0.0000	SURCHARGED
180 minute winter	MHS106	176	139.612	2.512	82.9	4.4383	0.0000	SURCHARGED
180 minute winter	S17	176	139.612	0.912	1.7	0.1450	0.0000	FLOOD RISK
180 minute winter	S18	176	139.612	1.052	6.3	0.1673	0.0000	FLOOD RISK
180 minute winter	RE10	176	139.612	0.912	0.4	0.0164	0.0000	FLOOD RISK
180 minute winter	S19	176	139.612	1.562	4.2	0.2484	0.0000	FLOOD RISK
180 minute winter	S20	176	139.612	1.702	8.4	0.2706	0.0000	FLOOD RISK
180 minute winter	RE11	176	139.612	0.162	0.2	0.0029	0.0000	SURCHARGED
180 minute winter	S21	176	139.612	0.512	1.5	0.0814	0.0000	SURCHARGED
180 minute winter	S22	176	139.612	0.712	1.7	0.1131	0.0000	SURCHARGED
180 minute winter	RE12	176	139.611	0.671	1.1	0.0121	0.0000	SURCHARGED
180 minute winter	S23	176	139.611	0.911	3.5	0.1449	0.0000	SURCHARGED
180 minute winter	MHS107	176	139.611	2.681	92.5	4.7377	0.0000	FLOOD RISK
180 minute winter	RE13	176	139.612	0.162	0.2	0.0029	0.0000	SURCHARGED

Link Event (Outflow)	US Node	Link	DS Node	Outflow (l/s)	Velocity (m/s)	Flow/Cap	Link Vol (m³)	Discharge Vol (m³)
15 minute winter	S13	8.002	S14	2.9	0.968	0.123	0.0123	
15 minute winter	S14	8.003	MHS300	5.7	1.104	0.079	0.0550	
30 minute summer	MHS300	8.004	MHS103	14.3	0.416	0.197	1.1239	
30 minute winter	MHS102	1.005	MHS103	90.1	1.443	0.859	2.3661	
15 minute winter	MHS103	1.006	MHS104	109.8	1.576	0.881	2.5229	
15 minute winter	MHS104	1.007	MHS106	145.8	2.071	1.104	2.2464	
180 minute winter	RE8	9.000	S15	-1.6	-0.132	-0.100	0.9233	
15 minute winter	S15	9.001	S16	14.3	1.246	0.692	0.1495	
180 minute winter	RE9	10.000	S16	-2.4	-0.193	-0.163	0.9233	
15 minute winter	S16	9.002	MHS501	37.5	2.290	0.513	0.1313	
15 minute winter	MHS500	11.000	MHS501	17.1	0.762	0.325	0.8162	
15 minute winter	MHS501	9.003	MHS106	50.9	1.281	0.843	0.8564	
15 minute winter	MHS106	1.008	MHS107	203.9	1.849	0.727	0.9567	
360 minute winter	S17	12.000	S18	-2.4	-0.198	-0.120	0.1947	
120 minute winter	S18	12.001	S20	-7.0	-0.396	-0.353	0.9276	
120 minute winter	RE10	13.000	S19	-4.7	-0.265	-0.234	0.9112	
15 minute summer	S19	13.001	S20	14.3	1.071	0.720	0.1965	
15 minute winter	S20	13.002	MHS107	23.5	1.391	0.566	0.3206	
180 minute winter	RE11	14.000	S21	0.4	0.068	0.052	0.1641	
15 minute winter	S21	14.001	S22	5.2	1.090	0.655	0.0557	
15 minute winter	S22	14.002	S23	5.2	1.483	0.473	0.0217	
120 minute winter	RE12	15.000	S23	-1.7	-0.238	-0.218	0.1135	
15 minute winter	S23	14.003	MHS107	10.4	1.109	0.134	0.1005	
15 minute winter	MHS107	1.009	MHS108	229.2	2.079	1.197	3.7287	
240 minute winter	RE13	16.000	S24	0.4	0.038	0.027	0.3062	

Flow+ v12.0 Copyright © 1988-2025 Causeway Technologies Ltd

Results for 100 year +45% CC Critical Storm Duration. Lowest mass balance: 99.10%

Node Event	US Node	Peak (mins)	Level (m)	Depth (m)	Inflow (l/s)	Node Vol (m³)	Flood (m³)	Status
180 minute winter	S24	176	139.612	0.312	2.3	0.0495	0.0000	SURCHARGED
180 minute winter	S25	176	139.612	0.411	2.3	0.0654	0.0000	SURCHARGED
180 minute winter	S26	176	139.611	0.711	5.2	0.1131	0.0000	SURCHARGED
180 minute winter	MHS400	176	139.611	1.111	5.2	1.2565	0.0000	SURCHARGED
360 minute winter	S32	344	138.884	0.244	2.8	0.0690	0.0000	SURCHARGED
360 minute winter	MHS a	344	138.883	0.983	4.4	1.7376	0.0000	SURCHARGED
360 minute winter	MHS b	344	138.884	0.994	22.6	1.7556	0.0000	SURCHARGED
360 minute winter	MHS 902	344	138.883	1.273	53.6	2.2500	0.0000	SURCHARGED
360 minute winter	AT Phase 1	344	138.883	1.383	37.8	167.7295	0.0000	SURCHARGED
360 minute winter	MHS 903	344	138.883	1.443	8.8	3.6732	0.0000	SURCHARGED
360 minute winter	S36A	248	137.620	1.120	2.9	15.5310	0.1778	FLOOD
360 minute winter	S36B	272	137.493	1.173	2.2	13.2137	0.0000	FLOOD RISK
180 minute winter	MHS401	176	139.611	1.281	13.0	2.2634	0.0000	SURCHARGED
180 minute winter	MHS402	176	139.610	1.360	13.0	1.5378	0.0000	SURCHARGED
180 minute winter	RE14	176	139.610	0.080	0.2	0.0014	0.0000	OK
180 minute winter	S27	176	139.610	0.410	2.3	0.0652	0.0000	SURCHARGED
180 minute winter	RE15	176	139.610	0.100	0.3	0.0018	0.0000	OK
180 minute winter	S28	176	139.610	0.510	5.1	0.0811	0.0000	SURCHARGED
15 minute summer	RE16	1	139.690	0.000	0.0	0.0000	0.0000	OK
180 minute winter	S29	176	139.610	0.360	1.2	0.0572	0.0000	SURCHARGED
180 minute winter	S30	176	139.610	0.610	5.1	0.0970	0.0000	SURCHARGED
180 minute winter	RE17	176	139.610	0.270	0.8	0.0049	0.0000	SURCHARGED
180 minute winter	S31	176	139.610	0.710	5.1	0.1129	0.0000	SURCHARGED

Link Event (Outflow)	US Node	Link	DS Node	Outflow (l/s)	Velocity (m/s)	Flow/Cap	Link Vol (m³)	Discharge Vol (m³)
15 minute winter	S24	16.001	S25	8.1	0.980	0.483	0.0927	
15 minute winter	S25	16.002	S26	8.0	0.851	0.388	0.2780	
15 minute winter	S26	16.003	MHS400	16.1	1.366	0.557	0.2673	
15 minute winter	MHS400	16.004	MHS401	18.6	0.468	0.362	0.6939	
15 minute winter	S32	17.000	MHS b	15.8	0.919	1.137	0.4206	
15 minute winter	MHS a	31.000	MHS 901	25.7	0.643	0.226	1.0156	
15 minute winter	MHS b	5.003	MHS 901	129.2	1.835	1.143	1.2085	
15 minute winter	MHS 902	5.005	AT Phase 1	150.2	2.080	0.545	2.3896	
15 minute winter	AT Phase 1	5.006	MHS 903	-14.4	-0.344	-0.057	1.5261	
360 minute winter	MHS 903	5.007	MHS109A	3.9	0.797	0.020	0.1082	
240 minute winter	S36A	32.000	MHS110	1.0	0.602	0.046	0.0206	
360 minute winter	S36B	33.000	MHS110	0.6	0.474	0.031	0.0187	
15 minute winter	MHS401	16.005	MHS402	39.4	2.239	2.442	0.1700	
15 minute winter	MHS402	16.006	MHS403	39.5	1.590	0.446	0.6005	
180 minute winter	RE14	18.000	S27	0.4	0.033	0.022	0.3548	
15 minute winter	S27	18.001	S28	8.1	0.621	0.489	0.1474	
180 minute winter	RE15	19.000	S28	0.7	0.060	0.034	0.4889	
15 minute winter	S28	18.002	S30	17.6	1.228	1.059	0.1592	
15 minute summer	RE16	20.000	S29	0.0	0.000	0.000	0.0000	
240 minute winter	S29	20.001	S30	-1.6	-0.107	-0.055	0.1666	
15 minute winter	S30	18.003	S31	17.6	2.047	0.382	0.0129	
120 minute winter	RE17	21.000	S31	-0.8	-0.072	-0.042	0.5659	
15 minute winter	S31	18.004	MHS403	17.7	2.155	0.312	0.0658	

Flow+ v12.0 Copyright © 1988-2025 Causeway Technologies Ltd

Results for 100 year +45% CC Critical Storm Duration. Lowest mass balance: 99.10%

Node Event	US Node	Peak (mins)	Level (m)	Depth (m)	Inflow (l/s)	Node Vol (m³)	Flood (m³)	Status
180 minute winter	MHS403	176	139.610	1.510	25.1	1.7074	0.0000	SURCHARGED
180 minute winter	MHS108	176	139.610	2.989	130.5	335.2015	0.0000	SURCHARGED
180 minute winter	S33	176	139.610	1.510	2.4	0.2402	0.0000	SURCHARGED
180 minute winter	S34	176	139.610	1.930	3.6	0.3069	0.0000	SURCHARGED
180 minute winter	RE18	176	139.610	1.520	2.1	0.0274	0.0000	SURCHARGED
180 minute winter	S35	176	139.610	2.040	5.8	0.3244	0.0000	SURCHARGED
180 minute winter	Attenuation Tank	176	139.610	2.910	15.3	0.0000	0.0000	SURCHARGED
180 minute winter	MHS109	176	136.469	0.109	18.2	0.1228	0.0000	OK
240 minute winter	MHS109A	232	136.236	0.136	22.0	0.1537	0.0000	OK
180 minute winter	MHS110	176	136.149	0.099	23.3	0.1118	0.0000	OK
180 minute winter	MHD204	176	136.056	0.078	23.3	0.0000	0.0000	OK
180 minute winter	RE19	176	139.618	0.018	0.1	0.0003	0.0000	OK
180 minute winter	S37	176	139.618	0.268	2.9	0.0426	0.0000	SURCHARGED
180 minute winter	RE20	176	139.618	0.288	1.4	0.0052	0.0000	SURCHARGED
180 minute winter	S38	176	139.618	0.518	5.8	0.0823	0.0000	SURCHARGED

Link Event (Outflow)	US Node	Link	DS Node	Outflow (l/s)	Velocity (m/s)	Flow/Cap	Link Vol (m³)	Discharge Vol (m³)
15 minute winter	MHS403	16.007	MHS108	79.5	1.533	0.169	0.3624	
180 minute winter	MHS108	1.010	MHS109	18.2	1.023	0.384	0.5556	
120 minute winter	S33	22.000	S34	-3.9	-0.223	-0.222	0.7459	
15 minute winter	S34	22.001	S35	11.6	0.856	0.667	0.2033	
120 minute winter	RE18	23.000	S35	-3.6	-0.206	-0.183	0.7355	
15 minute summer	S35	22.002	Attenuation Tank	20.2	1.182	0.823	0.5291	
15 minute winter	Attenuation Tank	22.003	MHS108	59.8	0.849	0.721	1.0075	
180 minute winter	MHS109	1.011	MHS109A	18.2	0.828	0.479	1.0599	
240 minute winter	MHS109A	1.012	MHS110	22.0	1.054	0.708	0.2885	
180 minute winter	MHS110	1.013	MHD204	23.3	1.615	0.259	0.0351	478.5
180 minute winter	RE19	25.000	S37	-0.1	0.018	-0.008	0.3310	
15 minute winter	S37	25.001	S38	10.6	1.304	0.397	0.1962	
15 minute winter	RE20	26.000	S38	-6.3	-0.433	-0.442	0.6193	
15 minute winter	S38	25.002	MHS101	18.9	1.309	0.377	0.1457	

Flow+ v12.0 Copyright © 1988-2025 Causeway Technologies Ltd

boothking

Booth King Partnership Ltd.
Company No. 06206269

Head Office (Ramsbottom)
Tollgate House 9C/D, Bridge Street, Ramsbottom BL0 9AB
01706 822 022
office@booth-king.co.uk

Manchester Office
First Floor, Calico, 55 Mosley Street, Manchester M2 3HQ
0161 694 7087
manchester@booth-king.co.uk

Edinburgh Office
54 Warrender Park Road, Edinburgh EH9 1HH
0131 229 1547
edinburgh@booth-king.co.uk