EG Group Ltd

Proposed Mixed-Use Development, A6193, Kingsway Business Park, Rochdale

Transport Assessment

3705023

DYNAMIC TRANSPORT PLANNING

OCTOBER 2023

Report Details

Report Number: 3705023-TA

Report Title: Transport Assessment, Proposed Mixed-Use Development, A6193, Kingsway Business Park, Rochdale

Client: EG Group Ltd

Date: 16 October 2023

Status:

Dynamic Transport Planning Ltd (DTP) has prepared this report for the use of our client for the intended purposes as stated in the agreement under which this work was undertaken. This report should not be relied on by any third party without the written agreement of DTP and the client.

Where data is used which is supplied by the client or other parties it is assumed that the information is correct. No responsibility can be accepted by DTP for errors or inconsistencies in the data supplied by external sources.

It is not permitted for any sections of this report to be copied or duplicated without the written permission of DTP and the client for who it was prepared.

www.dynamictransportplanning.co.uk – enquiries@dynamictransportplanning.co.uk

Contents

1	**Introduction**	**3**
1.1	*General*	*3*
1.2	*Site Location*	*3*
1.3	*Previous Planning History & Context*	*4*
1.4	*Purpose and Structure of Report*	*5*
2	**Policy Context**	**6**
2.1	*General*	*6*
2.2	*National Policy*	*6*
2.2.1	National Planning Policy Framework (NPPF), 2023	6
2.3	*Local Policy*	*7*
2.3.1	Rochdale Adopted Core Strategy (2016)	7
2.4	*Consideration of the Application Site against Policy Background*	*9*
3	**Existing Conditions**	**10**
3.1	*General*	*10*
3.2	*Surrounding Highway Network*	*10*
3.2.1	Wallis Avenue	10
3.2.2	Michael Faraday Avenue	10
3.3	*Baseline Traffic Data*	*11*
3.4	*Road Safety*	*11*
4	**Proposed Development**	**12**
4.1	*General*	*12*
4.2	*Proposed Site Access and Internal Arrangements*	*12*
4.3	*Parking Provision*	*13*
5	**Access by Non-Car Modes**	**15**
5.1	*General*	*15*
5.2	*Pedestrian Access*	*15*
5.3	*Cycle Access*	*16*
5.4	*Public Transport Access*	*17*
5.4.1	Bus	17
5.4.2	Train and Light Rail	17
5.5	*Accessibility Summary*	*17*
6	**Development Trip Generation**	**18**
6.1	*General*	*18*
6.2	*Trip Generation*	*18*
6.2.1	Trip Generation – Petrol Filling Station	18
6.2.2	Trip Generation – Proposed Drive-Thru Units	19
6.2.3	Combined Trip Generation	20
6.3	*Trip Generation – Previous Approval*	*20*
6.4	*Trip Types & Trip Distribution*	*21*
7	**Anticipated Highway Impacts**	**23**
7.1	*Baseline Traffic Data*	*23*
7.2	*Assessment Scenarios*	*23*
7.3	*Assessment Methodology*	*24*
7.4	*Sir Isaac Newton Way/Michael Faraday Avenue Roundabout*	*25*
7.5	*Michael Faraday Avenue/ Wallis Avenue/Warehouse Access Junction*	*26*
8	**Summary and Conclusions**	**28**

Appendix 1 Traffic Survey Data **30**

Appendix 2 Proposed Site Layout **31**

Appendix 3 Swept Path Assessment **32**

Appendix 4 TRICS Output Report **33**

Appendix 5 Traffic Figures **34**

Appendix 6 Model Output Reports **35**

1 Introduction

1.1 General

Dynamic Transport Planning Ltd is instructed by EG Group Ltd to report on the anticipated highways and transportation considerations related with the proposed mixed-use development of a Petrol Filling Station (PFS), drive-thru coffee shop, drive-thru restaurant and associated parking provision on land off Sir Isaac Newton Way, Kingsway Business Park, Rochdale.

This Transport Assessment (TA) has been produced to advise Rochdale Borough Council (RBC) as the Local Planning and Highway Authority and Transport for Greater Manchester (TfGM) on the transport planning considerations associated with the proposed development.

1.2 Site Location

The site is located to the north-west of the Kingsway Business Park area, situated approximately 1.5km to the south-east of Rochdale Town Centre and 16km to the north-east of Manchester City Centre. The location of the site is illustrated at **Figure 1.1**:

Figure 1.1: Site Location Plan

1.3 Previous Planning History & Context

The site is located to the north-east of Kingsway Business Park which is allocated as an employment site in the Rochdale Local Plan (AL/EMP/1), where both the business park and current development site have been subject to historical planning applications.

An original outline application was approved for the development of Kingsway Business Park site in 2000, (ref. 98/D35130), where a total area of 338,623m² Gross Floor Area (GFA) was proposed to house a mixture of industrial, retail, residential and leisure developments.

In 2009 a further outline application was approved (ref. 09/D52264), which provided an update the previous outline application, where some of the original proposed developments had been completed.

A further update to the outline application was approved in 2014, (ref. 14/00542/OUT) where the schedule for the development of the site was updated. The latest outline application updated the anticipated trip generation associated with the proposed developments which indicated an overall reduction of expected vehicle trips to the business park area.

As part of the most recent approved application for the business park a 'Parameters Plan' map and 'Illustrative Masterplan' map were submitted which highlighted the current proposed development site as 'Plot U2' which has been allocated within the employment area as a site intended for a residential development or a mixed-use retail/leisure development.

In 2022 a planning application (ref. 22/01200/FUL) for a different plot, also part of the wider business park (referenced as plot J2 on the 2014 parameters plan) was submitted for two employment units.

A formal pre-application submission was undertaken with RBC which included a highways scoping note, which was also made available to TfGM. RMC provided comments regarding the pre-application on 31st July 2023, including comments made by TfGM concerning the highways impact of the proposals, which are summarised below:

- Kingsway Business Park is subject to numerous planning permissions, supported by approved TA's, any future TA supporting the current proposals must reference these approvals in terms of trip generation and impacts on the adopted highway network;
- Taking into account the location of the development, any future TA must provide a realistic trip rate for the development as a whole, with foodstore generating single trips.

- Access to the site will be taken via priority junctions from Michael Faraday Avenue, where the TA is to provide full assessment of any impact on these junctions;

- Parking provisions for the different uses at the development must reflect current Council Parking Standards

- The servicing arrangements for each element of the development must be supported by a swept path analysis, including a 16.5m articulated vehicle for the food store; and

- Any future application is to be supported by a Travel Plan.

Since the undertaking of pre-application scoping discussions elements of the development proposals have been revised, where the discount foodstore is to be replaced by a PFS and associated retail unit alongside the previous two drive-thru units. As such, this TA will address the comments raised by RBC during pre-application discussions where relevant to the revised proposals.

1.4 Purpose and Structure of Report

Therefore, the purpose of this report is to examine the development proposals in the context of the application site, review the layout proposals including swept-path analysis, calculate the trip generating potential of the proposed development and review the accessibility of the site by all modes of transport.

In accordance with best practice this Transport Assessment (TA) has been prepared in reference to the Department for Transport's (DfTs) "*Guidance on Transport Assessment*" document.

This report is structured as follows:

- Section 2 provides a reference to relevant planning policy;
- Section 3 sets out the existing conditions of and around the application site;
- Section 4 provides a description of the proposed development;
- Section 5 assesses sustainable access options;
- Section 6 assesses the trip generating potential of the development and trip distribution;
- Section 7 provides the junction capacity assessments; and
- Section 8 presents the summary and conclusions.

2 Policy Context

2.1 General

It is necessary to understand the national and local transport-related planning policies applicable to the development proposals. Therefore, the following chapter sets out key policies and demonstrates how the proposals accord with them.

2.2 National Policy

2.2.1 National Planning Policy Framework (NPPF), 2023

In September 2023, the Ministry of Housing, Communities and Local Government published the revised National Planning Policy Framework (NPPF) which is the latest revision of the NPPF. The NPPF sets out the government's planning policies for England and how the policies should be applied to various developments, providing a framework for localised plans to be provided.

Paragraph 104 of the latest NPPF discusses the key link between new developments and the transport network, stating that transport issues should be considered from the earliest stages of the planning process so that:

- The potential impacts of any development can be assessed;
- Opportunities for changing transport technologies and usage are realised - with particular relation to scale;
- Opportunities to promote walking, cycling and public transport use are identified and pursued;
- Environmental impacts of traffic and transport infrastructure can be identified and assessed – allowing time to mitigate, manage and improve; and
- Patterns of movement – streets, parking and other transport consideration are integral to the design of schemes and contribute to making high quality places.

Sustainability of developments is discussed in paragraph 105, whereby developments should limit the need to travel by car and offer a genuine choice of transport modes to reduce congestion, stress on highway networks and overall emissions. This can be achieved by centring new developments around existing infrastructure to reduce the need to travel to access services.

Paragraph 110 of the new NPPF states that when assessing sites that may be allocated for development in plans, or specific applications for development, it should be ensured that:

- Appropriate opportunities to promote sustainable transport modes can be – or have been – taken up, given the type of development and its location;

- Safe and suitable access to the site can be achieved for all users;

- The design of streets, parking areas, other transport elements and the content of associated standards reflects current national guidance, including the National Design Guide and the National Model Design Code 45; and

- Any significant impacts from the development on the transport network (in terms of capacity and congestion), or on highway safety, can be cost effectively mitigated to an acceptable degree.

Paragraph 111 of the NPPF states "*Development should only be prevented or refused on highways grounds if there would be an unacceptable impact on highway safety, or the residual cumulative impacts on the road network would be severe*".

Paragraph 112 of the NPPF states that applications for development should:

- *"Give priority first to pedestrian and cycle movements, both within the scheme and with neighbouring areas; and second to facilitating access to high quality public transport, with layouts that maximise the catchment area for bus or other public transport services, and appropriate facilities that encourage public transport use;*
- *Address the needs of people with disabilities and reduced mobility in relation to all modes of transport;*
- *Create places that are safe, secure, and attractive – which minimise the scope for conflicts between pedestrians, cyclists and vehicles, avoid unnecessary street clutter and respond to local character and design standards;*
- *Allow for the efficient delivery of good, and access by service and emergency vehicles; and*
- *Be designed to enable charging of plug-in and other ultra-low emission vehicles in safe, accessible and convenient locations."*

Furthermore, Paragraph 113 states that all developments that generate significant amounts of movement should be supported by a Transport Statement or Transport Assessment.

2.3 Local Policy

2.3.1 Rochdale Adopted Core Strategy (2016)

The Rochdale Core Strategy (RCS) was adopted in October 2016, which sets out the long-term spatial strategy for the future development of Rochdale Borough. The RCS seeks to deliver sustainable development and growth in accordance with the objectives set out within the NPPF, guiding regeneration in the borough through to 2028.

The RCS highlights the Kingsway Business Park area as an economic growth corridor given its proximity to the M62 J21 and residential areas, however the RCS also recognises that mixed-use developments are also required to support the developing industrial uses in the employment area.

As part of SO1 'Delivering a more prosperous economy' Policy E1 (Establishing thriving town, district and local centres) highlights that although the RCS aims to create central shopping hubs and regenerate town/local centres "small scale shops and services to meet local needs, outside of centres, including employment zones, will be supported where:

- They are in a location that is not, or will not be, reasonably served by an existing or proposed centre or shop;
- There are no suitable vacant shops nearby; and
- They will be accessible to local residents/workers on foot.

SO5 of the RCS aims to improve accessibility and enhance sustainable transport, in order to;

- Deliver transport improvements at a strategic, borough-wide and local level to support development proposals;
- Ensure that development is in the most appropriate and accessible locations;
- Minimise trips, especially single occupancy, and trip length;
- Promote sustainable travel as a viable transport option;
- Support measures that enhance safety and access for people with impaired mobility; and
- Reduce CO_2 emissions from traffic.

Where Policy T1 states new developments should aim to work with existing infrastructure to help promote 'smarter choices' and behavioural changes, to encourage less car and single occupancy travel, enhancing the sustainable travel options within the local area.

Policy T2 aims to improve accessibility within the borough by improving the availability and capacity of public transport, where enhanced transport links and access within the M62 corridor are planned to improve sustainable transport access and ease congestion.

Further improvements are planned within the vicinity of Kingsway Business Park, as outlined in the RCS, including improvements to the Metrolink, bus services, walking/cycling links, signing and public awareness, within and outside the borough.

As part of Policy T2 development and infrastructure proposals are required to satisfy the council's accessibility hierarchy where transport needs are to be considered in the following order;

- People with impaired mobility and pedestrians;
- Cyclists;
- Public transport users;
- Taxi/private hire vehicles;
- Powered two wheeled vehicles;
- Commercial traffic;
- Shoppers, visitors and tourists; and
- Long stay and peak time commuter traffic.

RBC require development proposals to be supported by a Transport Assessment if 60 or more person trips in any peak hour (between 07:00 and 10:00 and/or 16:00 and 19:00). The trip generating potential of the proposed development is assessed in chapter 6 of this report.

2.4 Consideration of the Application Site against Policy Background

In general, the relevant transport policies set out above follow similar themes and promote common aims. These are to provide sustainable development to encourage non-car modes of transport, to ensure that the highways impact of new developments is acceptable or mitigated against and to promote good site design with appropriate parking levels.

The above summary of relevant national and local transport policies sets out the context in which the application should be considered. The analysis set out in the subsequent sections of this report confirms that the proposed development is compliant with relevant transport planning policies and can specifically help contribute to their economic growth and access to services objectives whilst positively addressing the traffic impact of the development.

3 Existing Conditions

3.1 General

The development site comprises an area of undeveloped land to the south of Wallis Avenue, situated approximately 1.5km to the south-east of Rochdale Town Centre.

Wallis Avenue bounds the site to the north, with Michael Faraday Avenue along the site's eastern aspect, and the A6193 Sir Isaac Newton Way running along the site's southern boundary. The A664 Rochdale Bypass is situated to the west of the site beyond an existing pub/restaurant building and its associated car park.

The site is situated to the north-western portion of Kingsway Business Park. The surrounding area of the site is largely of mixed-use, with residential dwellings located to the north and south-west and industrial units to the east and south-east of the site.

Existing vehicular access and egress to the site is provided from Wallis Avenue via a crossover junction along the site's northern boundary.

3.2 Surrounding Highway Network

3.2.1 Wallis Avenue

Wallis Avenue is formed of a single carriageway which runs in a general east/west orientation, running along the site's northern boundary. The road provides access to the site, existing pub/restaurant building, and a residential development to the north of the site.

To the north-eastern corner of the development site, Wallis Avenue meets Michael Faraday Avenue at a two-way priority-controlled junction. The road extends west of the existing site access point to provide access to a pub/restaurant car park situated to the north-western corner of the site.

The road has an approximate carriageway width of 6m, is subject to a 30mph speed limit, and benefits from street lighting provision. Pedestrian footways run along both sides of the carriageway, with dropped kerbs and tactile paving provided at the minor junctions along Wallis Avenue including the existing access/egress point to the site.

3.2.2 Michael Faraday Avenue

Michael Faraday Avenue is formed of a single carriageway which runs in a general north-east/south-west orientation within the vicinity of the site. The road connects to the site from a roundabout junction with the A6193 Sir Isaac Newton Way to the south of the site.

Within the vicinity of the site, Michael Faraday Avenue has an approximate carriageway width of 6.5m and is subject to a 30mph speed-limit, supported by street-lighting provision and double yellow-line parking restrictions along its length.

Shared footway/cycleway provision is provided on the eastern side of the carriageway and a pedestrian footway runs along the western side of the carriageway. Both footways are supported by dropped kerb crossings with tactile paving located at various points along the road.

3.3 Baseline Traffic Data

A classified ATC survey was undertaken of the A6193 Sir Isaac Newton Way/ Michael Faraday Avenue roundabout and Michael Faraday Avenue/ Wallis Avenue/ warehouse access junction on Thursday 22nd June 2023 between the hours of 07:00-10:00 and 16:00-19:00. Analysis of the survey identified the Thursday AM and PM peak-hours as 07:30-08:30 and 16:30-17:30 on the Sir Isaac Newton Way roundabout, and 07:45-08:45 and 17:30-18:30 on the Michael Faraday Avenue/ Wallis Avenue junction, respectively. The full traffic survey data is enclosed at **Appendix 1**.

The total junction inflow at the Sir Isaac Newton Way/ Michael Faraday Avenue roundabout was recorded from the survey data as 1,325 PCUs during the identified AM peak-hour and 1,590 PCUs during the PM peak-hour.

The total junction inflow at the Michael Faraday Avenue/ Wallis Avenue/ warehouse access junction was recorded from the survey data as 269 PCUs during the identified AM peak-hour and 487 PCUs during the PM peak-hour.

3.4 Road Safety

Accident statistics have been obtained for the local highway network in the vicinity of the application site for the five years data covering 2017 to 2021 from the Department for Transport (DfT).

Within the assessment period, no incidents were recorded within the vicinity of the site access junction, along Wallis Avenue or Michael Faraday Avenue.

One incident of ‘slight’ severity was recorded in 2017, along the western arm of the Michael Faraday Avenue/A6193 Sir Isaac Newton Way roundabout, involving two cars.

No incidents involved pedestrians, pedal cyclists or motorcycle users.

On review of the data and given the nature of the local highway network and associated traffic volumes, it is considered that the existing accident record does not demonstrate any pre-existing patterns or trends of incidents that could be affected by the development proposals.

4 Proposed Development

4.1 General

The development proposals comprise the construction of an eight-bay PFS, with an associated retail store of around 500m^2 GFA (Gross Floor Area), a drive-thru coffee shop of approximately 185m^2 GFA and a drive-thru restaurant of around 250m^2 GFA, on a parcel of land, north of Sir Isaac Newton Way.

All elements of the site will be supported by dedicated car parking facilities for customers, inclusive of Electric Vehicle (EV) charging bays and mobility impaired standard bays throughout the site. An overflow/staff parking area will also be provided on the site.

As part of the proposals the PFS, associated retail store and EV bays will be to the east of the site, and the drive-thru units located within the western portion of the site.

Four jet washing bays and a rollover car wash will also be provided to the west of the PFS forecourt.

The proposed layout of the site can be found at **Appendix 2** of this report.

4.2 Proposed Site Access and Internal Arrangements

The existing vehicular access and egress arrangements of the site will be retained with minor amendments to serve the proposed development, with access and egress provided via a priority-controlled junction off Wallis Avenue.

An internal access road will facilitate access to all elements of the site, where access and egress of the drive-thru units will be taken via a new two-way priority-controlled junction off the northbound lane of the internal access road.

The PFS element of the site will operate an anticlockwise one-way system, with access taken to the south of the site and all vehicles returning to the internal access road via a priority-controlled egress junction.

Internal shared use cycle/pedestrian footways and zebra-style crossing facilities will be constructed to allow pedestrian access to all uses located at the site, as well as access from the existing footway provision along Wallis Avenue. Additional pedestrian/cyclist access to the site will be provided via new connections to the existing footways along Michael Faraday Avenue and Sir Isaac Newton Way to the east and south of the site, respectively.

To allow safe and easy access to all users of the site, level access (i.e., no steps up and into any of the buildings) will be ensured. All parking bays for mobility impaired users will be situated close to the main entrances of all uses on site.

A swept-path analysis has been undertaken of the site access and internal arrangements for an oil tanker for use of the offset fills. A swept-path analysis for a 10m rigid vehicle has also been undertaken as the largest servicing vehicle associated with the retail store and drive-thru units, together with a large car along the drive-thru lanes, as shown in **Appendix 3**.

4.3 Parking Provision

As part of the development proposals, a total of 80 car parking spaces will be provided across the wider site, inclusive of eight bays to a mobility impaired standard.

A total of 14 standard parking spaces will be serve the PFS unit, inclusive of two mobility impaired standard bays. An EV charging hub comprising 12 bays, inclusive of two bays to a mobility impaired standard will be situated to the south of the PFS forecourt.

Within the western portion of the site, 44 parking bays will be provided to serve the drive-thru coffee shop and drive-thru restaurant, with two mobility impaired standard bays situated along the frontage of both the units.

The remaining 10 car parking bays will be located to the centre of the site, accessible off the main internal access road for overflow/staff parking.

A parking assessment has been undertaken with regard to RBC local parking standards as presented within the Rochdale Borough Council 'Rochdale Adopted Core Strategy' document.

The document suggests the maximum parking provisions for various land-uses, where PFS are not listed, therefore the most appropriate land-use class of 'A1 Food Retail' has been used to determine the required level of parking for the proposals. For food retail units under 900m^2 GFA, one space per 25m^2 is recommended, for the proposed development this equates to a maximum of 20 standard spaces.

The standards suggest one standard space per 8.5m² for the proposed drive-thru restaurant, equating to 30 standard spaces at the development. There are no standards provided for drive-thru coffee shops, therefore, the most appropriate land-use category, 'Cafés/Snack Bars' has been applied to the proposed coffee shop, where one standard space per 6m² is suggested. Applied to the proposed drive-thru coffee shop, the standards equate to a maximum of 31 standard spaces.

Two jet washing bays and two servicing air/water/vacuum bays will be situated to the west of the PFS forecourt.

Overall, RBC parking standards suggest a maximum of 81 standard spaces at the development site, therefore, the mixed-use development aligns with local guidance as a total of 80 spaces are proposed, inclusive of 12 EV bays and eight mobility impaired standard bays.

Cycle parking will be provided across the site in the form of ‘Sheffield’ cycling stands. Located across the site for user convenience, four stands will be situated to the south-east of the PFS retail unit, and two stands at both the coffee-shop and restaurant units, with a total of 16 pedal cycle spaces across the development site.

5 Access by Non-Car Modes

5.1 General

As required by planning policy, a review of access by all modes of travel has been undertaken. The options for accessing the site by sustainable modes are discussed in more detail below.

5.2 Pedestrian Access

Relevant guidance provided in Manual for Streets (MfS) states that walking offers the greatest potential to replace short car trips, particularly those under 2km.

A walk accessibility plan is provided at **Figure 5.1**, highlighting the accessible walking area within a 2km catchment of the site, equivalent to around a 25-minute walk.

Figure 5.1 – Walk Accessibility Plan

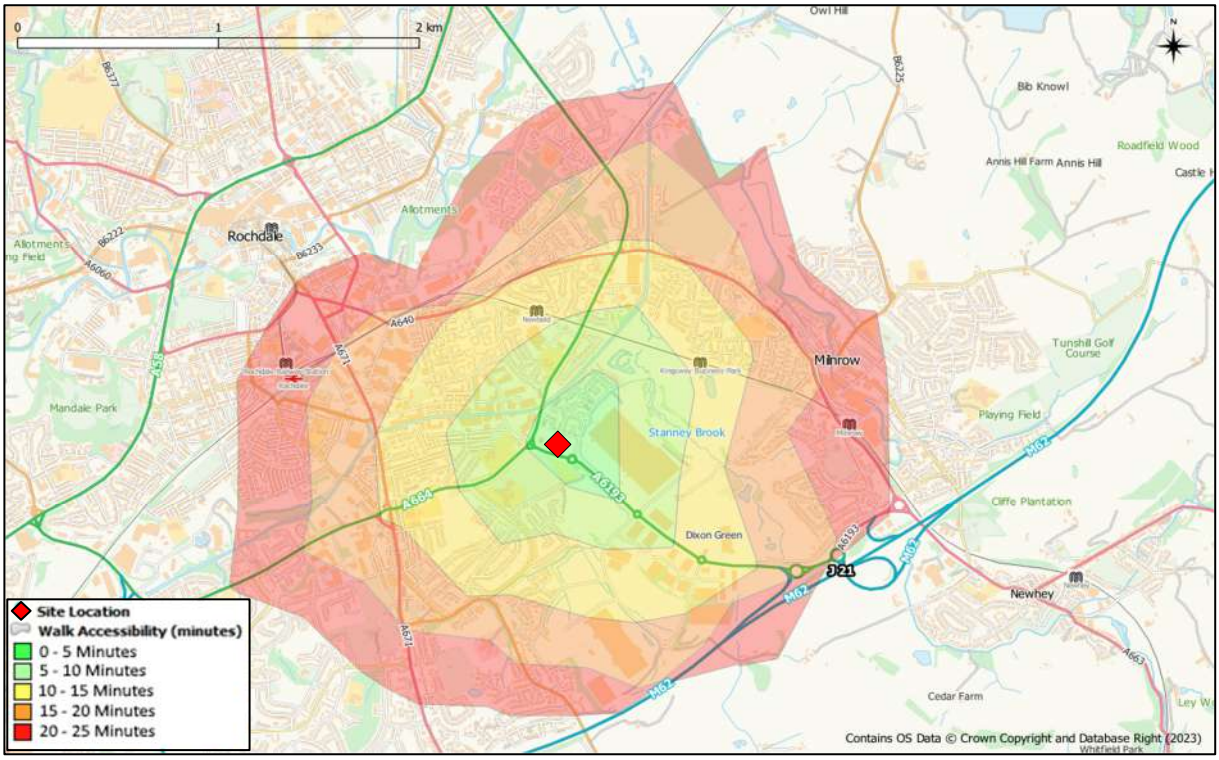

The plan indicates that a number of local residential developments are accessible within a 10-minute walking journey of the site. Several Metrolink tram stops along the Oldham and Rochdale Line can also be accessed within a 25-minute walking journey of the site. To the south-east of the site, the wider Kingsway Business Park can be accessed within a 25-minute walking journey.

Pedestrian access into the site is supported by the existing infrastructure associated with Wallis Avenue and the surrounding local highway network within the vicinity of the site.

5.3 Cycle Access

It is widely recognised that cycling has the potential to substitute shorter car journeys for work and leisure purposes for journeys of up to around 8km. **Figure 5.2** illustrates the areas reachable within a 25-minute cycling journey of the site.

Figure 5.2 – Cycle Accessibility Plan

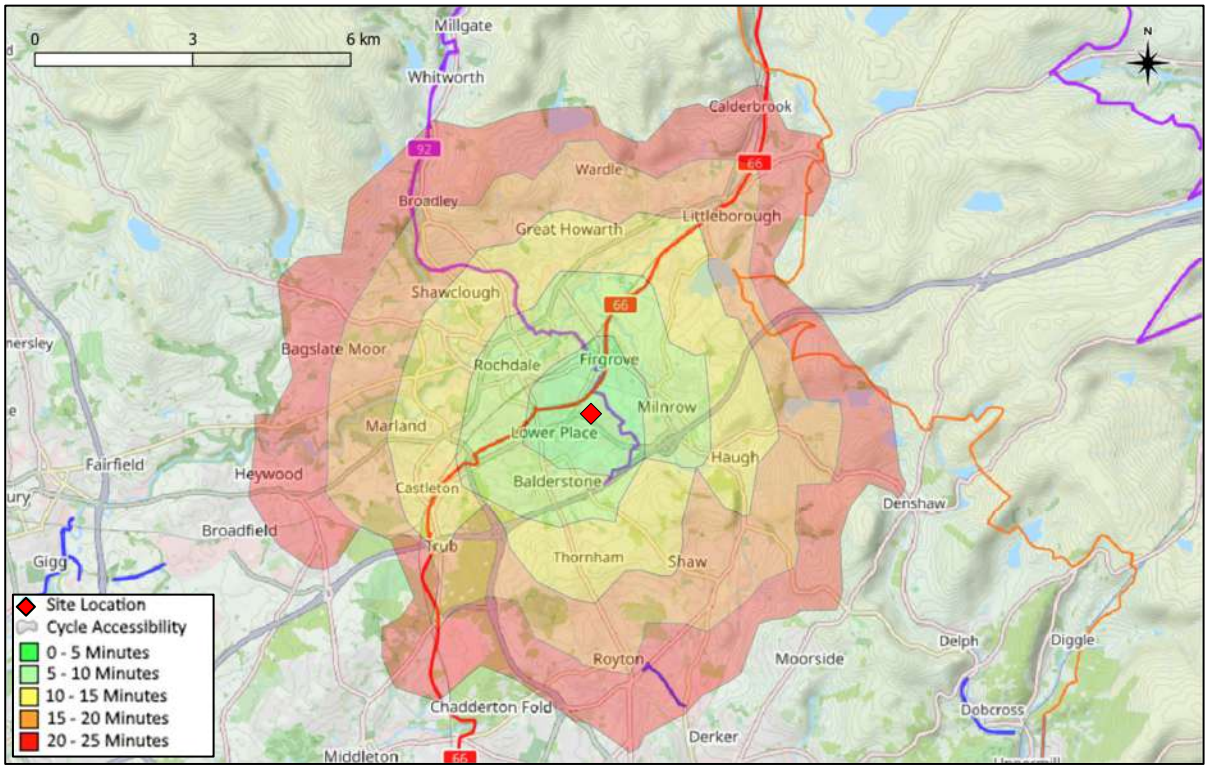

Source: OpenStreetMap (2023)

The plan indicates that Rochdale Town Centre and the residential areas of Lower Place, Balderstone and Milnrow are accessible within a 10-minute cycle journey of the site. A number of railway stations and Metrolink tram stops can also be accessed within a 10-minute cycle journey, including Rochdale Railway Station and Rochdale Town Centre tram stop.

National Cycle Network (NCN) Route 66 is situated to the north-west of the proposed site, accessible within a 5-minute cycling journey. Within the vicinity of the site, NCN Route 66 runs in an overall south-west/north-east orientation, offering mixed traffic-free and on-road cycling provision, that connects Manchester City Centre to Spurn Head.

NCN Regional Route 92 known as 'The Valley of Stone Greenway' also runs in close proximity to the site accessible within a five-minute journey of the site. Route 92 runs through Kingsway Business Park, routing northwards to Cloughfold, situated north-west of the site.

Off-road cycle lanes are also provided along the Wallis Avenue and Michael Faraday Avenue carriageways to the north and east of the site, linking with the local surrounding infrastructure within the site's vicinity.

5.4 Public Transport Access

5.4.1 Bus

The nearest available bus stop is situated along the Rochdale Bypass, approximately 250m south-west of the site access, equivalent to a three-minute walking journey.

A summary of the local bus services is provided in **Table 5.1**:

Table 5.1 – Bus Service Summary

Service	Route Description	Core Weekday Frequency
R7	Rochdale – Middleton via Kirkholt	Hourly
R4	Rochdale – via Milnrow and Kingsway	Hourly
R6	Rochdale – Newhey	Hourly

Source: Traveline

As the table demonstrates, regular bus services are accessible from the site, providing access to destinations within Rochdale including Milnrow.

5.4.2 Train and Light Rail

Rochdale Railway Station is the nearest station to the development site, approximately 2km north-west of the site, equivalent to a 25-minute walking journey or an eight-minute cycling journey. The station sits on the Caldervale Rail Line, and the Oldham and Rochdale Metrolink. The multi-modal transport hub provides services operated by Northern and Metrolink.

Six trains per hour depart the station to Manchester Victoria, where two services are direct. Northern also provide three trains per hour to Leeds and an hourly service to Blackburn via Burnley Manchester Road. Eastbound, a half hourly service operates to Bradford Interchange.

The nearest Metrolink tram stop to the site is Kingsway Business Park, approximately 1km north-east of the site, equivalent to an 11-minute walk, or a three-minute cycling journey. Accessible via a dedicated footpath/cycleway north-east of the proposals off Michael Faraday Avenue. The tram stop provides access to Manchester City Centre and Rochdale Town Centre, where services on all routes run approximately every 12-mintues.

5.5 Accessibility Summary

Overall, it can be summarised that the site offers good potential for some journeys, particularly those by staff, to be undertaken by modes other than car.

6 Development Trip Generation

6.1 General

This chapter provides an estimation of the likely levels of trip generation resulting from the proposed mixed-use development on the adjacent highway network.

6.2 Trip Generation

6.2.1 Trip Generation – Petrol Filling Station

The TRICS database has been used to derive the estimated numbers of trips for each element of the proposed mixed-use site for the weekday AM and PM peak-hour periods.

The selection criteria for the comparative sites used for the Petrol Filling Station is as follows:

- Land use – 'Petrol Filling Stations', sub-categories – 'PFS with Retail';
- All London and Ireland sites excluded;
- Weekday surveys selected; and
- Selection by GFA.

A summary of the peak-hour trip rates (per filling bay) for the proposed PFS is shown in **Table 6.1**, with the TRICS output report provided at **Appendix 4**.

Table 6.1: Trip Rates – Petrol Filling Station (per filling bay)

	Weekday AM Peak Hour (08:00 – 09:00)		Weekday PM Peak Hour (17:00 – 18:00)	
	Arrivals	**Departures**	**Arrivals**	**Departures**
Vehicles	7.6	7.438	8.325	8.325

The trip rates have been applied to the proposed development of eight-filling bays GFA in **Table 6.2**.

Table 6.2: Trip Generation – Petrol Filling Station (Eight-filling bays)

	Weekday AM Peak Hour (08:00 – 09:00)		Weekday PM Peak Hour (17:00 – 18:00)	
	Arrivals	**Departures**	**Arrivals**	**Departures**
Vehicles	61	60	67	67

6.2.2 Trip Generation – Proposed Drive-Thru Units

Further trip generation assessments have been undertaken using the TRICS database for the proposed drive-thru restaurant. The selection criteria for the comparative sites used for the drive-thru units is as follows:

- Land use – 'Hotel, Food & Drink', sub-category – 'Fast Food Drive-Thru';
- All London and Ireland sites excluded;
- Weekday surveys selected; and
- Selection by GFA.

The TRICS output report is provided at **Appendix 4**.

Table 6.3: Trip Rates – Fast Food Drive-Thru (per 100m²)

	Weekday AM Peak Hour (08:00 – 09:00)		Weekday PM Peak Hour (17:00 – 18:00)	
	Arrivals	**Departures**	**Arrivals**	**Departures**
Vehicles	9.574	9.663	11.907	12.260

The trip rates have been applied to the proposed development of approximately 250m² GFA in **Tables 6.4**.

Table 6.4: Trip Generation – Fast Food Drive-Thru (per 250m²)

	Weekday AM Peak Hour (08:00 – 09:00)		Weekday PM Peak Hour (17:00 – 18:00)	
	Arrivals	**Departures**	**Arrivals**	**Departures**
Vehicles	24	24	30	31

The TRICS database has also been used to assess the trip generating potential for the proposed drive-thru coffee shop. The selection criteria for the comparative sites used for the drive-thru unit is as follows:

- Land use – 'Hotel, Food & Drink', sub-category – 'drive-thru coffee shop;
- All London and Ireland sites excluded;
- Weekday surveys selected; and
- Selection by GFA.

The TRICS output report is provided at **Appendix 4.**

Table 6.5: Trip Rates – Drive-Thru Coffee Shop (per 100m²)

	Weekday AM Peak Hour (08:00 – 09:00)		Weekday PM Peak Hour (17:00 – 18:00)	
	Arrivals	**Departures**	**Arrivals**	**Departures**
Vehicles	20.966	19.324	21.546	19.324

The trip rates have been applied to the proposed development of approximately 185m² GFA in **Table 6.6**.

Table 6.6: Trip Generation – Drive-Thru Coffee Shop (per 185m²)

	Weekday AM Peak Hour (08:00 – 09:00)		Weekday PM Peak Hour (17:00 – 18:00)	
	Arrivals	**Departures**	**Arrivals**	**Departures**
Vehicles	39	36	19	23

6.2.3 Combined Trip Generation

The combined trip generation for the proposed mixed-use development is presented below in **Table 6.7**.

Table 6.7: Combined Trip Generation

	Weekday AM Peak Hour (08:00 – 09:00)		Weekday PM Peak Hour (17:00 – 18:00)	
	Arrivals	**Departures**	**Arrivals**	**Departures**
Vehicles	124	120	116	121

The above trip generation assessment shows that in the typical weekday highway AM peak hour (08:00 – 09:00) the proposals would result in a total of 244 two-way trips, with 237 trips in the PM peak hour (17:00 – 18:00).

The trip generation estimates presented in this section relate to all vehicles visiting the site. However, a key element of this type of development is that the vehicle movements attracted would almost exclusively relate to trips already on the local highway network, as discussed in more detail in the following section.

6.3 Trip Generation – Previous Approval

The previously approved outline proposals for the site from 2014 presented that trip generation was for a total of 4,584 two-way vehicle movements in the AM peak-hour period and for 4,593 two-way vehicle movements in the PM peak-hour period.

The 2022 TS used data collected in December 2019 to establish that there were 558 and 1,266 two-way vehicular movements at the site in the AM and PM peak-hour periods, respectively. Adding on the associated trip generation from the employment units in these proposals, the TS concluded there would remain a headroom of 3,739 and 3,071 two-way vehicular trips from the 2014 approval.

Data collected in June 2023 highlights that there is an increase in two-way vehicular trips on site in the AM peak-hour period of 461 (1,019 total) and a decrease in the PM peak-hour period of 92 (1,174 total) from the December 2019 survey.

The proposals of a PFS unit, associated retail store and two drive-thru units on the site would results in a total of 49 and 47 new two-way vehicular trips on the local highway network in the AM and PM peak-hour periods, respectively. Adding this trip generation to the new survey data still results in a remaining headroom from the trip generation from the 2014 approval.

Data also collected in June 2023 over the weekend periods demonstrate that two-way vehicle trips for Saturday are 256 and 350 in the AM and PM periods respectively, a total of 2,587 two-way trips fewer in the peak hour periods than the weekday. Therefore, only weekday scenarios have been taking forward in capacity assessments.

6.4 Trip Types & Trip Distribution

It should be noted that given the nature and location of the PFS proposed at the site, there would be minimal numbers of new or additional trips added to the highway network with traffic drawn from vehicles already passing at or near to the site.

Similarly, the drive-thru units would not be anticipated to generate a significant number of 'new' trips. In absence of any guidance, data has been gathered from other similar mixed-use developments which contain drive-thru elements.

Table 6.8: Roadside Service Trip Data

Trip Types for Petrol Station and Drive Thru Developments from Similar Approved Planning Applications							
Site	**Route Adj.**	**Planning Application Ref.**	**Linked**	**New**	**Pass-by**	**Divert**	**Total**
Land at A14/A5199, Cold Ashby, Northamptonshire*	A14/A5199	DA/2017/0498	10%	0%	9%	81%	100%
Denby Dale Road, Calder Park, Wakefield*	A636/M1	12/00892/FUL	10%	18%	18%	54%	100%
Dunnings Bridge Road, Sefton, Liverpool	A5036	DC/2016/02454	5%	5%	90%	0%	100%
Flagstaff Island, Ashby-de-la-Zouch, Leicestershire*	A42	16/00216/FULM	10%	18%	0%	72%	100%
Rotary Way, Hexham, Northumbria* (HE Consultant Assessment)	A69	15/01070/FUL	0%	0%	50%	50%	100%
Thieves Lane, Shrewsbury, Shropshire*	A5	17/06157/FUL	10%	23%	23%	45%	100%
Land off A5, Watling Street, Cannock*	A5	CH/17/425	10%	18%	72%	0%	100%
Land South of Wakefield Road, Gildersome, Leeds	A650	16/06477/PU	10%	20%	30%	40%	100%
Land off Dunball Roundabout, Bridgwater, Somerset*	A38/A39	42/18/00014	10%	18%	18%	54%	100%
Land North of Sproughton Road, Ipswich, Suffolk*	A14	DC/18/03167	10%	18%	18%	54%	100%
Land Adj. to M49, Avonmouth, South Gloucestershire	M49	PK18/6112/F	8%	13%	36%	43%	100%
A137/A14 J56, Wherstead, Ipswich, Suffolk*	A137/A14	DC/19/02798	10%	18%	18%	54%	100%
Stretton Point, Hinckley, Leicestershire#	A5	20/00531/HYB	9%	14%	33%	45%	100%
		Average	**9%**	**14%**	**32%**	**46%**	**100%**

* = Linked trips deduction made prior to calculation

In order to undertake a robust assessment, it has been assumed that 20% of the mixed-use development vehicular trips would be classed as 'new' with 10% 'linked' or 'internal trips' between the PFS/retail store and the drive-thru units.

As the proposed development site is located within close proximity to both the A6193 Sir Isaac Newton Way and A664 Rochdale Bypass it is considered reasonable to assume that a significant portion of trips would by 'diverted' trips drawn from movements along the A6193 and A664. Where 'diverted' trips are further separated into the following categories:

- 'Local diverted' (20%) – trips diverted from the Wallis Avenue/Michael Faraday Way Junction
- 'Wider diverted' (50%) – trips diverted from the Sir Isaac Newton Way Roundabout Junction

The quantum of trips, by trip type has been assessed in **Table 6.9**.

Table 6.9 – Estimated Trip Generation by Trip Type

Trip Type	Weekday AM Peak Hour (0800-0900)		Weekday PM Peak Hour (1700-1800)	
	Arrivals	Departures	Arrivals	Departures
New (20%)	25	24	23	24
Internal Linked (10%)	12	12	12	12
Wider Diverted (50%)	62	60	58	61
Local Diverted (20%)	25	24	23	24

The above table shows that the proposed mixed-use development is likely to generate around 49 and 47 'new' trips during the AM, PM peak-hour assessment periods, respectively.

Due to the anticipated level of new vehicle trips, it is considered that the proposed development would not have a severe impact on the surrounding local highway network. Nevertheless, the proposals have been taken forward for operational assessment as detailed in **Chapter 7**.

7 Anticipated Highway Impacts

This chapter describes the impact of the trips generated by the proposed development on the operation of the A6193 Sir Isaac Newton Way/ Michael Faraday Avenue roundabout and Michael Faraday Avenue/ Wallis Avenue/ warehouse access junction.

7.1 Baseline Traffic Data

A classified ATC survey was undertaken of the A6193 Sir Isaac Newton Way/ Michael Faraday Avenue roundabout and Michael Faraday Avenue/ Wallis Avenue/ warehouse access junction on Thursday 22nd June 2023 between the hours of 07:00-10:00 and 16:00-19:00.

The assessed junctions were observed to operate under separate peak-hour-periods, which were identified as follows, with the associated traffic figures presented in **Appendix 5**:

Sir Isaac Newton Way Roundabout:

- Thursday AM: 07:30 – 08:30hrs; and
- Thursday PM: 16:30 – 17:30hrs.

Michael Faraday Avenue/ Wallis Avenue/ Warehouse Access Junction:

- Thursday AM: 07:45 – 08:45hrs; and
- Thursday PM: 18:30 – 17:30hrs.

The full survey data is provided at **Appendix 1**.

It should also be noted that the traffic survey peak-hour periods do not fully align with the TRICS peak-hour assessment periods taken forward and so a robust assessment has been provided.

7.2 Assessment Scenarios

Capacity assessments have been undertaken for the following scenarios to ensure that the local junctions in can operate with the proposed development in place at opening, and in the future:

- 2024 (opening year) base;
- 2024 (opening year) base + development;
- 2028 (5 years post-application) base; and
- 2028 (5 years post-application) base + development.

Daytime visitor trip distributions have been determined from a 20-minute drive-time gravity model assessment based on an analysis of 2011 Usual Resident Population Dataset at MSOA level based on 2011 census data. The dataset provides the home location of resident populations which have been used to identify the distribution of traffic within a 20-minute drive-time assessment area, based on the most convenient route to/from the development.

To account for background traffic growth, the observed traffic flows have been factored using the DfT's TEMPRO 7.2b computer programme. Growth rates for 'car drivers only' were selected with the trip end type being defined as 'origin/destination', for the Middle Layer Super Output Area (MSOA) area Rochdale 013.

Trip rates were obtained for the weekday AM and PM peaks, once the trip rates were calculated, an adjustment was applied to provide a local growth rate. A growth calculation for 'All' roads was weighted to each TEMPRO growth rate.

The growth factors are summarised in **Table 7.2**:

Table 7.2 – TEMPRO Growth Factors

	TEMPRO Growth Factors	
	AM	**PM**
2023 – 2024	1.0072	1.007
2023 – 2028	1.0373	1.0365

7.3 Assessment Methodology

The JUNCTIONS 9 ARCADY and PICADY programmes are used to assess the capacity and delay of roundabout and priority junctions, respectively. The software program uses geometric parameters along with traffic flows for the junction to assess its performance. The outputs of the modelling program are the Ratio of the Flow to Capacity (RFC) and predicted queue lengths (in Passenger Car Units (PCUs) for individual approaches.

An RFC value between 0 and 0.85 indicates that the junction is operating well within capacity. An RFC value between 0.85 and 1.0 means that the junction is still operating within capacity, but localised delays and queues may occur. An RFC value over 1.0 signifies that the junction will be operating above its predicted capacity. The following provides a summary of the operational analysis results in support of this assessment.

Stand-alone junction assessments of the Sir Isaac Newton Way/ Michael Faraday Avenue roundabout and Michael Faraday Avenue/ Wallis Avenue/ warehouse access junction have been undertaken to understand the impact of the development proposals on the roundabouts when operating in isolation.

A full copy of the model outputs is contained within **Appendix 6**.

7.4 Sir Isaac Newton Way/Michael Faraday Avenue Roundabout

An ARCADY model has been set up for the Sir Isaac Newton Way/ Michael Faraday Avenue roundabout. The results for the 2024 opening year scenario are summarised in **Table 7.3**:

Table 7.3 – Sir Isaac Newton Way/ Michael Faraday Avenue Roundabout Base Capacity Assessment, 2024

Approach	2024 Base				2024 Base + Development			
	AM Peak		PM Peak		AM Peak		PM Peak	
	RFC	MMQ	RFC	MMQ	RFC	MMQ	RFC	MMQ
Michael Faraday Ave.	0.09	0.1	0.06	0.1	0.15	0.2	0.12	0.2
Sir Isaac Newton Way E	0.35	0.6	0.46	0.9	0.36	0.6	0.48	1.0
Sir Isaac Newton Way W	0.24	0.4	0.29	0.4	0.25	0.4	0.29	0.5

The modelling results show that in the 2024 opening year scenario, the roundabout would operate with significant levels of spare capacity with the addition of development-related traffic, with a maximum RFC of 0.48 on the A6193 Sir Isaac Newton Way (eastbound) during the PM peak-hour period, therefore indicating the negligible impact of the development.

The results for the 2028 future year scenario are summarised in **Table 7.4**:

Table 7.4 – Sir Isaac Newton Way/ Michael Faraday Avenue Roundabout Base Capacity Assessment, 2028

Approach	2028 Base				2028 Base + Development			
	AM Peak		PM Peak		AM Peak		PM Peak	
	RFC	MMQ	RFC	MMQ	RFC	MMQ	RFC	MMQ
Michael Faraday Ave.	0.09	0.1	0.12	0.1	0.15	0.2	0.12	0.2
Sir Isaac Newton Way E	0.36	0.6	0.48	1.0	0.37	0.6	0.49	1.1
Sir Isaac Newton Way W	0.25	0.4	0.29	0.5	0.26	0.4	0.30	0.5

The above table shows that the roundabout will continue to operate with significant spare capacity with the application of development-related traffic, indicating a maximum RFC of 0.49 at the A6193 Sir Isaac Newton Way (eastbound) approach during the PM peak-hour period.

7.5 Michael Faraday Avenue/ Wallis Avenue/Warehouse Access Junction

A PICADY model has been set up for the Michael Faraday Avenue/ Wallis Avenue/ warehouse access junction. It has been noted that the staff car park associated with the warehouse unit adjacent to the site operates a clockwise one-way system with access taken off Michael Faraday Avenue. The warehouse also runs a 12-hour shift pattern (06:00 – 18:00 and 18:00 – 06:00) accounting for the difference in traffic heading north along Michael Faraday Avenue in the PM peak hour vs the AM peak hour.

A delivery yard and access road are located to the south of the warehouse unit, which operates an anti-clockwise one-way system, egressing onto Michael Faraday Avenue to form the crossroad junction with Wallis Avenue.

The results for the 2024 opening and future year scenarios are summarised in **Table 7.5**:

Table 7.5 – Michael Faraday Avenue/ Wallis Avenue/ Warehouse Access Junction Base Capacity Assessment

Approach	2024 Base				2024 Base + Development			
	AM Peak		PM Peak		AM Peak		PM Peak	
	RFC	MMQ	RFC	MMQ	RFC	MMQ	RFC	MMQ
Michael Faraday Ave. N	0.00	0	0.00	0	0.02	0	0.01	0
Warehouse Access	0.02	0	0.00	0	0.02	0	0.00	0
Michael Faraday Ave. S	0.00	0	0.00	0	0.00	0	0.00	0
Wallis Avenue	0.06	1	0.07	1	0.27	1	0.30	1

The results of the modelling show that the junction will operate with significant spare capacity in both of the assessment scenarios, with a maximum RFC of 0.30 and associated queue of one vehicle on the Wallis Avenue approach during the PM peak-hour period.

The results for the 2028 opening and future year scenarios are summarised in **Table 7.6**:

Table 7.6 – Michael Faraday Avenue/ Wallis Avenue/ Warehouse Access Junction Base Capacity Assessment

Approach	2028 Base				2028 Base + Development			
	AM Peak		PM Peak		AM Peak		PM Peak	
	RFC	MMQ	RFC	MMQ	RFC	MMQ	RFC	MMQ
Michael Faraday Ave. N	0.00	0	0.00	0	0.02	0	0.01	0
Warehouse Access	0.02	0	0.00	0	0.02	0	0.00	0
Michael Faraday Ave. S	0.00	0	0.00	0	0.00	0	0.00	0
Wallis Avenue	0.06	1	0.07	1	0.27	1	0.30	1

The results of the modelling show that the junction will operate with significant spare capacity in both of the assessment scenarios, with a maximum RFC of 0.30 and associated queue of one vehicle on the Wallis Avenue approach during the PM peak-hour period.

Overall, the stand-alone junction model results suggest that traffic associated with the proposed development would not have a material impact on the operation of the local highway network.

8 Summary and Conclusions

Dynamic Transport Planning is instructed by EG Group to report on the anticipated highways and transportation considerations related with the proposed mixed-use development of a PFS, associated retail store, drive-thru coffee shop, drive-thru restaurant and associated parking provision on land off Sir Isaac Newton Way, Kingsway Business Park, Rochdale.

The existing vehicular access and egress arrangements of the site will be retained with minor improvements to serve the proposed development, via a priority-controlled junction off Wallis Avenue, where an internal access road will facilitate access to all elements of the site.

A swept-path assessment has been undertaken of the site access/egress and internal arrangements for the largest servicing vehicles associated with the development together with a large car along the drive-thru lanes.

The highway accident data has been reviewed for the most recently available five-year road safety record for the area surrounding the site. The data does not demonstrate any pre-existing patterns or trends of incidents that could be affected by the development proposals.

The accessibility of the site for non-car modes of travel has been assessed. It is considered that the site is located to allow good potential for some journeys by sustainable modes of travel.

Car parking provision is provided as part of the proposals to cater for both staff and customers and is shown to align with local parking standards. The proposals also include EV charging bays and cycle parking provision to further encourage use of sustainable modes of travel.

The trip generation assessment shows that the proposed PFS and drive-thru units generate an anticipated total of around 49 and 47 ‘new’ two-way trips during the AM, PM peak-hour assessment periods, respectively, with the vast majority being diverted trips from the A6193 Sir Isaac Newton Way and the A664 Rochdale Bypass.

Adding this trip generation to the new survey data still results in a remaining headroom from the trip generation from the 2014 approval.

Although it has been demonstrated that the proposed development is likely to generate a relatively low level of new trips, a stand-alone capacity assessment of the Sir Isaac Newton Way/ Michael Faraday Avenue roundabout and Michael Faraday Avenue/ Wallis Avenue/ warehouse access junction has been undertaken.

The assessments show that with the application of development-related traffic, the assessed junctions will continue to operate within capacity, with the proposals having a negligible impact on the operation of both junctions.

Overall, on the basis of the assessments undertaken herein, it is concluded that there are no outstanding reasons why the proposed development should not be granted planning permission on highways grounds.

Appendix 1
Traffic Survey Data

Job No	GBSth7157
Client	Jordan Bell - Dynamic Transport Planning
Site	Michael Faraday Avenue (North)
Location	Rochdale
Site No	1
Start Date	22-Jun-23
Description	Volume Summary
Direction	Combined

Hour Starting	Day of Week							W'Day Ave	7 Day Ave
	Mon	Tue	Wed	Thu	Fri	Sat	Sun		
	26-Jun	27-Jun	28-Jun	22-Jun	23-Jun	24-Jun	25-Jun		
AM Peak	283	265	287	307	291	278	266		
PM Peak	401	373	386	388	381	359	288	**3682**	**3536**
00:00	28	24	24	18	27	43	45	24	30
01:00	14	16	11	13	15	19	17	14	15
02:00	11	8	13	14	10	16	17	11	13
03:00	15	13	6	12	11	15	21	11	13
04:00	28	26	19	29	24	23	29	25	25
05:00	283	265	287	307	291	278	266	287	282
06:00	257	262	264	262	259	179	209	261	242
07:00	235	223	198	207	185	62	59	210	167
08:00	256	246	235	223	195	79	55	231	184
09:00	199	177	216	183	168	169	131	189	178
10:00	132	137	140	132	120	162	137	132	137
11:00	130	121	148	117	118	133	171	127	134
12:00	131	132	176	137	138	190	166	143	153
13:00	164	164	188	198	194	198	162	182	181
14:00	138	166	163	158	166	199	197	158	170
15:00	197	195	159	160	215	189	183	185	185
16:00	180	179	191	203	228	158	169	196	187
17:00	401	373	386	388	381	359	288	386	368
18:00	333	353	331	361	366	255	260	349	323
19:00	146	135	176	203	195	165	114	171	162
20:00	112	136	141	139	124	126	93	130	124
21:00	107	109	134	162	141	152	128	131	133
22:00	69	66	80	118	106	103	58	88	86
23:00	45	16	46	45	58	62	31	42	43
Total	3611	3542	3732	3789	3735	3334	3006	3682	3536

7-19	2496	2466	2531	2467	2474	2153	1978	2487	2366
6-22	3118	3108	3246	3233	3193	2775	2522	3180	3028
6-24	3232	3190	3372	3396	3357	2940	2611	3309	3157
0-24	3611	3542	3732	3789	3735	3334	3006	3682	3536

Job No	GBSth7157
Client	Jordan Bell - Dynamic Transport Planning
Site	Michael Faraday Avenue (South)
Location	Rochdale
Site No	2
Start Date	22-Jun-23
Description	Volume Summary
Direction	Combined

Hour Starting	Day of Week							W'Day Ave	7 Day Ave
	Mon	Tue	Wed	Thu	Fri	Sat	Sun		
	26-Jun	27-Jun	28-Jun	22-Jun	23-Jun	24-Jun	25-Jun		
AM Peak	244	241	265	260	271	261	244		
PM Peak	288	308	305	331	283	273	261	**1662**	**1490**
00:00	22	11	16	14	6	11	7	14	12
01:00	2	4	7	8	7	6	5	6	6
02:00	8	5	12	11	6	6	7	8	8
03:00	12	8	5	6	7	4	8	8	7
04:00	10	10	9	7	9	2	9	9	8
05:00	74	82	91	108	80	70	74	87	83
06:00	244	241	265	260	271	261	244	256	255
07:00	47	45	40	45	46	16	23	45	37
08:00	42	44	44	60	41	15	16	46	37
09:00	60	61	49	49	40	30	25	52	45
10:00	51	67	52	59	38	21	14	53	43
11:00	58	60	67	48	49	14	13	56	44
12:00	73	51	72	69	50	19	29	63	52
13:00	59	58	64	73	89	48	38	69	61
14:00	115	131	117	127	102	77	81	118	107
15:00	82	82	90	53	69	23	22	75	60
16:00	116	106	99	112	95	19	12	106	80
17:00	158	173	149	110	112	53	64	140	117
18:00	288	308	305	331	283	273	261	303	293
19:00	24	29	28	33	25	20	20	28	26
20:00	17	19	17	19	16	7	18	18	16
21:00	29	18	185	26	22	21	19	56	46
22:00	31	30	41	36	26	31	43	33	34
23:00	21	7	10	10	18	9	13	13	13
Total	1643	1650	1834	1674	1507	1056	1065	1662	1490

7-19	1149	1186	1148	1136	1014	608	598	1127	977
6-22	1463	1493	1643	1474	1348	917	899	1484	1320
6-24	1515	1530	1694	1520	1392	957	955	1530	1366
0-24	1643	1650	1834	1674	1507	1056	1065	1662	1490

Job No	GBSth7157
Client	Jordan Bell - Dynamic Transport Planning
Site	James Kearns Avenue
Location	Rochdale
Site No	3
Start Date	30-Jun-23
Description	Volume Summary
Direction	Combined

MATRIX Traffic and Transport Data

Hour Starting	Day of Week							W'Day Ave	7 Day Ave
	Mon	Tue	Wed	Thu	Fri	Sat	Sun		
	03-Jul	04-Jul	05-Jul	06-Jul	30-Jun	01-Jul	02-Jul		
AM Peak	138	141	139	132	126	60	63		
PM Peak	148	216	168	165	167	73	57	**1823**	**1517**
00:00	17	6	6	11	31	13	19	14	15
01:00	10	2	7	10	5	5	6	7	6
02:00	7	8	10	12	15	7	4	10	9
03:00	12	4	6	6	7	3	1	7	6
04:00	18	12	20	15	17	16	10	16	15
05:00	138	141	135	132	126	60	63	134	114
06:00	82	97	95	106	80	42	37	92	77
07:00	120	131	139	116	122	24	19	126	96
08:00	91	102	111	90	92	17	15	97	74
09:00	87	91	117	106	80	39	18	96	77
10:00	119	132	102	87	99	34	28	108	86
11:00	85	61	74	93	72	20	37	77	63
12:00	128	141	126	146	99	43	37	128	103
13:00	144	216	168	165	131	73	57	165	136
14:00	148	153	155	142	167	53	51	153	124
15:00	77	82	87	85	105	37	36	87	73
16:00	110	117	119	114	70	35	30	106	85
17:00	128	128	126	105	91	49	49	116	97
18:00	99	76	65	58	59	33	35	71	61
19:00	50	60	32	48	33	42	27	45	42
20:00	32	49	33	32	32	26	44	36	35
21:00	68	72	66	73	57	42	41	67	60
22:00	43	48	57	55	50	52	46	51	50
23:00	11	11	13	17	20	14	11	14	14
Total	1824	1940	1869	1824	1660	779	721	1823	1517

7-19	1336	1430	1389	1307	1187	457	412	1330	1074
6-22	1568	1708	1615	1566	1389	609	561	1569	1288
6-24	1622	1767	1685	1638	1459	675	618	1634	1352
0-24	1824	1940	1869	1824	1660	779	721	1823	1517

Job No	GBSth7157
Client	Jordan Bell - Dynamic Transport Planning
Site	John Milne Avenue
Location	Rochdale
Site No	4
Start Date	22-Jun-23
Description	Volume Summary
Direction	Combined

MATRIX Traffic and Transport Data

Hour Starting	Day of Week							W'Day Ave	7 Day Ave
	Mon	Tue	Wed	Thu	Fri	Sat	Sun		
	26-Jun	27-Jun	28-Jun	22-Jun	23-Jun	24-Jun	25-Jun		
AM Peak	291	313	297	277	266	182	179		
PM Peak	276	280	259	256	238	112	137	**3611**	**3135**
00:00	34	38	57	41	43	23	35	43	39
01:00	42	32	43	51	49	40	40	43	42
02:00	78	93	97	102	109	89	64	96	90
03:00	75	43	58	70	70	46	43	63	58
04:00	59	67	55	54	68	62	38	61	58
05:00	98	120	113	116	100	79	82	109	101
06:00	122	126	146	106	115	77	81	123	110
07:00	255	240	238	213	232	60	46	236	183
08:00	207	241	214	223	200	71	48	217	172
09:00	173	193	208	184	164	123	88	184	162
10:00	258	313	251	266	266	182	160	271	242
11:00	291	292	297	277	266	176	179	285	254
12:00	216	213	207	189	202	91	96	205	173
13:00	239	245	251	221	238	88	137	239	203
14:00	253	234	213	171	168	83	76	208	171
15:00	182	155	201	163	177	71	92	176	149
16:00	239	223	242	218	194	56	74	223	178
17:00	276	280	259	256	202	86	133	255	213
18:00	133	159	143	121	110	112	107	133	126
19:00	159	144	171	159	150	93	103	157	140
20:00	93	107	109	107	97	73	110	103	99
21:00	83	78	102	101	79	56	52	89	79
22:00	62	54	47	68	72	58	53	61	59
23:00	47	28	27	39	28	23	37	34	33
Total	3674	3718	3749	3516	3399	1918	1974	3611	3135

7-19	2722	2788	2724	2502	2419	1199	1236	2631	2227
6-22	3179	3243	3252	2975	2860	1498	1582	3102	2656
6-24	3288	3325	3326	3082	2960	1579	1672	3196	2747
0-24	3674	3718	3749	3516	3399	1918	1974	3611	3135

Job No	GBSth7157
Client	Jordan Bell - Dynamic Transport Planning
Site	George Stephson Avenue
Location	Rochdale
Site No	5
Start Date	22-Jun-23
Description	Volume Summary
Direction	Combined

MATRIX Traffic and Transport Data

Hour Starting	Day of Week							W'Day Ave	7 Day Ave
	Mon	Tue	Wed	Thu	Fri	Sat	Sun		
	26-Jun	27-Jun	28-Jun	22-Jun	23-Jun	24-Jun	25-Jun		
AM Peak	70	50	69	53	56	23	5		
PM Peak	86	68	70	53	63	10	8	**632**	**477**
00:00	2	3	4	7	6	10	5	4	5
01:00	0	11	5	12	5	7	0	7	6
02:00	0	9	9	3	5	10	1	5	5
03:00	2	7	7	7	2	4	0	5	4
04:00	0	3	8	7	9	8	1	5	5
05:00	8	9	9	7	6	1	3	8	6
06:00	25	34	40	22	45	4	0	33	24
07:00	70	50	57	39	56	23	4	54	43
08:00	49	47	69	53	39	6	0	51	38
09:00	34	30	26	34	29	3	0	31	22
10:00	40	41	34	27	20	10	2	32	25
11:00	31	39	37	11	29	7	3	29	22
12:00	38	25	34	30	40	6	3	33	25
13:00	32	44	32	31	41	2	1	36	26
14:00	28	19	41	48	30	2	2	33	24
15:00	31	25	29	31	29	0	0	29	21
16:00	42	61	52	53	52	10	0	52	39
17:00	86	63	70	47	63	5	3	66	48
18:00	57	68	61	49	35	4	1	54	39
19:00	41	30	22	36	32	6	6	32	25
20:00	18	18	10	9	9	1	8	13	10
21:00	5	11	29	7	2	0	1	11	8
22:00	0	3	5	0	0	0	4	2	2
23:00	4	3	13	5	0	0	3	5	4
Total	643	653	703	575	584	129	51	632	477

7-19	538	512	542	453	463	78	19	502	372
6-22	627	605	643	527	551	89	34	591	439
6-24	631	611	661	532	551	89	41	597	445
0-24	643	653	703	575	584	129	51	632	477

Job No.	GB0h7157
Client	Dynamic Transport Planning
Suburb	Rochdale Manchester
Location	1. Michael Faraday Ave / Wallis Ave / Warehouse Access
Day/Date	Thu, 22nd June 2023
Weather	Fine
Description	Classified Intersection Count
	15 mins Data

	Class 1	Class 2	Class 3	Class 4	Class 5	Class 6
Classifications	MC	Cars	LGV	OGV1	OGV2	PSV

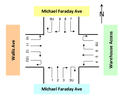

MATRIX Traffic and Transport Data

Michael Faraday Ave

Time Period	Direction 1 (Left Turn) MC	Cars	LGV	OGV1	OGV2	PSV	PCV	Total	Direction 2 (Through) MC	Cars	LGV	OGV1	OGV2	PSV	PCV	Total	Direction 3 (Right Turn) MC	Cars	LGV	OGV1	OGV2	PSV	PCV	Total	Direction 92 (U Turn) MC	Cars	LGV	OGV1	OGV2	PSV	PCV	Total
07:00 to 07:15	0	5	0	0	0	0	0	5	0	13	0	0	0	0	0	13	0	0	0	0	0	0	0	0	0	0	0	0	0	0	0	0
07:15 to 07:30	0	0	0	0	0	0	0	0	1	19	0	0	0	0	0	20	0	0	0	0	0	0	0	0	0	0	0	0	0	0	0	0
07:30 to 07:45	0	0	0	0	0	0	0	0	0	25	1	0	1	0	0	28	0	0	0	0	0	0	0	0	0	0	0	0	0	0	0	0
07:45 to 08:00	0	0	0	0	0	0	0	0	0	22	0	0	0	0	0	22	0	0	0	0	0	0	0	0	0	0	0	0	0	0	0	0
Hourly Total	**0**	**5**	**0**	**0**	**0**	**0**	**0**	**5**	**1**	**79**	**1**	**0**	**1**	**0**	**0**	**83**	**0**	**0**	**0**	**0**	**0**	**0**	**0**	**0**	**0**	**0**	**0**	**0**	**0**	**0**	**0**	**0**
08:00 to 08:15	0	0	0	0	0	0	0	0	0	17	0	0	0	0	0	17	0	0	0	0	0	0	0	0	0	0	0	0	0	0	0	0
08:15 to 08:30	0	1	0	0	0	0	0	1	0	19	2	0	2	0	0	24	0	0	0	0	0	0	0	0	0	0	0	0	0	0	0	0
08:30 to 08:45	0	1	0	0	0	0	0	1	0	19	1	0	0	0	0	20	0	0	0	0	0	0	0	0	0	0	0	0	0	0	0	0
08:45 to 09:00	0	0	0	0	0	0	0	0	0	15	0	0	0	0	0	15	0	0	0	0	0	0	0	0	0	0	0	0	0	0	0	0
Hourly Total	**0**	**1**	**0**	**0**	**0**	**0**	**0**	**1**	**0**	**67**	**3**	**0**	**2**	**0**	**0**	**72**	**0**	**0**	**0**	**0**	**0**	**0**	**0**	**0**	**0**	**0**	**0**	**0**	**0**	**0**	**0**	**0**
09:00 to 09:15	0	0	0	0	0	0	0	0	0	24	0	0	0	0	0	24	0	0	0	0	0	0	0	0	0	0	0	0	0	0	0	0
09:15 to 09:30	0	0	0	0	0	0	0	0	0	17	0	0	0	0	0	17	0	0	0	0	0	0	0	0	0	0	0	0	0	0	0	0
09:30 to 09:45	0	0	0	0	0	0	0	0	0	24	0	0	0	0	0	24	0	0	0	0	0	0	0	0	0	0	0	0	0	0	0	0
09:45 to 10:00	0	0	0	0	0	0	0	0	0	21	0	0	0	0	0	21	0	0	0	0	0	0	0	0	0	0	0	0	0	0	0	0
Hourly Total	**0**	**0**	**0**	**0**	**0**	**0**	**0**	**0**	**0**	**86**	**0**	**0**	**0**	**0**	**0**	**86**	**0**	**0**	**0**	**0**	**0**	**0**	**0**	**0**	**0**	**0**	**0**	**0**	**0**	**0**	**0**	**0**
AM Totals	**0**	**17**	**0**	**0**	**0**	**0**	**0**	**17**	**1**	**276**	**18**	**0**	**3**	**0**	**0**	**298**	**0**	**0**	**0**	**0**	**0**	**0**	**0**	**0**	**0**	**0**	**0**	**0**	**0**	**0**	**0**	**0**
10:00 to 10:15	0	0	0	0	0	0	0	0	0	19	0	0	0	0	0	19	0	0	0	0	0	0	0	0	0	0	0	0	0	0	0	0
10:15 to 10:30	0	0	0	0	0	0	0	0	0	17	0	0	0	0	0	17	0	0	0	0	0	0	0	0	0	0	0	0	0	0	0	0
10:30 to 10:45	0	0	0	0	0	0	0	0	0	18	0	0	0	0	0	18	0	0	0	0	0	0	0	0	0	0	0	0	0	0	0	0
10:45 to 11:00	0	0	0	0	0	0	0	0	0	17	0	0	0	0	0	17	0	0	0	0	0	0	0	0	0	0	0	0	0	0	0	0
Hourly Total	**0**	**0**	**0**	**0**	**0**	**0**	**0**	**0**	**0**	**70**	**0**	**0**	**0**	**0**	**0**	**70**	**0**	**0**	**0**	**0**	**0**	**0**	**0**	**0**	**0**	**0**	**0**	**0**	**0**	**0**	**0**	**0**
11:00 to 11:15	0	0	0	0	0	0	0	0	0	19	0	0	0	0	0	19	0	0	0	0	0	0	0	0	0	0	0	0	0	0	0	0
11:15 to 11:30	0	0	0	0	0	0	0	0	0	17	0	0	0	0	0	17	0	0	0	0	0	0	0	0	0	0	0	0	0	0	0	0
11:30 to 11:45	0	0	0	0	0	0	0	0	0	17	0	0	0	0	0	17	0	0	0	0	0	0	0	0	0	0	0	0	0	0	0	0
11:45 to 12:00	0	0	0	0	0	0	0	0	0	15	0	0	0	0	0	15	0	0	0	0	0	0	0	0	0	0	0	0	0	0	0	0
Hourly Total	**0**	**0**	**0**	**0**	**0**	**0**	**0**	**0**	**0**	**68**	**0**	**0**	**0**	**0**	**0**	**68**	**0**	**0**	**0**	**0**	**0**	**0**	**0**	**0**	**0**	**0**	**0**	**0**	**0**	**0**	**0**	**0**
12:00 to 12:15	0	0	0	0	0	0	0	0	0	19	0	0	0	0	0	19	0	0	0	0	0	0	0	0	0	0	0	0	0	0	0	0
12:15 to 12:30	0	0	0	0	0	0	0	0	0	17	0	0	0	0	0	17	0	0	0	0	0	0	0	0	0	0	0	0	0	0	0	0
12:30 to 12:45	0	0	0	0	0	0	0	0	0	17	0	0	0	0	0	17	0	0	0	0	0	0	0	0	0	0	0	0	0	0	0	0
12:45 to 13:00	0	0	0	0	0	0	0	0	0	15	0	0	0	0	0	15	0	0	0	0	0	0	0	0	0	0	0	0	0	0	0	0
Hourly Total	**0**	**0**	**0**	**0**	**0**	**0**	**0**	**0**	**0**	**68**	**0**	**0**	**0**	**0**	**0**	**68**	**0**	**0**	**0**	**0**	**0**	**0**	**0**	**0**	**0**	**0**	**0**	**0**	**0**	**0**	**0**	**0**
PM Totals	**0**	**0**	**0**	**0**	**0**	**0**	**0**	**0**	**0**	**204**	**0**	**0**	**0**	**0**	**0**	**204**	**0**	**0**	**0**	**0**	**0**	**0**	**0**	**0**	**0**	**0**	**0**	**0**	**0**	**0**	**0**	**0**

Warehouse Access

Time Period	Direction 4 (Left Turn) MC	Cars	LGV	OGV1	OGV2	PSV	PCV	Total	Direction 5 (Through) MC	Cars	LGV	OGV1	OGV2	PSV	PCV	Total	Direction 6 (Right Turn) MC	Cars	LGV	OGV1	OGV2	PSV	PCV	Total	Direction 62 (U Turn) MC	Cars	LGV	OGV1	OGV2	PSV	PCV	Total
07:00 to 07:15	0	0	0	0	0	0	0	0	0	0	0	0	0	0	0	0	0	0	0	0	0	0	0	0	0	0	0	0	0	0	0	0
07:15 to 07:30	0	0	0	0	0	0	0	0	0	0	0	0	0	0	0	0	0	0	0	0	0	0	0	0	0	0	0	0	0	0	0	0
07:30 to 07:45	0	0	0	0	0	0	0	0	0	0	0	0	0	0	0	0	0	0	0	0	0	0	0	0	0	0	0	0	0	0	0	0
07:45 to 08:00	0	0	0	0	0	0	0	0	0	0	0	0	0	0	0	0	0	0	0	0	0	0	0	0	0	0	0	0	0	0	0	0
Hourly Total	**0**	**0**	**0**	**0**	**0**	**0**	**0**	**0**	**0**	**0**	**0**	**0**	**0**	**0**	**0**	**0**	**0**	**0**	**0**	**0**	**0**	**0**	**0**	**0**	**0**	**0**	**0**	**0**	**0**	**0**	**0**	**0**
08:00 to 08:15	0	0	0	0	0	0	0	0	0	0	0	0	0	0	0	0	0	0	0	0	0	0	0	0	0	0	0	0	0	0	0	0
08:15 to 08:30	0	0	0	0	0	0	0	0	0	0	0	0	0	0	0	0	0	0	0	0	0	0	0	0	0	0	0	0	0	0	0	0
08:30 to 08:45	0	0	0	0	0	0	0	0	0	0	0	0	0	0	0	0	0	0	0	0	0	0	0	0	0	0	0	0	0	0	0	0
08:45 to 09:00	0	0	0	0	0	0	0	0	0	0	0	0	0	0	0	0	0	0	0	0	0	0	0	0	0	0	0	0	0	0	0	0
Hourly Total	**0**	**0**	**0**	**0**	**0**	**0**	**0**	**0**	**0**	**0**	**0**	**0**	**0**	**0**	**0**	**0**	**0**	**0**	**0**	**0**	**0**	**0**	**0**	**0**	**0**	**0**	**0**	**0**	**0**	**0**	**0**	**0**
09:00 to 09:15	0	0	0	0	0	0	0	0	0	0	0	0	0	0	0	0	0	0	0	0	0	0	0	0	0	0	0	0	0	0	0	0
09:15 to 09:30	0	0	0	0	0	0	0	0	0	0	0	0	0	0	0	0	0	0	0	0	0	0	0	0	0	0	0	0	0	0	0	0
09:30 to 09:45	0	0	0	0	0	0	0	0	0	0	0	0	0	0	0	0	0	0	0	0	0	0	0	0	0	0	0	0	0	0	0	0
09:45 to 10:00	0	0	0	0	0	0	0	0	0	0	0	0	0	0	0	0	0	0	0	0	0	0	0	0	0	0	0	0	0	0	0	0
Hourly Total	**0**	**0**	**0**	**0**	**0**	**0**	**0**	**0**	**0**	**0**	**0**	**0**	**0**	**0**	**0**	**0**	**0**	**0**	**0**	**0**	**0**	**0**	**0**	**0**	**0**	**0**	**0**	**0**	**0**	**0**	**0**	**0**
AM Totals	**0**	**0**	**0**	**0**	**0**	**0**	**0**	**0**	**0**	**0**	**0**	**0**	**0**	**0**	**0**	**0**	**0**	**0**	**0**	**0**	**0**	**0**	**0**	**0**	**0**	**0**	**0**	**0**	**0**	**0**	**0**	**0**
10:00 to 10:15	0	0	0	0	0	0	0	0	0	0	0	0	0	0	0	0	0	0	0	0	0	0	0	0	0	0	0	0	0	0	0	0
10:15 to 10:30	0	0	0	0	0	0	0	0	0	0	0	0	0	0	0	0	0	0	0	0	0	0	0	0	0	0	0	0	0	0	0	0
10:30 to 10:45	0	0	0	0	0	0	0	0	0	0	0	0	0	0	0	0	0	0	0	0	0	0	0	0	0	0	0	0	0	0	0	0
10:45 to 11:00	0	0	0	0	0	0	0	0	0	0	0	0	0	0	0	0	0	0	0	0	0	0	0	0	0	0	0	0	0	0	0	0
Hourly Total	**0**	**0**	**0**	**0**	**0**	**0**	**0**	**0**	**0**	**0**	**0**	**0**	**0**	**0**	**0**	**0**	**0**	**0**	**0**	**0**	**0**	**0**	**0**	**0**	**0**	**0**	**0**	**0**	**0**	**0**	**0**	**0**
11:00 to 11:15	0	0	0	0	0	0	0	0	0	0	0	0	0	0	0	0	0	0	0	0	0	0	0	0	0	0	0	0	0	0	0	0
11:15 to 11:30	0	0	0	0	0	0	0	0	0	0	0	0	0	0	0	0	0	0	0	0	0	0	0	0	0	0	0	0	0	0	0	0
11:30 to 11:45	0	0	0	0	0	0	0	0	0	0	0	0	0	0	0	0	0	0	0	0	0	0	0	0	0	0	0	0	0	0	0	0
11:45 to 12:00	0	0	0	0	0	0	0	0	0	0	0	0	0	0	0	0	0	0	0	0	0	0	0	0	0	0	0	0	0	0	0	0
Hourly Total	**0**	**0**	**0**	**0**	**0**	**0**	**0**	**0**	**0**	**0**	**0**	**0**	**0**	**0**	**0**	**0**	**0**	**0**	**0**	**0**	**0**	**0**	**0**	**0**	**0**	**0**	**0**	**0**	**0**	**0**	**0**	**0**
12:00 to 12:15	0	0	0	0	0	0	0	0	0	0	0	0	0	0	0	0	0	0	0	0	0	0	0	0	0	0	0	0	0	0	0	0
12:15 to 12:30	0	0	0	0	0	0	0	0	0	0	0	0	0	0	0	0	0	0	0	0	0	0	0	0	0	0	0	0	0	0	0	0
12:30 to 12:45	0	0	0	0	0	0	0	0	0	0	0	0	0	0	0	0	0	0	0	0	0	0	0	0	0	0	0	0	0	0	0	0
12:45 to 13:00	0	0	0	0	0	0	0	0	0	0	0	0	0	0	0	0	0	0	0	0	0	0	0	0	0	0	0	0	0	0	0	0
Hourly Total	**0**	**0**	**0**	**0**	**0**	**0**	**0**	**0**	**0**	**0**	**0**	**0**	**0**	**0**	**0**	**0**	**0**	**0**	**0**	**0**	**0**	**0**	**0**	**0**	**0**	**0**	**0**	**0**	**0**	**0**	**0**	**0**
PM Totals	**0**	**0**	**0**	**0**	**0**	**0**	**0**	**0**	**0**	**0**	**0**	**0**	**0**	**0**	**0**	**0**	**0**	**0**	**0**	**0**	**0**	**0**	**0**	**0**	**0**	**0**	**0**	**0**	**0**	**0**	**0**	**0**

Job No.	GB0h7157
Client	Dynamic Transport Planning
Suburb	Rochdale Manchester
Location	1. Michael Faraday Ave / Wallis Ave / Warehouse Access
Day/Date	Thu, 22nd June 2023
Weather	Fine
Description	Classified Intersection Count
	Hourly Summary

MATRIX Traffic and Transport Data

Michael Faraday Ave

Time Period	Direction 1 (Left Turn) MC	Cars	LGV	OGV1	OGV2	PSV	Total	Direction 2 (Through) MC	Cars	LGV	OGV1	OGV2	PSV	Total	Direction 3 (Right Turn) MC	Cars	LGV	OGV1	OGV2	PSV	Total	Direction 92 (U Turn) MC	Cars	LGV	OGV1	OGV2	PSV	Total
07:00 to 08:00	0	5	0	0	0	0	5	1	53	0	2	1	0	57	0	0	0	0	0	0	0	0	0	0	0	0	0	0
07:15 to 08:15	0	1	0	0	0	0	1	1	63	0	2	1	0	67	0	0	0	0	0	0	0	0	0	0	0	0	0	0
07:30 to 08:30	0	1	0	0	0	0	1	1	66	0	1	1	0	69	0	0	0	0	0	0	0	0	0	0	0	0	0	0
07:45 to 08:45	0	0	0	0	0	0	0	1	68	0	1	0	0	70	0	0	0	0	0	0	0	0	0	0	0	0	0	0
08:00 to 09:00	0	0	0	0	0	0	0	1	67	0	0	0	0	68	0	0	0	0	0	0	0	0	0	0	0	0	0	0
08:15 to 09:15	0	0	0	0	0	0	0	1	60	0	0	0	0	61	0	0	0	0	0	0	0	0	0	0	0	0	0	0
08:30 to 09:30	0	0	0	0	0	0	0	1	54	0	0	0	0	55	0	0	0	0	0	0	0	0	0	0	0	0	0	0
08:45 to 09:45	0	0	0	0	0	0	0	1	54	0	0	0	0	55	0	0	0	0	0	0	0	0	0	0	0	0	0	0
AM Totals	**0**	**7**	**0**	**0**	**0**	**0**	**7**	**7**	**375**	**0**	**5**	**3**	**0**	**390**	**0**	**0**	**0**	**0**	**0**	**0**	**0**	**0**	**0**	**0**	**0**	**0**	**0**	**0**
09:00 to 10:00	0	0	0	0	0	0	0	1	70	0	0	0	0	71	0	0	0	0	0	0	0	0	0	0	0	0	0	0
09:15 to 10:15	0	0	0	0	0	0	0	1	60	0	0	0	0	61	0	0	0	0	0	0	0	0	0	0	0	0	0	0
09:30 to 10:30	0	0	0	0	0	0	0	1	54	0	0	0	0	55	0	0	0	0	0	0	0	0	0	0	0	0	0	0
09:45 to 10:45	0	0	0	0	0	0	0	1	54	0	0	0	0	55	0	0	0	0	0	0	0	0	0	0	0	0	0	0
Hourly Total	**0**	**0**	**0**	**0**	**0**	**0**	**0**	**4**	**238**	**0**	**0**	**0**	**0**	**242**	**0**	**0**	**0**	**0**	**0**	**0**	**0**	**0**	**0**	**0**	**0**	**0**	**0**	**0**
AM Totals	**0**	**7**	**0**	**0**	**0**	**0**	**7**	**11**	**613**	**0**	**5**	**3**	**0**	**632**	**0**	**0**	**0**	**0**	**0**	**0**	**0**	**0**	**0**	**0**	**0**	**0**	**0**	**0**
10:00 to 11:00	0	0	0	0	0	0	0	1	72	0	0	0	0	73	0	0	0	0	0	0	0	0	0	0	0	0	0	0
10:15 to 11:15	0	0	0	0	0	0	0	1	66	0	0	0	0	67	0	0	0	0	0	0	0	0	0	0	0	0	0	0
10:30 to 11:30	0	0	0	0	0	0	0	1	66	0	0	0	0	67	0	0	0	0	0	0	0	0	0	0	0	0	0	0
10:45 to 11:45	0	0	0	0	0	0	0	1	66	0	0	0	0	67	0	0	0	0	0	0	0	0	0	0	0	0	0	0
Hourly Total	**0**	**0**	**0**	**0**	**0**	**0**	**0**	**4**	**270**	**0**	**0**	**0**	**0**	**274**	**0**	**0**	**0**	**0**	**0**	**0**	**0**	**0**	**0**	**0**	**0**	**0**	**0**	**0**
PM Totals	**0**	**0**	**0**	**0**	**0**	**0**	**0**	**8**	**508**	**0**	**0**	**0**	**0**	**516**	**0**	**0**	**0**	**0**	**0**	**0**	**0**	**0**	**0**	**0**	**0**	**0**	**0**	**0**

Warehouse Access

Time Period	Direction 4 (Left Turn) MC	Cars	LGV	OGV1	OGV2	PSV	Total	Direction 5 (Through) MC	Cars	LGV	OGV1	OGV2	PSV	Total	Direction 6 (Right Turn) MC	Cars	LGV	OGV1	OGV2	PSV	Total	Direction 62 (U Turn) MC	Cars	LGV	OGV1	OGV2	PSV	Total
07:00 to 08:00	0	0	0	0	0	0	0	0	0	0	0	0	0	0	0	0	0	0	0	0	0	0	0	0	0	0	0	0
07:15 to 08:15	0	0	0	0	0	0	0	0	0	0	0	0	0	0	0	0	0	0	0	0	0	0	0	0	0	0	0	0
07:30 to 08:30	0	0	0	0	0	0	0	0	0	0	0	0	0	0	0	0	0	0	0	0	0	0	0	0	0	0	0	0
07:45 to 09:45	0	0	0	0	0	0	0	0	0	0	0	0	0	0	0	0	0	0	0	0	0	0	0	0	0	0	0	0
08:00 to 09:00	0	0	0	0	0	0	0	0	0	0	0	0	0	0	0	0	0	0	0	0	0	0	0	0	0	0	0	0
08:15 to 09:15	0	0	0	0	0	0	0	0	0	0	0	0	0	0	0	0	0	0	0	0	0	0	0	0	0	0	0	0
08:30 to 09:30	0	0	0	0	0	0	0	0	0	0	0	0	0	0	0	0	0	0	0	0	0	0	0	0	0	0	0	0
08:45 to 10:45	0	0	0	0	0	0	0	0	0	0	0	0	0	0	0	0	0	0	0	0	0	0	0	0	0	0	0	0
AM Totals	**0**	**0**	**0**	**0**	**0**	**0**	**0**	**0**	**0**	**0**	**0**	**0**	**0**	**0**	**0**	**0**	**0**	**0**	**0**	**0**	**0**	**0**	**0**	**0**	**0**	**0**	**0**	**0**
09:00 to 10:00	0	0	0	0	0	0	0	0	0	0	0	0	0	0	0	0	0	0	0	0	0	0	0	0	0	0	0	0
09:15 to 10:15	0	0	0	0	0	0	0	0	0	0	0	0	0	0	0	0	0	0	0	0	0	0	0	0	0	0	0	0
09:30 to 10:30	0	0	0	0	0	0	0	0	0	0	0	0	0	0	0	0	0	0	0	0	0	0	0	0	0	0	0	0
09:45 to 11:45	0	0	0	0	0	0	0	0	0	0	0	0	0	0	0	0	0	0	0	0	0	0	0	0	0	0	0	0
Hourly Total	**0**	**0**	**0**	**0**	**0**	**0**	**0**	**0**	**0**	**0**	**0**	**0**	**0**	**0**	**0**	**0**	**0**	**0**	**0**	**0**	**0**	**0**	**0**	**0**	**0**	**0**	**0**	**0**
PM Totals	**0**	**0**	**0**	**0**	**0**	**0**	**0**	**0**	**0**	**0**	**0**	**0**	**0**	**0**	**0**	**0**	**0**	**0**	**0**	**0**	**0**	**0**	**0**	**0**	**0**	**0**	**0**	**0**

Michael Faraday Ave

Time Period	Direction 7 (Left Turn) MC	Cars	LGV	OGV1	OGV2	PSV	Total	Direction 8 (Through) MC	Cars	LGV	OGV1	OGV2	PSV	Total	Direction 9 (Right Turn) MC	Cars	LGV	OGV1	OGV2	PSV	Total	Direction 92 (U Turn) MC	Cars	LGV	OGV1	OGV2	PSV	Total
07:00 to 08:00	0	5	0	0	0	0	5	0	53	0	2	1	0	56	0	0	0	0	0	0	0	0	0	0	0	0	0	0
07:15 to 08:15	0	1	0	0	0	0	1	0	63	0	2	1	0	66	0	0	0	0	0	0	0	0	0	0	0	0	0	0
07:30 to 08:30	0	1	0	0	0	0	1	0	66	0	1	1	0	68	0	0	0	0	0	0	0	0	0	0	0	0	0	0
07:45 to 09:45	0	0	0	0	0	0	0	0	64	0	1	0	0	66	0	0	0	0	0	0	0	0	0	0	0	0	0	0
08:00

Job No.	GB06-7157
Client	Dynamic Transport Planning
Suburb	Rochdale Manchester
Location	1. Michael Faraday Ave / A6193 Sir Isaac Newton Way
Day/Date	Thu, 22nd June 2023
Weather	Fine
Description	Classified Intersection Count
	15 mins Data

	Class 1	Class 2	Class 3	Class 4	Class 5	Class 6
Classifications	MC	CYL	LGV	OGV1	OGV2	BUSES

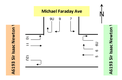

MATRIX Traffic and Transport Data

Approach	A6193 Sir Isaac Newton Way																							
Direction	Direction 5 (Through)							Direction 6 (Right Turn)							Direction 6U (U-Turn)									
Time Period	LVC	LCV	LGV	OGV1	OGV2	Buses	PCU	Total	LVC	LCV	LGV	OGV1	OGV2	Buses	PCU	Total	LVC	LCV	LGV	OGV1	OGV2	Buses	PCU	Total
07:00 - to - 07:15	0	90	14	1	2	1	1	92	0	7	1	1	0	0	0	9	0	0	0	0	0	0	0	0
07:15 - to - 07:30	0	68	14	1	4	1	1	91	0	10	2	0	0	0	0	12	0	1	0	0	0	0	1	1
07:30 - to - 07:45	0	101	24	1	7	1	1	142	0	15	3	0	1	0	0	17	0	0	0	1	0	0	1	1
07:45 - to - 08:00	0	110	20	1	3	0	0	127	0	22	2	0	0	0	0	27	0	0	0	1	0	0	1	1
Hourly Total	**0**	**369**	**72**	**4**	**16**	**3**	**3**	**452**	**0**	**54**	**8**	**1**	**1**	**0**	**0**	**65**	**0**	**1**	**0**	**2**	**0**	**0**	**3**	**3**
08:00 - to - 08:15	0	110	17	1	3	1	1	126	0	16	1	1	1	0	0	19	0	0	0	0	0	0	0	0
08:15 - to - 08:30	0	102	13	0	4	0	0	119	0	15	1	1	1	0	0	20	0	0	0	0	0	0	0	0
08:30 - to - 08:45	0	104	10	0	3	1	1	115	0	9	1	0	0	0	0	10	0	0	0	0	0	0	0	0
08:45 - to - 09:00	0	125	15	1	3	1	1	145	0	10	0	0	0	0	0	10	0	0	0	0	0	0	0	0
Hourly Total	**0**	**440**	**55**	**2**	**13**	**4**	**3**	**505**	**0**	**51**	**3**	**2**	**2**	**0**	**0**	**59**	**0**	**0**	**0**	**0**	**0**	**0**	**0**	**0**
09:00 - to - 09:15	0	99	15	1	3	0	0	114	0	11	0	0	0	0	0	11	0	0	0	1	0	0	1	1
09:15 - to - 09:30	0	75	9	1	3	1	1	90	0	10	1	0	0	0	0	11	0	0	0	0	0	0	0	0
09:30 - to - 09:45	0	57	10	2	1	1	1	69	0	11	0	0	0	0	0	11	0	0	0	0	0	0	0	0
09:45 - to - 10:00	0	62	15	2	2	1	1	87	0	7	2	0	0	0	0	9	0	0	0	0	0	0	0	0
Hourly Total	**0**	**293**	**50**	**6**	**9**	**3**	**3**	**360**	**0**	**39**	**3**	**0**	**0**	**0**	**0**	**42**	**0**	**0**	**0**	**1**	**0**	**0**	**1**	**1**
AM Totals	**0**	**1,056**	**179**	**17**	**38**	**11**	**9**	**1,302**	**0**	**141**	**11**	**3**	**3**	**0**	**0**	**165**	**0**	**1**	**0**	**3**	**0**	**0**	**4**	**4**
10:00 - to - 10:15	0	114	21	0	3	1	1	140	0	9	1	0	0	0	0	10	0	0	0	0	0	0	0	0
10:15 - to - 10:30	0	110	25	0	2	0	0	137	0	7	0	0	0	0	0	7	0	0	0	0	0	0	0	0
10:30 - to - 10:45	0	117	27	0	0	1	1	138	0	7	0	0	0	0	0	7	0	0	0	0	0	0	0	0
10:45 - to - 11:00	0	179	19	1	1	0	0	200	0	7	0	0	0	0	0	7	0	0	0	0	0	0	0	0
Hourly Total	**0**	**520**	**92**	**1**	**6**	**2**	**2**	**615**	**0**	**32**	**1**	**0**	**0**	**0**	**0**	**33**	**0**	**0**	**0**	**0**	**0**	**0**	**0**	**0**
17:00 - to - 17:15	1	173	29	2	1	0	0	214	0	25	2	0	0	0	0	27	0	0	0	0	0	0	0	0
17:15 - to - 17:30	0	135	17	0	1	0	0	150	0	15	0	0	0	0	0	15	0	0	0	0	0	0	0	0
17:30 - to - 17:45	0	119	17	0	0	0	0	135	0	19	0	0	0	0	0	19	0	0	0	0	0	0	0	0
17:45 - to - 18:00	0	129	17	1	1	0	0	148	0	17	0	0	0	0	0	17	0	0	0	0	0	0	0	0
Hourly Total	**1**	**556**	**80**	**3**	**3**	**0**	**0**	**647**	**0**	**76**	**2**	**0**	**0**	**0**	**0**	**78**	**0**	**0**	**0**	**0**	**0**	**0**	**0**	**0**
18:00 - to - 18:15	0	102	14	0	0	0	0	116	0	16	0	0	0	0	0	16	0	0	0	0	0	0	0	0
18:15 - to - 18:30	0	101	17	1	1	0	0	120	0	15	0	0	0	0	0	15	0	0	0	0	0	0	0	0
18:30 - to - 18:45	0	101	10	2	2	0	0	115	0	13	0	0	0	0	0	13	0	0	0	0	0	0	0	0
18:45 - to - 19:00	0	109	12	0	0	0	0	121	0	7	0	0	0	0	0	7	0	0	0	0	0	0	0	0
Hourly Total	**0**	**413**	**53**	**3**	**3**	**0**	**0**	**472**	**0**	**51**	**0**	**0**	**0**	**0**	**0**	**51**	**0**	**0**	**0**	**0**	**0**	**0**	**0**	**0**
PM Totals	**1**	**1,748**	**218**	**31**	**18**	**3**	**3**	**2,076**	**0**	**214**	**4**	**0**	**0**	**0**	**0**	**218**	**0**	**0**	**0**	**0**	**0**	**0**	**0**	**0**

Approach	Michael Faraday Ave																							
Direction	Direction 7 (Left Turn)								Direction 8 (Right Turn)								Direction 9U (U-Turn)							
Time Period	LVC	LCV	LGV	OGV1	OGV2	Buses	PCU	Total	LVC	LCV	LGV	OGV1	OGV2	Buses	PCU	Total	LVC	LCV	LGV	OGV1	OGV2	Buses	PCU	Total
07:00 - to - 07:15	0	5	1	1	0	0	0	8	0	15	3	0	0	0	0	18	0	0	0	0	0	0	0	0
07:15 - to - 07:30	0	8	1	0	2	0	0	14	0	11	1	0	0	0	0	12	0	1	0	0	0	0	1	1
07:30 - to - 07:45	0	10	2	0	1	0	0	14	0	16	0	0	0	0	0	16	0	0	0	0	0	0	0	0
07:45 - to - 08:00	0	14	2	0	1	0	0	18	0	11	1	0	0	0	0	13	0	0	0	0	0	0	0	0
Hourly Total	**0**	**36**	**6**	**0**	**5**	**0**	**0**	**48**	**0**	**53**	**5**	**0**	**0**	**0**	**0**	**58**	**0**	**1**	**0**	**0**	**0**	**0**	**1**	**1**
08:00 - to - 08:15	0	12	2	0	0	0	0	14	0	17	0	0	0	0	0	17	0	0	0	0	0	0	0	0
08:15 - to - 08:30	0	11	2	0	0	0	0	13	0	7	0	0	0	0	0	7	0	0	0	0	0	0	0	0
08:30 - to - 08:45	0	20	1	0	0	0	0	21	0	0	0	0	0	0	0	0	0	0	0	0	0	0	0	0
08:45 - to - 09:00	0	9	1	0	0	0	0	10	0	0	0	0	0	0	0	0	0	0	0	0	0	0	0	0
Hourly Total	**0**	**52**	**6**	**0**	**0**	**0**	**0**	**58**	**0**	**24**	**0**	**0**	**0**	**0**	**0**	**24**	**0**	**0**	**0**	**0**	**0**	**0**	**0**	**0**
09:00 - to - 09:15	0	7	2	0	0	0	0	9	0	0	0	0	0	0	0	0	0	0	0	0	0	0	0	0
09:15 - to - 09:30	0	5	2	0	0	0	0	7	0	0	0	0	0	0	0	0	0	0	0	0	0	0	0	0
09:30 - to - 09:45	0	11	2	0	0	0	0	13	0	0	0	0	0	0	0	0	0	0	0	0	0	0	0	0
09:45 - to - 10:00	0	15	1	0	0	0	0	16	0	0	0	0	0	0	0	0	0	0	0	0	0	0	0	0
Hourly Total	**0**	**38**	**7**	**0**	**0**	**0**	**0**	**45**	**0**	**0**	**0**	**0**	**0**	**0**	**0**	**0**	**0**	**0**	**0**	**0**	**0**	**0**	**0**	**0**
AM Totals	**0**	**158**	**12**	**0**	**5**	**0**	**0**	**173**	**0**	**77**	**5**	**0**	**0**	**0**	**0**	**82**	**0**	**1**	**0**	**0**	**0**	**0**	**1**	**1**
10:00 - to - 10:15	0	12	1	0	0	0	0	13	0	0	0	0	0	0	0	0	0	0	0	0	0	0	0	0
10:15 - to - 10:30	0	12	1	0	0	0	0	13	0	0	0	0	0	0	0	0	0	0	0	0	0	0	0	0
10:30 - to - 10:45	0	11	1	0	0	0	0	12	0	0	0	0	0	0	0	0	0	0	0	0	0	0	0	0
10:45 - to - 11:00	0	12	1	0	0	0	0	13	0	0	0	0	0	0	0	0	0	0	0	0	0	0	0	0
Hourly Total	**0**	**48**	**4**	**0**	**0**	**0**	**0**	**52**	**0**	**0**	**0**	**0**	**0**	**0**	**0**	**0**	**0**	**0**	**0**	**0**	**0**	**0**	**0**	**0**
17:00 - to - 17:15	0	11	1	0	1	0	0	14	0	0	0	0	0	0	0	0	0	0	0	0	0	0	0	0
17:15 - to - 17:30	0	13	1	0	0	0	0	14	0	0	0	0	0	0	0	0	0	0	0	0	0	0	0	0
17:30 - to - 17:45	0	10	0	0	0	0	0	10	0	0	0	0	0	0	0	0	0	0	0	0	0	0	0	0
17:45 - to - 18:00	0	7	0	1	0	0	0	9	0	0	0	0	0	0	0	0	0	0	0	0	0	0	0	0
Hourly Total	**0**	**41**	**2**	**1**	**1**	**0**	**0**	**47**	**0**	**0**	**0**	**0**	**0**	**0**	**0**	**0**	**0**	**0**	**0**	**0**	**0**	**0**	**0**	**0**
PM Totals	**0**	**89**	**6**	**1**	**2**	**0**	**0**	**98**	**0**	**0**	**0**	**0**	**0**	**0**	**0**	**0**	**0**	**0**	**0**	**0**	**0**	**0**	**0**	**0**

Approach	A6193 Sir Isaac Newton Way																							
Direction	Direction 10 (Left Turn)								Direction 11 (Through)								Direction 12U (U-Turn)							
Time Period	LVC	LCV	LGV	OGV1	OGV2	Buses	PCU	Total	LVC	LCV	LGV	OGV1	OGV2	Buses	PCU	Total	LVC	LCV	LGV	OGV1	OGV2	Buses	PCU	Total
07:00 - to - 07:15	0	0	0	0	0	0	0	0	0	90	7	1	1	1	1	102	0	0	0	0	0	0	0	0
07:15 - to - 07:30	0	1	1	0	0	0	1	1	0	68	14	1	4	1	1	91	0	0	0	0	0	0	0	0
07:30 - to - 07:45	0	1	1	0	0	0	1	1	0	101	24	1	7	1	1	142	0	0	0	0	0	0	0	0
07:45 - to - 08:00	0	0	0	0	0	0	0	0	0	110	20	1	3	0	0	127	0	0	0	0	0	0	0	0
Hourly Total	**0**	**2**	**2**	**0**	**0**	**0**	**2**	**2**	**0**	**369**	**72**	**4**	**16**	**3**	**3**	**452**	**0**	**0**	**0**	**0**	**0**	**0**	**0**	**0**
08:00 - to - 08:15	0	0	0	0	0	0	0	0	0	110	17	1	3	1	1	126	0	0	0	0	0	0	0	0
08:15 - to - 08:30	0	0	0	0	0	0	0	0	0	101	13	0	4	0	0	119	0	0	0	0	0	0	0	0
08:30 - to - 08:45	0	0	0	0	0	0	0	0	0	89	10	0	3	1	1	103	0	0	0	0	0	0	0	0
08:45 - to - 09:00	0	0	0	0	0	0	0	0	0	94	15	1	3	1	1	115	0	0	0	0	0	0	0	0
Hourly Total	**0**	**0**	**0**	**0**	**0**	**0**	**0**	**0**	**0**	**394**	**55**	**2**	**13**	**4**	**3**	**463**	**0**	**0**	**0**	**0**	**0**	**0**	**0**	**0**
09:00 - to - 09:15	0	0	0	0	0	0	0	0	0	99	15	1	3	0	0	114	0	0	0	1	0	0	1	1
09:15 - to - 09:30	0	0	0	0	0	0	0	0	0	75	9	1	3	1	1	90	0	0	0	0	0	0	0	0
09:30 - to - 09:45	0	0	0	0	0	0	0	0	0	57	10	2	1	1	1	69	0	0	0	0	0	0	0	0
09:45 - to - 10:00	0	0	0	0	0	0	0	0	0	62	15	2	2	1	1	87	0	0	0	0	0	0	0	0
Hourly Total	**0**	**0**	**0**	**0**	**0**	**0**	**0**	**0**	**0**	**293**	**50**	**6**	**9**	**3**	**3**	**360**	**0**	**0**	**0**	**1**	**0**	**0**	**1**	**1**
AM Totals	**0**	**2**	**2**	**0**	**0**	**0**	**2**	**2**	**0**	**1,056**	**179**	**17**	**38**	**11**	**9**	**1,302**	**0**	**1**	**0**	**3**	**0**	**0**	**4**	**4**
10:00 - to - 10:15	0	0	0	0	0	0	0	0	0	114	21	0	3	1	1	140	0	0	0	0	0	0	0	0
10:15 - to - 10:30	0	0	0	0	0	0	0	0	0	110	25	0	2	0	0	137	0	0	0	0	0	0	0	0
10:30 - to - 10:45	0	0	0	0	0	0	0	0	0	117	27	0	0	1	1	138	0	0	0	0	0	0	0	0
10:45 - to - 11:00	0	0	0	0	0	0	0	0	0	179	19	1	1	0	0	200	0	0	0	0	0	0	0	0
Hourly Total	**0**	**0**	**0**	**0**	**0**	**0**	**0**	**0**	**0**	**520**	**92**	**1**	**6**	**2**	**2**	**615**	**0**	**0**	**0**	**0**	**0**	**0**	**0**	**0**
17:00 - to - 17:15	0	0	0	0	0	0	0	0	1	173	29	2	1	0	0	214	0	0	0	0	0	0	0	0
17:15 - to - 17:30	0	0	0	0	0	0	0	0	0	135	17	0	1	0	0	150	0	0	0	0	0	0	0	0
17:30 - to - 17:45	0	0	0	0	0	0	0	0	0	119	17	0	0	0	0	135	0	0	0	0	0	0	0	0
17:45 - to - 18:00	0	0	0	0	0	0	0	0	0	129	17	1	1	0	0	148	0	0	0	0	0	0	0	0
Hourly Total	**0**	**0**	**0**	**0**	**0**	**0**	**0**	**0**	**1**	**556**	**80**	**3**	**3**	**0**	**0**	**647**	**0**	**0**	**0**	**0**	**0**	**0**	**0**	**0**
18:00 - to - 18:15	0	0	0	0	0	0	0	0	0	102	14	0	0	0	0	116	0	0	0	0	0	0	0	0
18:15 - to - 18:30	0	0	0	0	0	0	0	0	0	101	17	1	1	0	0	120	0	0	0	0	0	0	0	0
18:30 - to - 18:45	0	0	0	0	0	0	0	0	0	101	10	2	2	0	0	115	0	0	0	0	0	0	0	0
18:45 - to - 19:00	0	0	0	0	0	0	0	0	0	109	12	0	0	0	0	121	0	0	0	0	0	0	0	0
Hourly Total	**0**	**0**	**0**	**0**	**0**	**0**	**0**	**0**	**0**	**413**	**53**	**3**	**3**	**0**	**0**	**472**	**0**	**0**	**0**	**0**	**0**	**0**	**0**	**0**
PM Totals	**0**	**0**	**0**	**0**	**0**	**0**	**0**	**0**	**1**	**1,748**	**218**	**31**	**18**	**3**	**3**	**2,076**	**0**	**0**	**0**	**0**	**0**	**0**	**0**	**0**

Job No.	GB06-7157
Client	Dynamic Transport Planning
Suburb	Rochdale Manchester
Location	2. Michael Faraday Ave / A6193 Sir Isaac Newton Way
Day/Date	Thu, 22nd June 2023
Weather	Fine
Description	Classified Intersection Count
	Hourly Summary

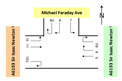

MATRIX Traffic and Transport Data

Approach	A6193 Sir Isaac Newton Way																							
Direction	Direction 5 (Through)							Direction 6 (Right Turn)							Direction 6U (U-Turn)									
Time Period	LVC	LCV	LGV	OGV1	OGV2	Buses	PCU	Total	LVC	LCV	LGV	OGV1	OGV2	Buses	PCU	Total	LVC	LCV	LGV	OGV1	OGV2	Buses	PCU	Total
07:00 - to - 08:00	0	328	62	4	14	3	3	402	0	41	5	2	1	0	0	51	0	1	0	2	0	0	3	3
07:15 - to - 08:15	0	395	81	3	16	3	3	512	0	58	5	1	2	0	0	70	0	1	0	2	0	0	3	3
07:30 - to - 08:30	0	428	84	3	20	3	3	538	0	63	4	1	3	0	0	76	0	0	0	2	0	0	2	2
07:45 - to - 08:45	0	428	80	3	22	3	3	542	0	67	5	1	2	0	0	75	0	0	0	1	0	0	2	1
08:00 - to - 09:00	0	440	55	2	13	4	3	505	0	51	3	2	2	0	0	59	0	0	0	0	0	0	0	0
08:15 - to - 09:15	0	426	61	2	20	2	3	500	0	51	2	1	1	0	0	57	0	0	0	1	0	0	2	1
08:30 - to - 09:30	0	390	57	2	21	1	3	464	0	46	2	0	0	0	0	48	0	0	0	1	0	0	2	1
08:45 - to - 09:45	0	347	62	3	19	2	3	438	0	44	1	0	0	0	0	45	0	0	0	1	0	0	2	1
09:00 - to - 10:00	0	348	54	3	18	4	3	415	0	39	3	0	0	0	0	42	0	0	0	1	0	0	2	1
AM Totals	**0**	**1,056**	**179**	**17**	**38**	**11**	**9**	**1,302**	**0**	**141**	**11**	**3**	**3**	**0**	**0**	**165**	**0**	**1**	**0**	**3**	**0**	**0**	**4**	**4**
10:00 - to - 11:00	0	345	69	0	8	3	3	425	0	32	1	0	0	0	0	33	0	0	0	0	0	0	0	0
10:15 - to - 17:15	1	610	98	10	6	2	3	734	0	69	2	0	0	0	0	70	0	0	0	0	0	0	0	0
10:30 - to - 17:30	1	618	92	14	3	2	3	732	0	63	2	0	0	0	0	65	0	0	0	0	0	0	0	0
10:45 - to - 17:45	1	609	82	20	3	0	3	719	0	64	2	0	0	0	0	66	0	0	0	0	0	0	0	0
17:00 - to - 18:00	1	591	61	10	1	0	2	657	0	63	2	0	0	0	0	65	0	0	0	0	0	0	0	0
17:15 - to - 18:15	0	545	70	17	2	0	3	645	0	63	2	0	0	0	0	65	0	0	0	0	0	0	0	0
17:30 - to - 18:30	0	571	70	15	4	0	3	663	0	114	5	0	0	0	0	119	0	0	0	0	0	0	0	0
17:45 - to - 18:45	0	425	53	11	6	0	3	498	0	94	5	0	0	0	0	99	0	0	0	0	0	0	0	0
18:00 - to - 19:00	0	419	53	4	5	0	3	483	0	69	5	0	0	0	0	74	0	0	0	0	0	0	0	0
PM Totals	**1**	**2,748**	**228**	**91**	**18**	**2**	**3**	**3,076**	**0**	**214**	**8**	**0**	**0**	**0**	**0**	**222**	**0**	**0**	**0**	**0**	**0**	**0**	**0**	**0**

Approach	Michael Faraday Ave																							
Direction	Direction 7 (Left Turn)								Direction 8 (Right Turn)								Direction 9U (U-Turn)							
Time Period	LVC	LCV	LGV	OGV1	OGV2	Buses	PCU	Total	LVC	LCV	LGV	OGV1	OGV2	Buses	PCU	Total	LVC	LCV	LGV	OGV1	OGV2	Buses	PCU	Total
07:00 - to - 08:00	0	29	5	3	4	0	1	42	0	56	6	0	0	0	0	62	0	1	0	0	0	0	1	1
07:15 - to - 08:15	0	36	6	0	6	0	0	50	0	54	6	0	0	0	0	60	0	1	0	0	0	0	1	1
07:30 - to - 08:30	0	39	6	0	6	0	0	51	0	60	6	0	0	0	0	66	0	0	0	0	0	0	0	0
07:45 - to - 08:45	0	40	5	0	4	0	0	45	0	66	7	1	0	0	0	74	0	0	0	0	0	0	0	0
08:00 - to - 09:00	0	42	4	0	4	0	0	50	0	63	5	1	0	0	0	69	0	0	0	0	0	0	0	0
08:15 - to - 09:15	1	34	5	1	5	0	0	46	0	60	5	1	0	0	0	66	0	0	0	0	0	0	0	0
08:30 - to - 09:30	1	29	5	1	5	0	0	41	0	47	5	1	0	0	0	53	0	0	0	0	0	0	0	0
08:45 - to - 09:45	1	28	4	0	2	0	0	35	0	50	4	0	0	0	0	54	0	0	0	0	0	0	0	0
09:00 - to - 10:00	1	21	4	0	2	0	0	29	0	49	3	0	0	0	0	52	0	0	0	0	0	0	0	0
AM Totals	**3**	**70**	**14**	**12**	**12**	**0**	**1**	**112**	**0**	**215**	**17**	**3**	**0**	**0**	**0**	**235**	**0**	**1**	**0**	**0**	**0**	**0**	**1**	**1**
10:00 - to - 11:00	1	48	5	0	2	0	0	56	0	64	3	0	0	0	0	67	0	0	0	0	0	0	0	0
10:15 - to - 17:15	0	25	4	1	1	0	0	31	0	61	3	0	0	0	0	64	0	0	0	0	0	0	0	0
10:30 - to - 17:30	0	15	3	0	2	0	0	21	0	60	3	0	0	0	0	63	0	0	0	0	0	0	0	0
10:45 - to - 17:45	0	21	1	0	2	0	0	27	0	53	3	0	0	0	0	56	0	0	0	0	0	0	0

Appendix 2
Proposed Site Layout

THIS DOCUMENT AND ALL INFORMATION CONTAINED HEREIN IS CONFIDENTIAL AND THE INTELLECTUAL PROPERTY OF ADS DESIGN. IT IS DISCLOSED IN CONFIDENCE ON TERMS THAT IT WILL NOT BE DISCLOSED TO ANY THIRD PARTY, USED, SOLD, LOANED, LICENSED OR REPRODUCED IN WHOLE OR IN PART IN ANY MANNER OR FORM FOR MANUFACTURING, TENDERING OR FOR ANY OTHER PURPOSE WITHOUT THE WRITTEN PERMISSION OF ADS DESIGN.
© ADS DESIGN

Key

- Site boundary Site Area 13,910.8sqm / 3.437acres
- Black Bitmac finish
- Red Bitmac finish
- Grey Block Paving
- Concrete
- Concrete Apron
- Concrete Apron Double reinforced concrete to delivery stand
- Kerb
- Pin Kerb
- DK Drop Kerb
- Stainless steel bollard
- Soft Landscaping
- Tactile paving
- 0.6m high timber knee rail
- 1.2m high timber post and rail fence
- 1.8m high close boarded timber fence
- 2m high reflective noise barrier fence with a minimum mass of 12kg/m²
- Non illuminated signage
- NE Non illuminated sign NO ENTRY
- GW Non illuminated sign GIVE WAY
- NE GW Non illuminated sign NO ENTRY / GIVE WAY
- Pedestrian Route Tactile paving and dropped kerbs at all appropriate points along the route to DDA standards within site demise

0m 5 10 15 20 25
Scale Bar

C	16.10.23	ANNOTATION REVISED
B	13.10.23	NOISE BARRIER FENCE ADDED. SEATING INDICATED
A	27.09.23	INTERNAL SPINE ROAD WIDENED, 2no JET WASHES, 2no SERVICE BAYS

REVISIONS ^

CLIENT	EURO GARAGES LTD
PROJECT	SIR ISAAC NEWTON WAY, ROCHDALE OL16 4PS
TITLE	PROPOSED SITE LAYOUT
DATE	22.09.23
SCALE	1:250 @ A1
JOB ID	1826
DWG	8c

ADS DESIGN
+44 (0)1943 464152
ADS-DESIGN.NET

Appendix 3
Swept Path Assessment

Proposed Site Layout - Scale 1/500

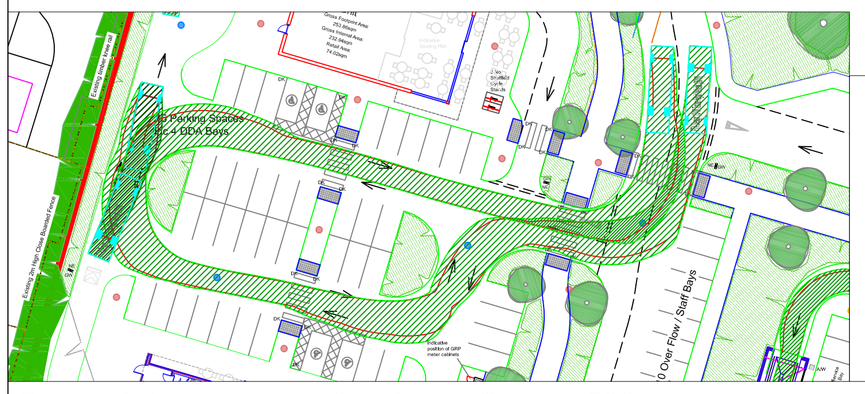

Swept Path Analysis- 10m Rigid - Scale 1/500

NTS

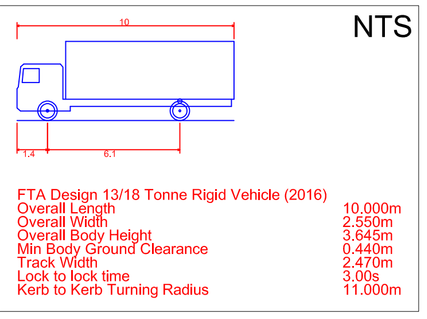

FTA Design 13/18 Tonne Rigid Vehicle (2016)

Overall Length	10.000m
Overall Width	2.550m
Overall Body Height	3.645m
Min Body Ground Clearance	0.440m
Track Width	2.470m
Lock to lock time	3.00s
Kerb to Kerb Turning Radius	11.000m

Swept Path Analysis - Large Car - Scale 1/250

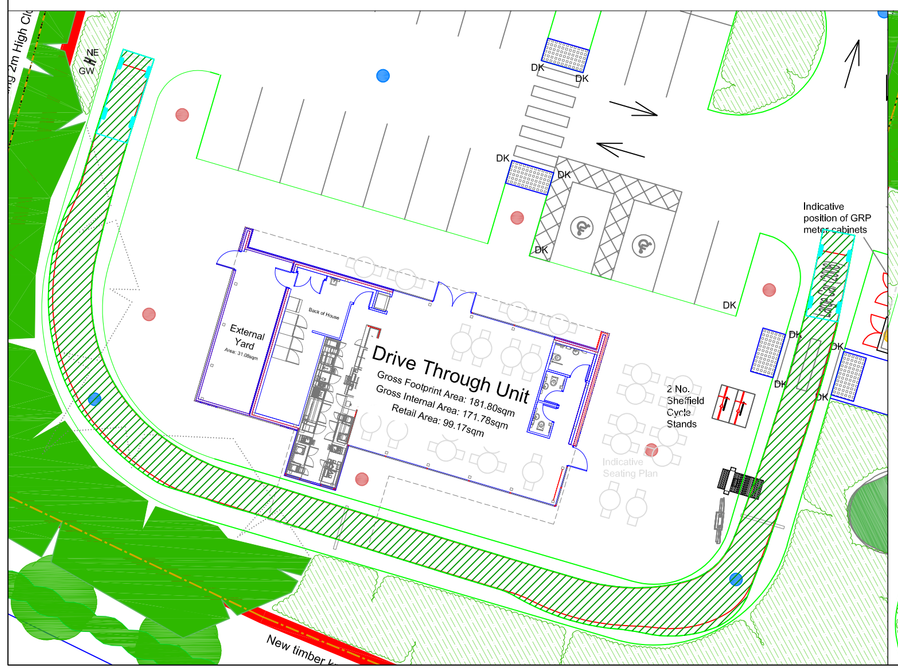

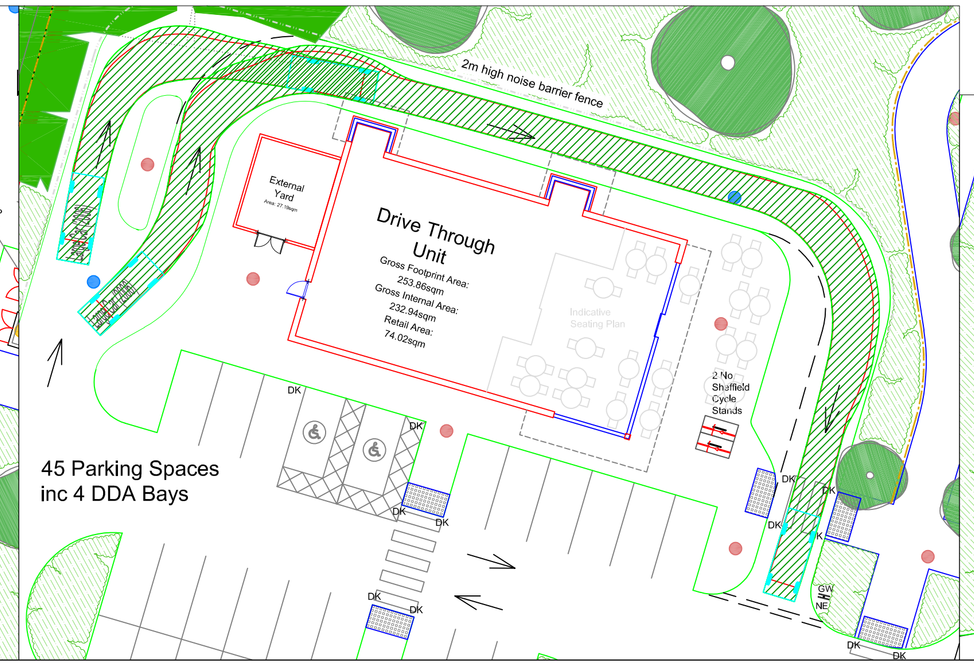

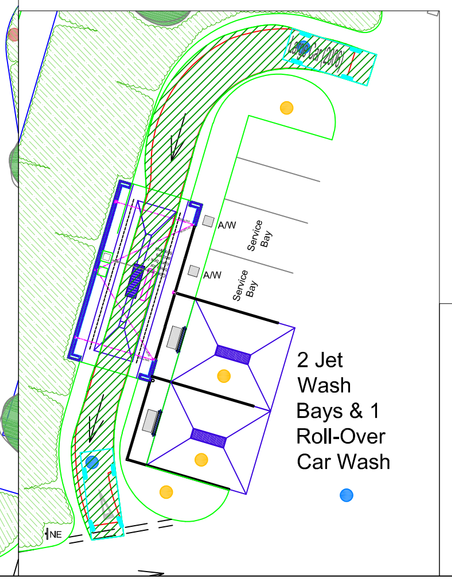

Large Car (2006)

Overall Length	5.079m
Overall Width	1.872m
Overall Body Height	1.525m
Min Body Ground Clearance	0.310m
Max Track Width	1.831m
Lock to lock time	4.00s
Kerb to Kerb Turning Radius	5.900m

NTS

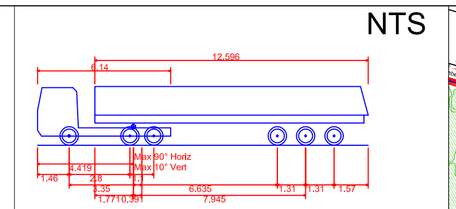

Oil Tanker ASDA Update

Overall Length	15.244m
Overall Width	2.500m
Overall Body Height	2.704m
Min Body Ground Clearance	0.419m
Track Width	2.450m
Lock to lock time	4.00s
Kerb to Kerb Turning Radius	5.500m

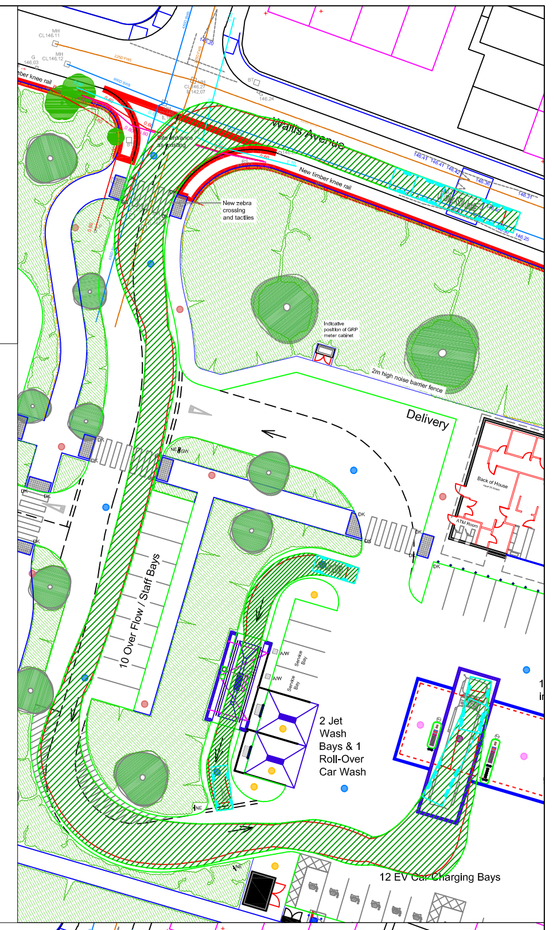

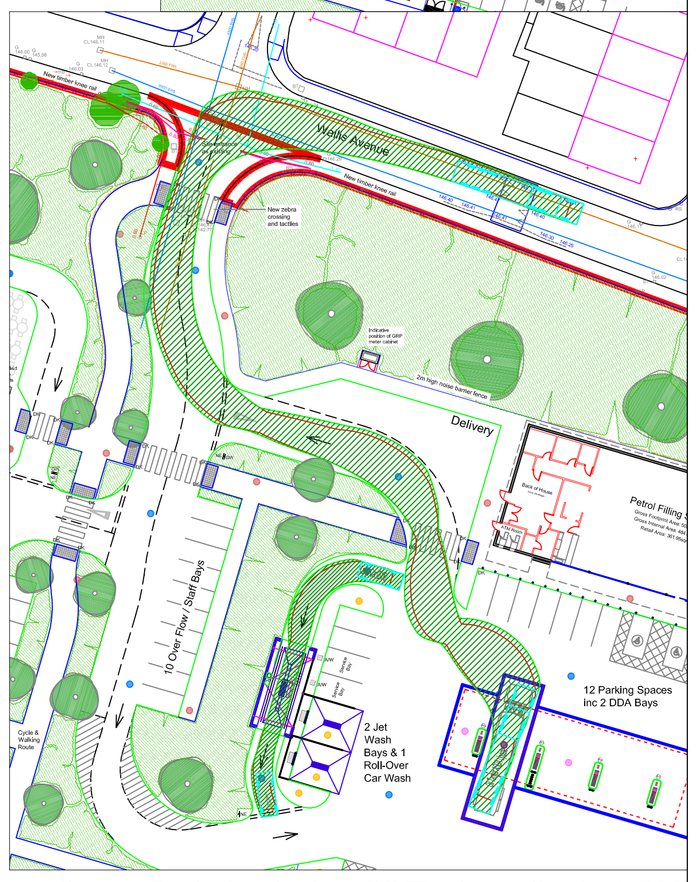

Swept Path Analysis - Oil Tanker - Scale 1/500

Notes

Rev.	Date	Revisions	Drawn
C	17/10/23	Minor Site Layout Update	BF
B	16/10/23	Minor Site Layout Update	BF
A	27/09/23	Minor Site Layout Update	JB
-	08/09/23	First Issue	BF

DYNAMIC TRANSPORT PLANNING
+44 (0) 7411 751 693
www.dynamictransportplanning.co.uk
enquiries@dynamictransportplanning.co.uk

Client
EG Group Ltd

Project
Proposed Mixed-Use Development, A6193, Kingsway Business Park, Rochdale

Drawing Title
Proposed Site Layout
Swept Path Analysis
10m Rigid, Asda Oil Tanker & Large Car

Date	Scale
September 2023	As Specified @ A1
Drawn: BF	Approved: GS

Drawing Number: DTP/3705023/ATR001
Rev.: C

Appendix 4
TRICS Output Report

Calculation Reference: AUDIT-262601-230919-0907

TRIP RATE CALCULATION SELECTION PARAMETERS:

Land Use : 13 - PETROL FILLING STATIONS
Category : B - PFS - WITH RETAIL

TOTAL VEHICLES

Selected regions and areas:

03	**SOUTH WEST**		
	BR	BRISTOL CITY	1 days
	TB	TORBAY	1 days
05	**EAST MIDLANDS**		
	DY	DERBY	1 days
	LN	LINCOLNSHIRE	1 days
06	**WEST MIDLANDS**		
	WO	WORCESTERSHIRE	1 days
07	**YORKSHIRE & NORTH LINCOLNSHIRE**		
	NY	NORTH YORKSHIRE	1 days
08	**NORTH WEST**		
	GM	GREATER MANCHESTER	1 days
	LC	LANCASHIRE	1 days
10	**WALES**		
	MM	MONMOUTHSHIRE	1 days

This section displays the number of survey days per TRICS® sub-region in the selected set

Primary Filtering selection:

This data displays the chosen trip rate parameter and its selected range. Only sites that fall within the parameter range are included in the trip rate calculation.

Parameter:	Filling bays
Actual Range:	8 to 12 (units:)
Range Selected by User:	4 to 16 (units:)

Parking Spaces Range: All Surveys Included

Public Transport Provision:
Selection by: Include all surveys

Date Range: 01/01/15 to 19/10/22

This data displays the range of survey dates selected. Only surveys that were conducted within this date range are included in the trip rate calculation.

Selected survey days:

Monday	1 days
Tuesday	3 days
Wednesday	2 days
Friday	3 days

This data displays the number of selected surveys by day of the week.

Selected survey types:

Manual count	9 days
Directional ATC Count	0 days

This data displays the number of manual classified surveys and the number of unclassified ATC surveys, the total adding up to the overall number of surveys in the selected set. Manual surveys are undertaken using staff, whilst ATC surveys are undertaking using machines.

Selected Locations:

Suburban Area (PPS6 Out of Centre)	5
Edge of Town	3
Neighbourhood Centre (PPS6 Local Centre)	1

This data displays the number of surveys per main location category within the selected set. The main location categories consist of Free Standing, Edge of Town, Suburban Area, Neighbourhood Centre, Edge of Town Centre, Town Centre and Not Known.

Selected Location Sub Categories:

Industrial Zone	1
Residential Zone	6
Retail Zone	1
No Sub Category	1

This data displays the number of surveys per location sub-category within the selected set. The location sub-categories consist of Commercial Zone, Industrial Zone, Development Zone, Residential Zone, Retail Zone, Built-Up Zone, Village, Out of Town, High Street and No Sub Category.

Inclusion of Servicing Vehicles Counts:

Servicing vehicles Included	3 days - Selected
Servicing vehicles Excluded	15 days - Selected

Secondary Filtering selection:

Use Class:

Sui Generis	9 days

This data displays the number of surveys per Use Class classification within the selected set. The Use Classes Order (England) 2020 has been used for this purpose, which can be found within the Library module of TRICS®.

Population within 500m Range:
All Surveys Included
Population within 1 mile:

10,001 to 15,000	4 days
15,001 to 20,000	2 days
20,001 to 25,000	3 days

This data displays the number of selected surveys within stated 1-mile radii of population.

Population within 5 miles:

50,001 to 75,000	1 days
75,001 to 100,000	1 days
125,001 to 250,000	4 days
250,001 to 500,000	3 days

This data displays the number of selected surveys within stated 5-mile radii of population.

Car ownership within 5 miles:

0.5 or Less	1 days
0.6 to 1.0	5 days
1.1 to 1.5	2 days
1.6 to 2.0	1 days

This data displays the number of selected surveys within stated ranges of average cars owned per residential dwelling, within a radius of 5-miles of selected survey sites.

Travel Plan:

No	9 days

This data displays the number of surveys within the selected set that were undertaken at sites with Travel Plans in place, and the number of surveys that were undertaken at sites without Travel Plans.

PTAL Rating:

No PTAL Present	9 days

This data displays the number of selected surveys with PTAL Ratings.

Covid-19 Restrictions	Yes	At least one survey within the selected data set was undertaken at a time of Covid-19 restrictions

LIST OF SITES relevant to selection parameters

1 BR-13-B-02 TESCO EXTRA PFS BRISTOL CITY
EASTGATE ROAD
BRISTOL

Suburban Area (PPS6 Out of Centre)
Retail Zone
Total Filling bays: 12
Survey date: TUESDAY 09/11/21 Survey Type: MANUAL

2 DY-13-B-01 ESSO & TESCO EXPRESS DERBY
NOTTINGHAM ROAD
DERBY
CHADDESDEN
Suburban Area (PPS6 Out of Centre)
Residential Zone
Total Filling bays: 8
Survey date: FRIDAY 26/06/15 Survey Type: MANUAL

3 GM-13-B-01 BP & SPAR GREATER MANCHESTER
NEW STREET
ROCHDALE
MILNROW
Edge of Town
Residential Zone
Total Filling bays: 8
Survey date: WEDNESDAY 21/10/15 Survey Type: MANUAL

4 LC-13-B-03 TEXACO & MORRISONS DAILY LANCASHIRE
GARSTANG ROAD
PRESTON
FULWOOD
Suburban Area (PPS6 Out of Centre)
Residential Zone
Total Filling bays: 8
Survey date: TUESDAY 06/11/18 Survey Type: MANUAL

5 LN-13-B-01 GULF & CO-OP LINCOLNSHIRE
CARHOLME ROAD
LINCOLN

Edge of Town
Residential Zone
Total Filling bays: 8
Survey date: WEDNESDAY 04/10/17 Survey Type: MANUAL

6 MM-13-B-01 BP & M&S SIMPLY FOOD MONMOUTHSHIRE
MALPAS ROAD
NEWPORT
MALPAS
Neighbourhood Centre (PPS6 Local Centre)
Residential Zone
Total Filling bays: 8
Survey date: FRIDAY 27/09/19 Survey Type: MANUAL

7 NY-13-B-03 ESSO & CO-OP NORTH YORKSHIRE
WETHERBY ROAD NORTH
KNARESBOROUGH

Suburban Area (PPS6 Out of Centre)
Industrial Zone
Total Filling bays: 8
Survey date: FRIDAY 30/09/16 Survey Type: MANUAL

8 TB-13-B-01 BP & COSTCUTTER TORBAY
TORBAY ROAD
PAIGNTON

Edge of Town
Residential Zone
Total Filling bays: 8
Survey date: TUESDAY 18/07/17 Survey Type: MANUAL

LIST OF SITES relevant to selection parameters (Cont.)

9 WO-13-B-02 MORRISONS PFS WORCESTERSHIRE
CLEARWELL ROAD
REDDITCH
WINYATES WEST
Suburban Area (PPS6 Out of Centre)
No Sub Category
Total Filling bays: 12
Survey date: MONDAY 05/10/20 Survey Type: MANUAL

This section provides a list of all survey sites and days in the selected set. For each individual survey site, it displays a unique site reference code and site address, the selected trip rate calculation parameter and its value, the day of the week and date of each survey, and whether the survey was a manual classified count or an ATC count.

TRIP RATE for Land Use 13 - PETROL FILLING STATIONS/B - PFS - WITH RETAIL

TOTAL VEHICLES

Calculation factor: 1 BAYS

BOLD print indicates peak (busiest) period

	ARRIVALS			DEPARTURES			TOTALS		
Time Range	No. Days	Ave. BAYS	Trip Rate	No. Days	Ave. BAYS	Trip Rate	No. Days	Ave. BAYS	Trip Rate
00:00 - 01:00									
01:00 - 02:00									
02:00 - 03:00									
03:00 - 04:00									
04:00 - 05:00									
05:00 - 06:00									
06:00 - 07:00	9	9	5.075	9	9	4.713	9	9	9.788
07:00 - 08:00	9	9	8.037	9	9	7.912	9	9	15.949
08:00 - 09:00	9	9	7.600	9	9	7.438	9	9	15.038
09:00 - 10:00	9	9	8.113	9	9	8.075	9	9	16.188
10:00 - 11:00	9	9	7.263	9	9	7.200	9	9	14.463
11:00 - 12:00	9	9	7.075	9	9	7.138	9	9	14.213
12:00 - 13:00	**9**	**9**	**8.563**	9	9	8.600	9	9	17.162
13:00 - 14:00	9	9	8.550	**9**	**9**	**8.662**	**9**	**9**	**17.212**
14:00 - 15:00	9	9	8.125	9	9	8.012	9	9	16.137
15:00 - 16:00	9	9	7.912	9	9	8.150	9	9	16.062
16:00 - 17:00	9	9	8.100	9	9	8.175	9	9	16.275
17:00 - 18:00	9	9	8.325	9	9	8.325	9	9	16.650
18:00 - 19:00	9	9	7.862	9	9	7.925	9	9	15.787
19:00 - 20:00	9	9	7.250	9	9	7.213	9	9	14.463
20:00 - 21:00	9	9	4.838	9	9	4.888	9	9	9.726
21:00 - 22:00	9	9	3.650	9	9	3.663	9	9	7.313
22:00 - 23:00	3	11	1.094	3	11	1.250	3	11	2.344
23:00 - 24:00	2	10	0.450	2	10	0.650	2	10	1.100
Total Rates:			117.881			117.989			235.870

This section displays the trip rate results based on the selected set of surveys and the selected count type (shown just above the table). It is split by three main columns, representing arrivals trips, departures trips, and total trips (arrivals plus departures). Within each of these main columns are three sub-columns. These display the number of survey days where count data is included (per time period), the average value of the selected trip rate calculation parameter (per time period), and the trip rate result (per time period). Total trip rates (the sum of the column) are also displayed at the foot of the table.

*To obtain a trip rate, the average (mean) trip rate parameter value (TRP) is first calculated for all selected survey days that have count data available for the stated time period. The average (mean) number of arrivals, departures or totals (whichever applies) is also calculated (COUNT) for all selected survey days that have count data available for the stated time period. Then, the average count is divided by the average trip rate parameter value, and multiplied by the stated calculation factor (shown just above the table and abbreviated here as FACT). So, the method is: COUNT/TRP*FACT. Trip rates are then rounded to 3 decimal places.*

The survey data, graphs and all associated supporting information, contained within the TRICS Database are published by TRICS Consortium Limited ("the Company") and the Company claims copyright and database rights in this published work. The Company authorises those who possess a current TRICS licence to access the TRICS Database and copy the data contained within the TRICS Database for the licence holders' use only. Any resulting copy must retain all copyrights and other proprietary notices, and any disclaimer contained thereon.

The Company accepts no responsibility for loss which may arise from reliance on data contained in the TRICS Database. [No warranty of any kind, express or implied, is made as to the data contained in the TRICS Database.]

Parameter summary

Trip rate parameter range selected:	8 - 12 (units:)
Survey date date range:	01/01/15 - 19/10/22
Number of weekdays (Monday-Friday):	9
Number of Saturdays:	0
Number of Sundays:	0
Surveys automatically removed from selection:	0
Surveys manually removed from selection:	0

This section displays a quick summary of some of the data filtering selections made by the TRICS® user. The trip rate calculation parameter range of all selected surveys is displayed first, followed by the range of minimum and maximum survey dates selected by the user. Then, the total number of selected weekdays and weekend days in the selected set of surveys are show. Finally, the number of survey days that have been manually removed from the selected set outside of the standard filtering procedure are displayed.

Calculation Reference: AUDIT-262601-230412-0411

TRIP RATE CALCULATION SELECTION PARAMETERS:

Land Use : 06 - HOTEL, FOOD & DRINK
Category : J - DRIVE THROUGH COFFEE SHOP

TOTAL VEHICLES

Selected regions and areas:

04	**EAST ANGLIA**		
	SF	SUFFOLK	1 days
05	**EAST MIDLANDS**		
	NM	WEST NORTHAMPTONSHIRE	1 days
	NN	NORTH NORTHAMPTONSHIRE	1 days
06	**WEST MIDLANDS**		
	WO	WORCESTERSHIRE	1 days
11	**SCOTLAND**		
	PK	PERTH & KINROSS	1 days

This section displays the number of survey days per TRICS® sub-region in the selected set

Primary Filtering selection:

This data displays the chosen trip rate parameter and its selected range. Only sites that fall within the parameter range are included in the trip rate calculation.

Parameter:	Gross floor area
Actual Range:	140 to 240 (units: sqm)
Range Selected by User:	125 to 420 (units: sqm)

Parking Spaces Range: All Surveys Included

Public Transport Provision:
Selection by: Include all surveys

Date Range: 01/01/15 to 15/05/22

This data displays the range of survey dates selected. Only surveys that were conducted within this date range are included in the trip rate calculation.

Selected survey days:

Wednesday	1 days
Friday	4 days

This data displays the number of selected surveys by day of the week.

Selected survey types:

Manual count	5 days
Directional ATC Count	0 days

This data displays the number of manual classified surveys and the number of unclassified ATC surveys, the total adding up to the overall number of surveys in the selected set. Manual surveys are undertaken using staff, whilst ATC surveys are undertaking using machines.

Selected Locations:

Suburban Area (PPS6 Out of Centre)	2
Edge of Town	3

This data displays the number of surveys per main location category within the selected set. The main location categories consist of Free Standing, Edge of Town, Suburban Area, Neighbourhood Centre, Edge of Town Centre, Town Centre and Not Known.

Selected Location Sub Categories:

Industrial Zone	3
Residential Zone	1
No Sub Category	1

This data displays the number of surveys per location sub-category within the selected set. The location sub-categories consist of Commercial Zone, Industrial Zone, Development Zone, Residential Zone, Retail Zone, Built-Up Zone, Village, Out of Town, High Street and No Sub Category.

Inclusion of Servicing Vehicles Counts:

Servicing vehicles Included	X days - Selected
Servicing vehicles Excluded	5 days - Selected

Secondary Filtering selection:

Use Class:

Not Known	5 days

This data displays the number of surveys per Use Class classification within the selected set. The Use Classes Order (England) 2020 has been used for this purpose, which can be found within the Library module of TRICS®.

Population within 500m Range:
All Surveys Included

Population within 1 mile:

1,000 or Less	1 days
1,001 to 5,000	2 days
15,001 to 20,000	1 days
20,001 to 25,000	1 days

This data displays the number of selected surveys within stated 1-mile radii of population.

Population within 5 miles:

5,001 to 25,000	1 days
25,001 to 50,000	1 days
50,001 to 75,000	1 days
100,001 to 125,000	1 days
125,001 to 250,000	1 days

This data displays the number of selected surveys within stated 5-mile radii of population.

Car ownership within 5 miles:

0.6 to 1.0	2 days
1.1 to 1.5	3 days

This data displays the number of selected surveys within stated ranges of average cars owned per residential dwelling, within a radius of 5-miles of selected survey sites.

Travel Plan:

No	5 days

This data displays the number of surveys within the selected set that were undertaken at sites with Travel Plans in place, and the number of surveys that were undertaken at sites without Travel Plans.

PTAL Rating:

No PTAL Present	5 days

This data displays the number of selected surveys with PTAL Ratings.

Covid-19 Restrictions	Yes	At least one survey within the selected data set was undertaken at a time of Covid-19 restrictions

LIST OF SITES relevant to selection parameters

1	**NM-06-J-01**	**BEWICHED COFFEE**		**WEST NORTHAMPTONSHIRE**
	DARNELL WAY			
	NORTHAMPTON			
	Edge of Town			
	Industrial Zone			
	Total Gross floor area:		140 sqm	
	Survey date: FRIDAY		*15/10/21*	*Survey Type: MANUAL*
2	**NN-06-J-01**	**STARBUCKS**		**NORTH NORTHAMPTONSHIRE**
	CORBY ROAD			
	CORBY			
	WELDON			
	Suburban Area (PPS6 Out of Centre)			
	Industrial Zone			
	Total Gross floor area:		236 sqm	
	Survey date: FRIDAY		*23/10/20*	*Survey Type: MANUAL*
3	**PK-06-J-01**	**STARBUCKS**		**PERTH & KINROSS**
	THE TRIANGLE			
	PERTH			
	INVERALMOND			
	Edge of Town			
	Industrial Zone			
	Total Gross floor area:		219 sqm	
	Survey date: WEDNESDAY		*20/04/22*	*Survey Type: MANUAL*
4	**SF-06-J-01**	**COSTA COFFEE**		**SUFFOLK**
	THORNEY WAY			
	STOWMARKET			
	Edge of Town			
	No Sub Category			
	Total Gross floor area:		200 sqm	
	Survey date: FRIDAY		*25/09/20*	*Survey Type: MANUAL*
5	**WO-06-J-01**	**STARBUCKS**		**WORCESTERSHIRE**
	STOURPORT ROAD			
	KIDDERMINSTER			
	Suburban Area (PPS6 Out of Centre)			
	Residential Zone			
	Total Gross floor area:		240 sqm	
	Survey date: FRIDAY		*09/10/20*	*Survey Type: MANUAL*

This section provides a list of all survey sites and days in the selected set. For each individual survey site, it displays a unique site reference code and site address, the selected trip rate calculation parameter and its value, the day of the week and date of each survey, and whether the survey was a manual classified count or an ATC count.

TRIP RATE for Land Use 06 - HOTEL, FOOD & DRINK/J - DRIVE THROUGH COFFEE SHOP

TOTAL VEHICLES

Calculation factor: 100 sqm

BOLD print indicates peak (busiest) period

	ARRIVALS			DEPARTURES			TOTALS		
Time Range	No. Days	Ave. GFA	Trip Rate	No. Days	Ave. GFA	Trip Rate	No. Days	Ave. GFA	Trip Rate
00:00 - 01:00									
01:00 - 02:00									
02:00 - 03:00									
03:00 - 04:00									
04:00 - 05:00									
05:00 - 06:00	3	192	0.694	3	192	0.000	3	192	0.694
06:00 - 07:00	4	199	4.654	4	199	3.648	4	199	8.302
07:00 - 08:00	5	207	15.556	5	207	14.300	5	207	29.856
08:00 - 09:00	5	207	20.966	**5**	**207**	**19.324**	5	207	40.290
09:00 - 10:00	**5**	**207**	**21.546**	5	207	19.324	**5**	**207**	**40.870**
10:00 - 11:00	5	207	16.812	5	207	17.681	5	207	34.493
11:00 - 12:00	5	207	16.425	5	207	17.101	5	207	33.526
12:00 - 13:00	5	207	19.614	5	207	18.841	5	207	38.455
13:00 - 14:00	5	207	18.357	5	207	18.744	5	207	37.101
14:00 - 15:00	5	207	13.043	5	207	13.816	5	207	26.859
15:00 - 16:00	5	207	13.237	5	207	12.367	5	207	25.604
16:00 - 17:00	5	207	12.657	5	207	14.300	5	207	26.957
17:00 - 18:00	5	207	10.435	5	207	12.367	5	207	22.802
18:00 - 19:00	5	207	6.184	5	207	7.150	5	207	13.334
19:00 - 20:00	4	199	5.157	4	199	4.654	4	199	9.811
20:00 - 21:00	4	199	2.138	4	199	3.396	4	199	5.534
21:00 - 22:00	2	180	1.950	2	180	2.507	2	180	4.457
22:00 - 23:00									
23:00 - 24:00									
Total Rates:			199.425			199.520			398.945

This section displays the trip rate results based on the selected set of surveys and the selected count type (shown just above the table). It is split by three main columns, representing arrivals trips, departures trips, and total trips (arrivals plus departures). Within each of these main columns are three sub-columns. These display the number of survey days where count data is included (per time period), the average value of the selected trip rate calculation parameter (per time period), and the trip rate result (per time period). Total trip rates (the sum of the column) are also displayed at the foot of the table.

*To obtain a trip rate, the average (mean) trip rate parameter value (TRP) is first calculated for all selected survey days that have count data available for the stated time period. The average (mean) number of arrivals, departures or totals (whichever applies) is also calculated (COUNT) for all selected survey days that have count data available for the stated time period. Then, the average count is divided by the average trip rate parameter value, and multiplied by the stated calculation factor (shown just above the table and abbreviated here as FACT). So, the method is: COUNT/TRP*FACT. Trip rates are then rounded to 3 decimal places.*

The survey data, graphs and all associated supporting information, contained within the TRICS Database are published by TRICS Consortium Limited ("the Company") and the Company claims copyright and database rights in this published work. The Company authorises those who possess a current TRICS licence to access the TRICS Database and copy the data contained within the TRICS Database for the licence holders' use only. Any resulting copy must retain all copyrights and other proprietary notices, and any disclaimer contained thereon.

The Company accepts no responsibility for loss which may arise from reliance on data contained in the TRICS Database. [No warranty of any kind, express or implied, is made as to the data contained in the TRICS Database.]

Parameter summary

Trip rate parameter range selected:	140 - 240 (units: sqm)
Survey date date range:	01/01/15 - 15/05/22
Number of weekdays (Monday-Friday):	5
Number of Saturdays:	0
Number of Sundays:	0
Surveys automatically removed from selection:	0
Surveys manually removed from selection:	0

This section displays a quick summary of some of the data filtering selections made by the TRICS® user. The trip rate calculation parameter range of all selected surveys is displayed first, followed by the range of minimum and maximum survey dates selected by the user. Then, the total number of selected weekdays and weekend days in the selected set of surveys are show. Finally, the number of survey days that have been manually removed from the selected set outside of the standard filtering procedure are displayed.

Calculation Reference: AUDIT-262601-230412-0430

TRIP RATE CALCULATION SELECTION PARAMETERS:

Land Use : 06 - HOTEL, FOOD & DRINK
Category : D - FAST FOOD - DRIVE THROUGH

TOTAL VEHICLES

Selected regions and areas:

03	**SOUTH WEST**		
	NS	NORTH SOMERSET	1 days
04	**EAST ANGLIA**		
	CA	CAMBRIDGESHIRE	1 days
06	**WEST MIDLANDS**		
	WM	WEST MIDLANDS	1 days
	WO	WORCESTERSHIRE	1 days
08	**NORTH WEST**		
	MS	MERSEYSIDE	1 days

This section displays the number of survey days per TRICS® sub-region in the selected set

Primary Filtering selection:

This data displays the chosen trip rate parameter and its selected range. Only sites that fall within the parameter range are included in the trip rate calculation.

Parameter: Gross floor area
Actual Range: 230 to 463 (units: sqm)
Range Selected by User: 182 to 800 (units: sqm)

Parking Spaces Range: All Surveys Included

Public Transport Provision:
Selection by: Include all surveys

Date Range: 01/01/15 to 15/09/22

This data displays the range of survey dates selected. Only surveys that were conducted within this date range are included in the trip rate calculation.

Selected survey days:

Tuesday	1 days
Thursday	1 days
Friday	3 days

This data displays the number of selected surveys by day of the week.

Selected survey types:

Manual count	5 days
Directional ATC Count	0 days

This data displays the number of manual classified surveys and the number of unclassified ATC surveys, the total adding up to the overall number of surveys in the selected set. Manual surveys are undertaken using staff, whilst ATC surveys are undertaking using machines.

Selected Locations:

Suburban Area (PPS6 Out of Centre)	4
Neighbourhood Centre (PPS6 Local Centre)	1

This data displays the number of surveys per main location category within the selected set. The main location categories consist of Free Standing, Edge of Town, Suburban Area, Neighbourhood Centre, Edge of Town Centre, Town Centre and Not Known.

Selected Location Sub Categories:

Residential Zone	1
No Sub Category	4

This data displays the number of surveys per location sub-category within the selected set. The location sub-categories consist of Commercial Zone, Industrial Zone, Development Zone, Residential Zone, Retail Zone, Built-Up Zone, Village, Out of Town, High Street and No Sub Category.

Inclusion of Servicing Vehicles Counts:

Servicing vehicles Included	X days - Selected
Servicing vehicles Excluded	5 days - Selected

Secondary Filtering selection:

Use Class:

Not Known	5 days

This data displays the number of surveys per Use Class classification within the selected set. The Use Classes Order (England) 2020 has been used for this purpose, which can be found within the Library module of TRICS®.

Population within 500m Range:
All Surveys Included

Population within 1 mile:

15,001 to 20,000	3 days
25,001 to 50,000	2 days

This data displays the number of selected surveys within stated 1-mile radii of population.

Population within 5 miles:

75,001 to 100,000	1 days
100,001 to 125,000	1 days
125,001 to 250,000	1 days
250,001 to 500,000	2 days

This data displays the number of selected surveys within stated 5-mile radii of population.

Car ownership within 5 miles:

0.6 to 1.0	4 days
1.1 to 1.5	1 days

This data displays the number of selected surveys within stated ranges of average cars owned per residential dwelling, within a radius of 5-miles of selected survey sites.

Travel Plan:

No	5 days

This data displays the number of surveys within the selected set that were undertaken at sites with Travel Plans in place, and the number of surveys that were undertaken at sites without Travel Plans.

PTAL Rating:

No PTAL Present	5 days

This data displays the number of selected surveys with PTAL Ratings.

Covid-19 Restrictions	Yes	At least one survey within the selected data set was undertaken at a time of Covid-19 restrictions

LIST OF SITES relevant to selection parameters

1 CA-06-D-02 MCDONALD'S CAMBRIDGESHIRE
NEWMARKET ROAD
CAMBRIDGE

Suburban Area (PPS6 Out of Centre)
Residential Zone
Total Gross floor area: 435 sqm
Survey date: TUESDAY 19/09/17 Survey Type: MANUAL

2 MS-06-D-01 MCDONALD'S MERSEYSIDE
SAINT HELENS LINKWAY
SAINT HELENS

Suburban Area (PPS6 Out of Centre)
No Sub Category
Total Gross floor area: 463 sqm
Survey date: FRIDAY 16/04/21 Survey Type: MANUAL

3 NS-06-D-01 KFC NORTH SOMERSET
MARCHFIELDS WAY
WESTON-SUPER-MARE

Suburban Area (PPS6 Out of Centre)
No Sub Category
Total Gross floor area: 230 sqm
Survey date: THURSDAY 15/09/22 Survey Type: MANUAL

4 WM-06-D-03 KFC WEST MIDLANDS
COVENTRY ROAD
BIRMINGHAM
SHELDON
Neighbourhood Centre (PPS6 Local Centre)
No Sub Category
Total Gross floor area: 418 sqm
Survey date: FRIDAY 26/11/21 Survey Type: MANUAL

5 WO-06-D-01 KFC WORCESTERSHIRE
CLEWS ROAD
REDDITCH

Suburban Area (PPS6 Out of Centre)
No Sub Category
Total Gross floor area: 436 sqm
Survey date: FRIDAY 02/10/20 Survey Type: MANUAL

This section provides a list of all survey sites and days in the selected set. For each individual survey site, it displays a unique site reference code and site address, the selected trip rate calculation parameter and its value, the day of the week and date of each survey, and whether the survey was a manual classified count or an ATC count.

TRIP RATE for Land Use 06 - HOTEL, FOOD & DRINK/D - FAST FOOD - DRIVE THROUGH

TOTAL VEHICLES

Calculation factor: 100 sqm

BOLD print indicates peak (busiest) period

	ARRIVALS			DEPARTURES			TOTALS		
Time Range	No. Days	Ave. GFA	Trip Rate	No. Days	Ave. GFA	Trip Rate	No. Days	Ave. GFA	Trip Rate
00:00 - 01:00									
01:00 - 02:00									
02:00 - 03:00									
03:00 - 04:00									
04:00 - 05:00									
05:00 - 06:00									
06:00 - 07:00	2	347	5.916	2	347	5.483	2	347	11.399
07:00 - 08:00	3	376	8.599	3	376	7.535	3	376	16.134
08:00 - 09:00	3	376	9.574	3	376	9.663	3	376	19.237
09:00 - 10:00	3	376	9.663	3	376	9.663	3	376	19.326
10:00 - 11:00	5	396	5.903	5	396	5.096	5	396	10.999
11:00 - 12:00	5	396	8.174	5	396	7.518	5	396	15.692
12:00 - 13:00	5	396	11.907	5	396	11.302	5	396	23.209
13:00 - 14:00	5	396	9.990	5	396	10.999	5	396	20.989
14:00 - 15:00	5	396	7.568	5	396	8.123	5	396	15.691
15:00 - 16:00	5	396	9.637	5	396	9.586	5	396	19.223
16:00 - 17:00	5	396	10.343	5	396	9.839	5	396	20.182
17:00 - 18:00	5	396	11.907	5	396	12.260	5	396	24.167
18:00 - 19:00	**5**	**396**	**12.210**	**5**	**396**	**12.361**	**5**	**396**	**24.571**
19:00 - 20:00	5	396	9.586	5	396	10.343	5	396	19.929
20:00 - 21:00	5	396	8.930	5	396	9.233	5	396	18.163
21:00 - 22:00	5	396	6.811	5	396	6.912	5	396	13.723
22:00 - 23:00	3	376	6.909	3	376	7.086	3	376	13.995
23:00 - 24:00	3	376	3.100	3	376	3.632	3	376	6.732
Total Rates:			156.727			156.634			313.361

This section displays the trip rate results based on the selected set of surveys and the selected count type (shown just above the table). It is split by three main columns, representing arrivals trips, departures trips, and total trips (arrivals plus departures). Within each of these main columns are three sub-columns. These display the number of survey days where count data is included (per time period), the average value of the selected trip rate calculation parameter (per time period), and the trip rate result (per time period). Total trip rates (the sum of the column) are also displayed at the foot of the table.

*To obtain a trip rate, the average (mean) trip rate parameter value (TRP) is first calculated for all selected survey days that have count data available for the stated time period. The average (mean) number of arrivals, departures or totals (whichever applies) is also calculated (COUNT) for all selected survey days that have count data available for the stated time period. Then, the average count is divided by the average trip rate parameter value, and multiplied by the stated calculation factor (shown just above the table and abbreviated here as FACT). So, the method is: COUNT/TRP*FACT. Trip rates are then rounded to 3 decimal places.*

The survey data, graphs and all associated supporting information, contained within the TRICS Database are published by TRICS Consortium Limited ("the Company") and the Company claims copyright and database rights in this published work. The Company authorises those who possess a current TRICS licence to access the TRICS Database and copy the data contained within the TRICS Database for the licence holders' use only. Any resulting copy must retain all copyrights and other proprietary notices, and any disclaimer contained thereon.

The Company accepts no responsibility for loss which may arise from reliance on data contained in the TRICS Database. [No warranty of any kind, express or implied, is made as to the data contained in the TRICS Database.]

Parameter summary

Trip rate parameter range selected:	230 - 463 (units: sqm)
Survey date date range:	01/01/15 - 15/09/22
Number of weekdays (Monday-Friday):	5
Number of Saturdays:	0
Number of Sundays:	0
Surveys automatically removed from selection:	0
Surveys manually removed from selection:	0

This section displays a quick summary of some of the data filtering selections made by the TRICS® user. The trip rate calculation parameter range of all selected surveys is displayed first, followed by the range of minimum and maximum survey dates selected by the user. Then, the total number of selected weekdays and weekend days in the selected set of surveys are show. Finally, the number of survey days that have been manually removed from the selected set outside of the standard filtering procedure are displayed.

Appendix 5
Traffic Figures

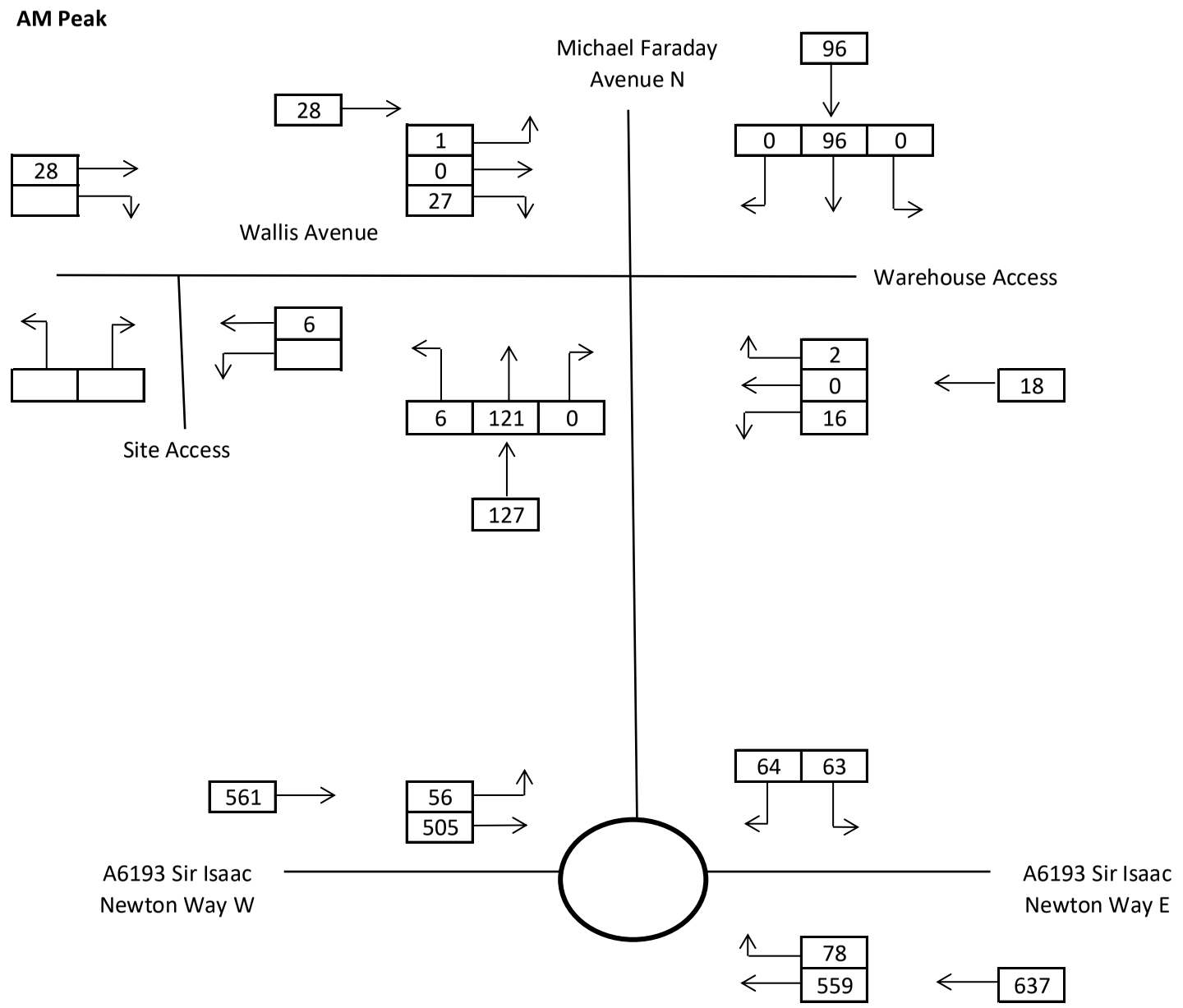

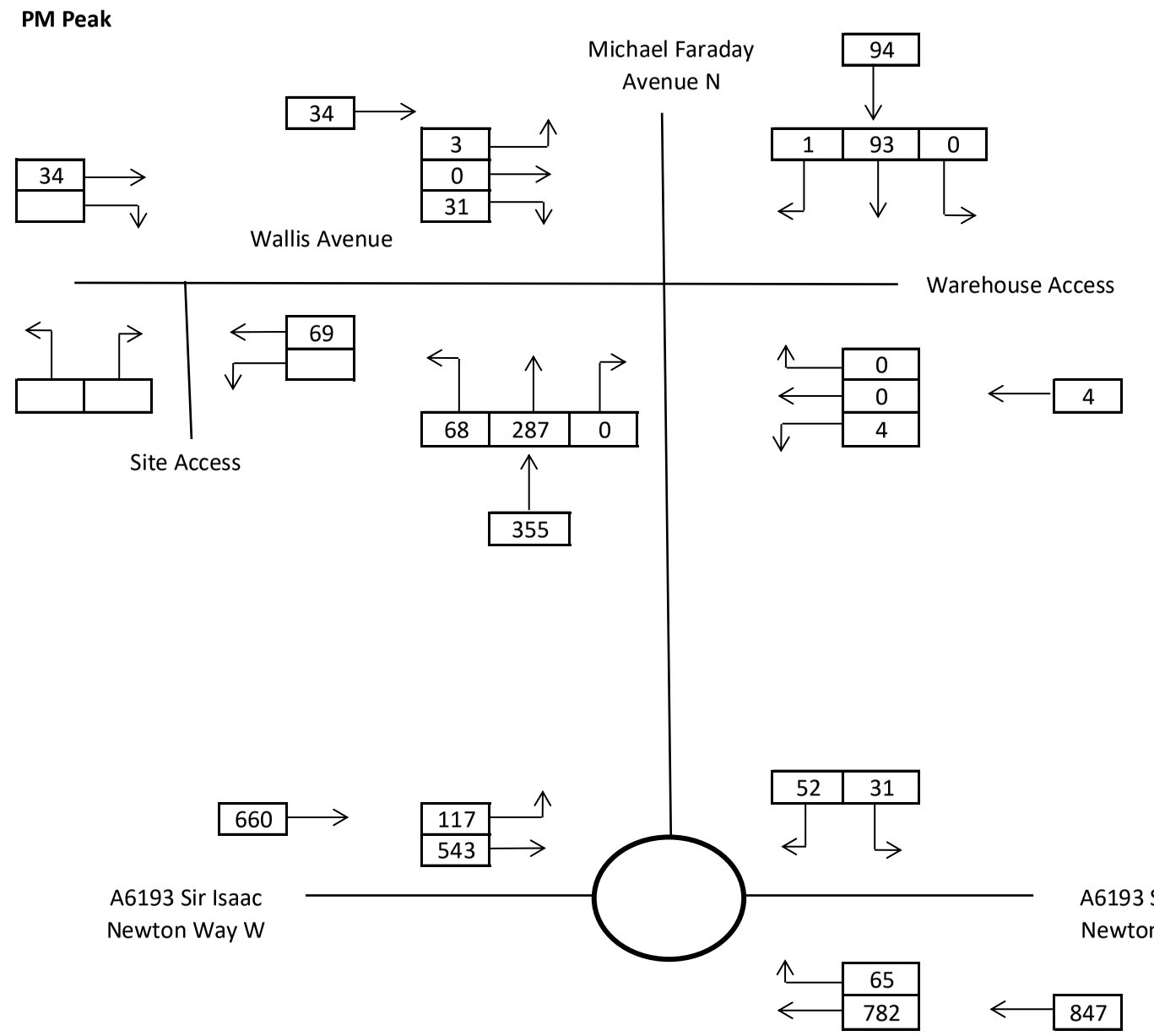

DYNAMIC TRANSPORT PLANNING	Survey Flows 2023	22/09/2023	Job Number: 3705023
	Proposed Mixed-Use Development, A6193, Kingsway Business Park, Rochdale	Traffic Figure 1	

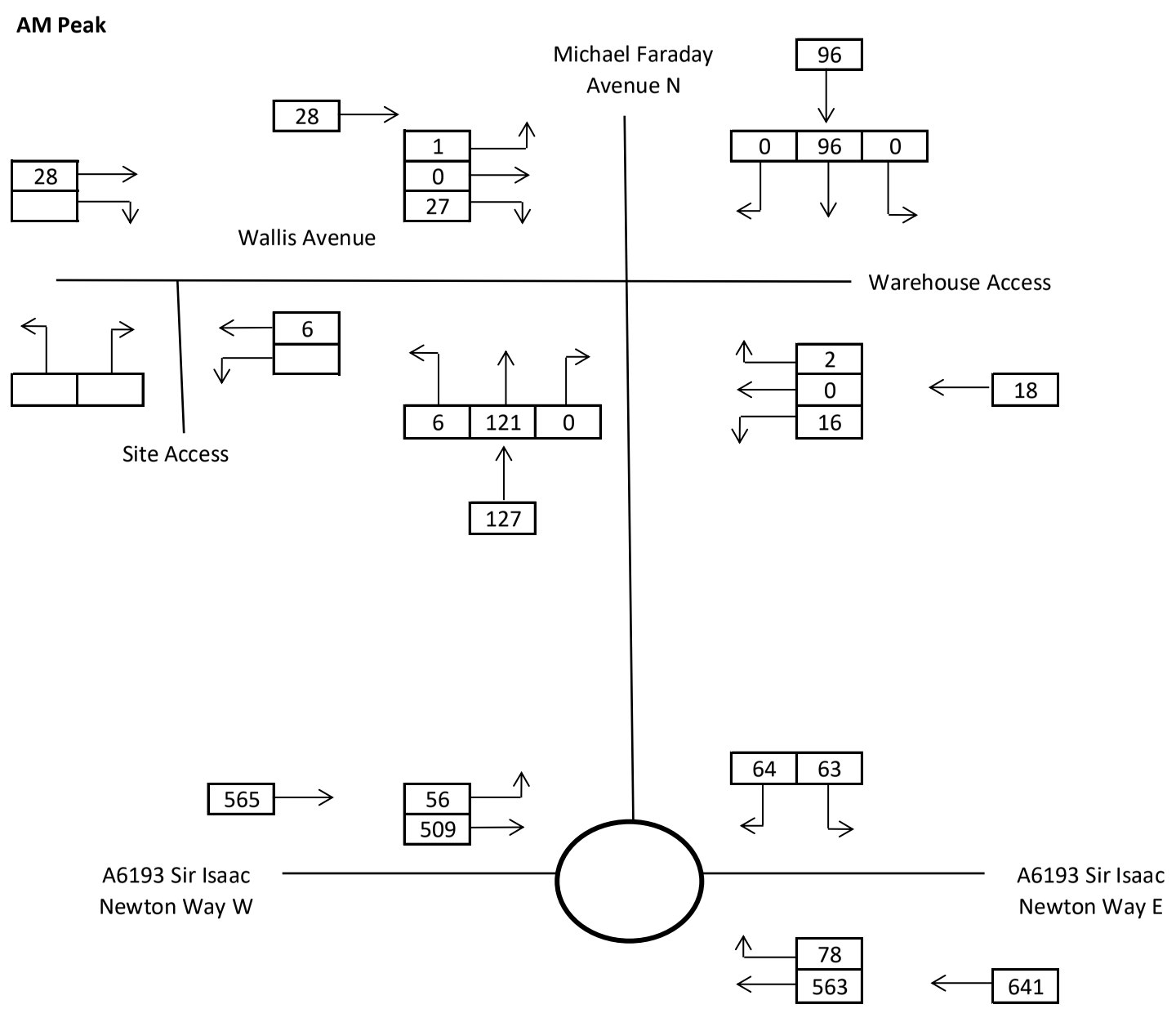

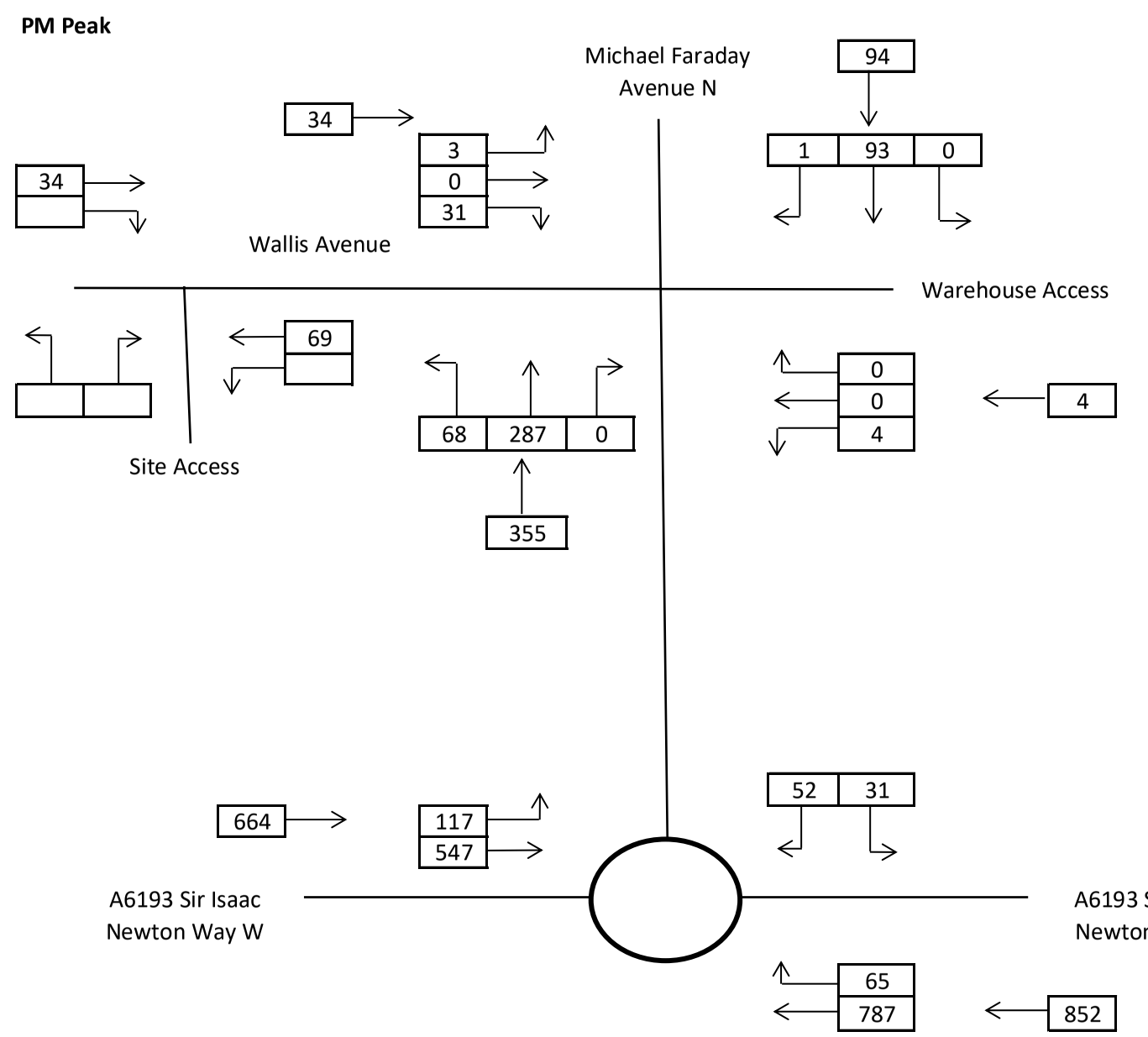

DYNAMIC TRANSPORT PLANNING	Base Flows 2024	22/09/2023	Job Number: 3705023
	Proposed Mixed-Use Development, A6193, Kingsway Business Park, Rochdale	Traffic Figure 2	

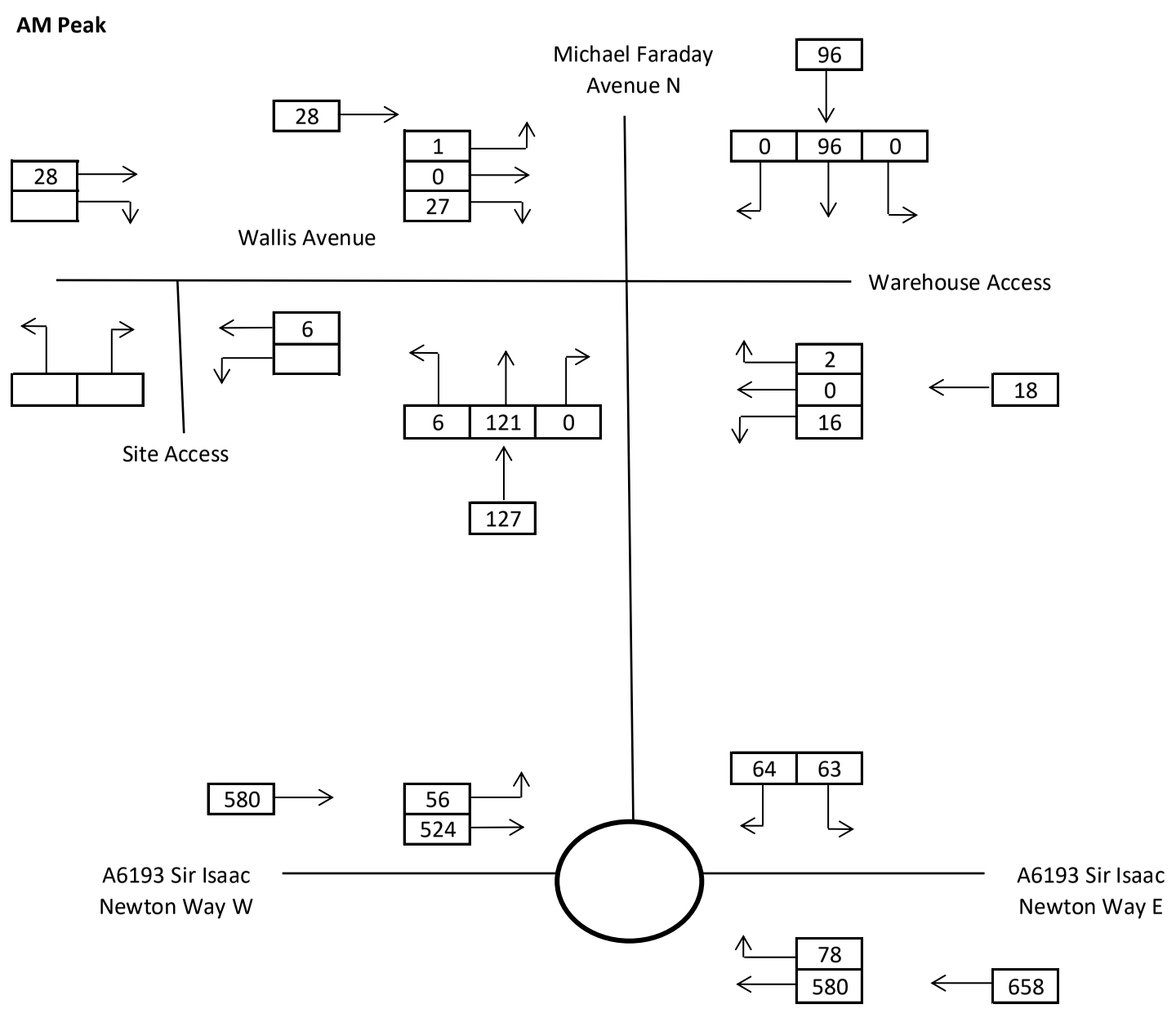

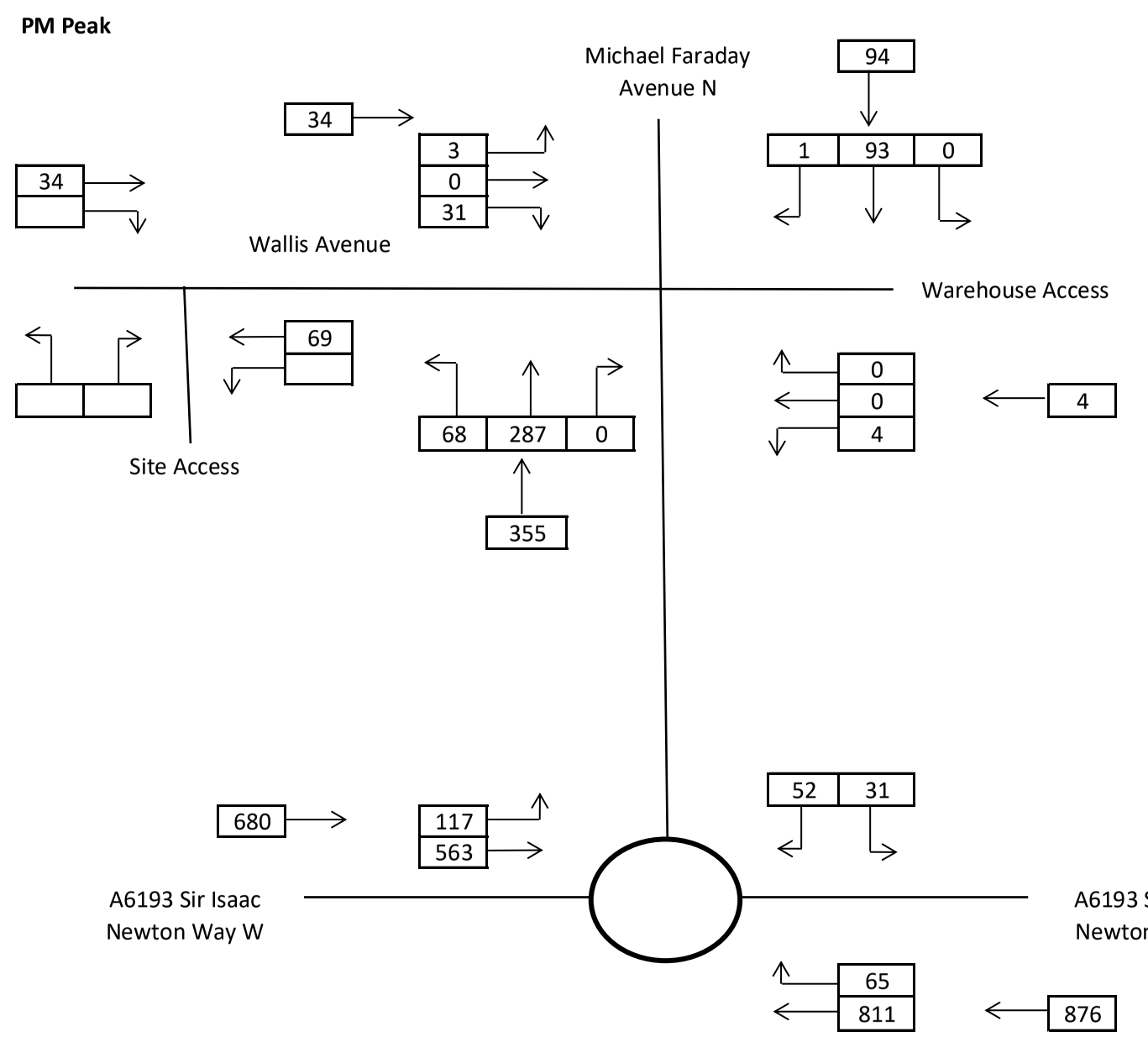

DYNAMIC TRANSPORT PLANNING	Base Flows 2028	22/09/2023	Job Number: 3705023
	Proposed Mixed-Use Development, A6193, Kingsway Business Park, Rochdale	Traffic Figure 3	

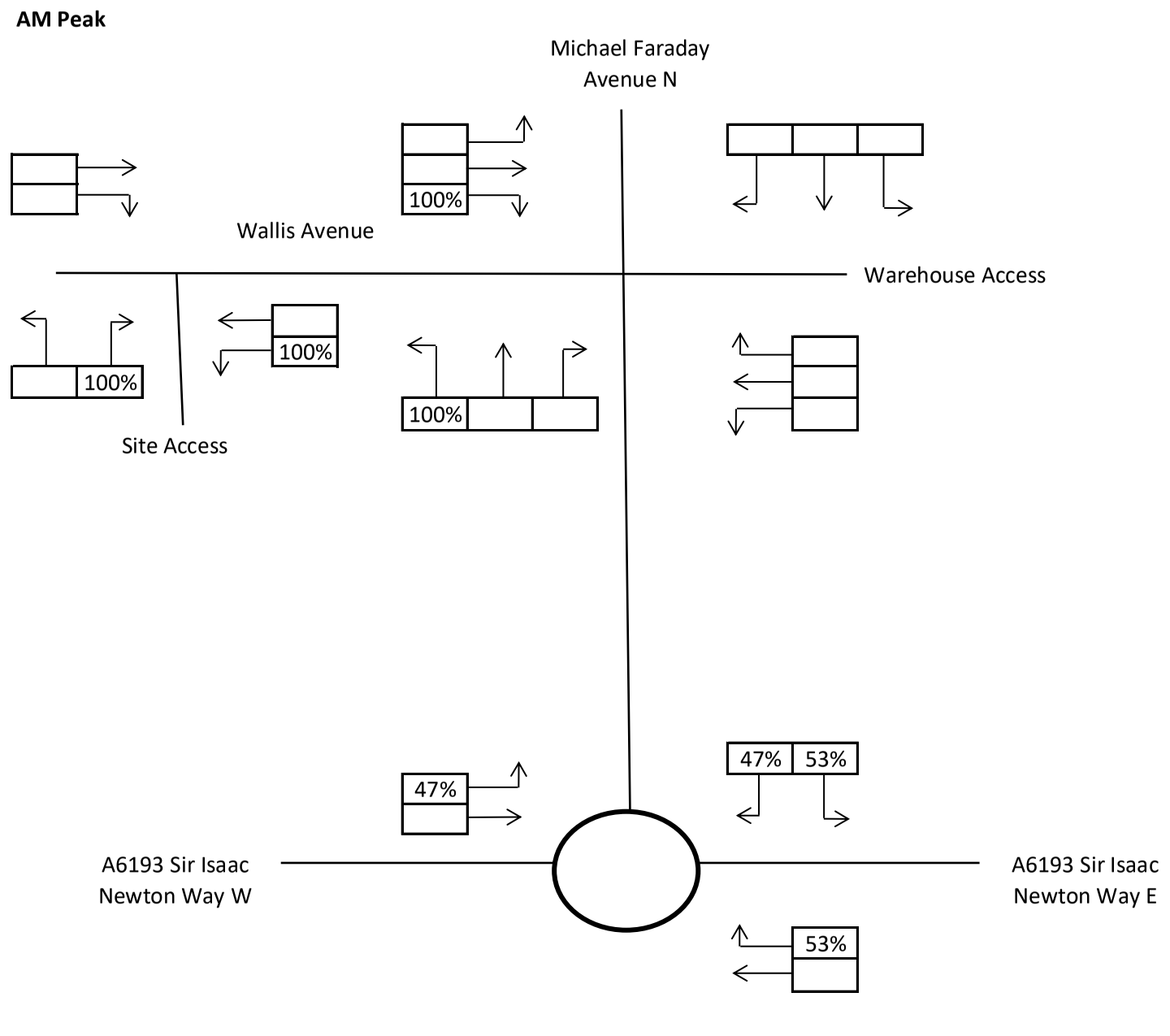

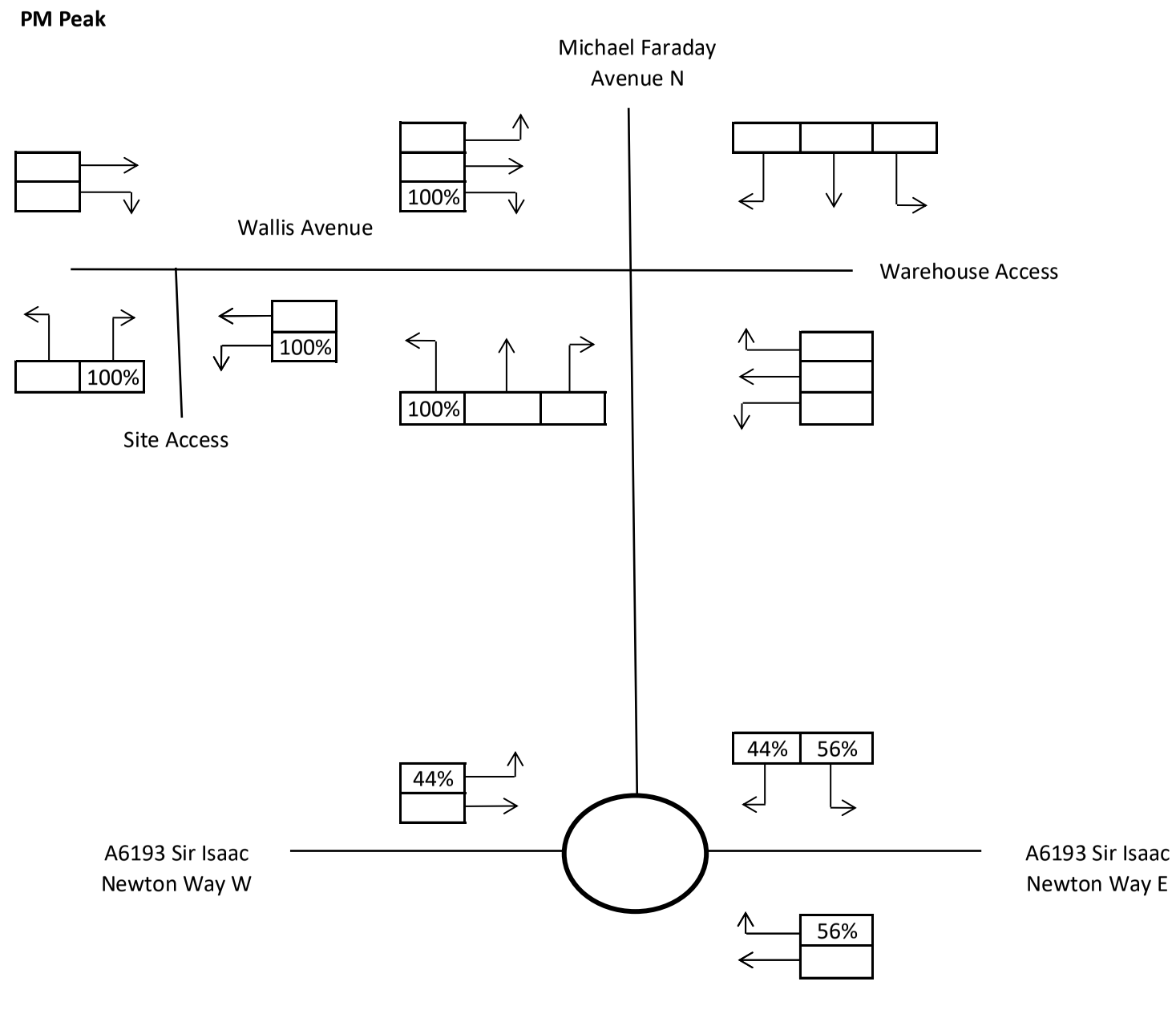

DYNAMIC TRANSPORT PLANNING	New Trip Distribution	22/09/2023	Job Number: 3705023
	Proposed Mixed-Use Development, A6193, Kingsway Business Park, Rochdale	Traffic Figure 4	

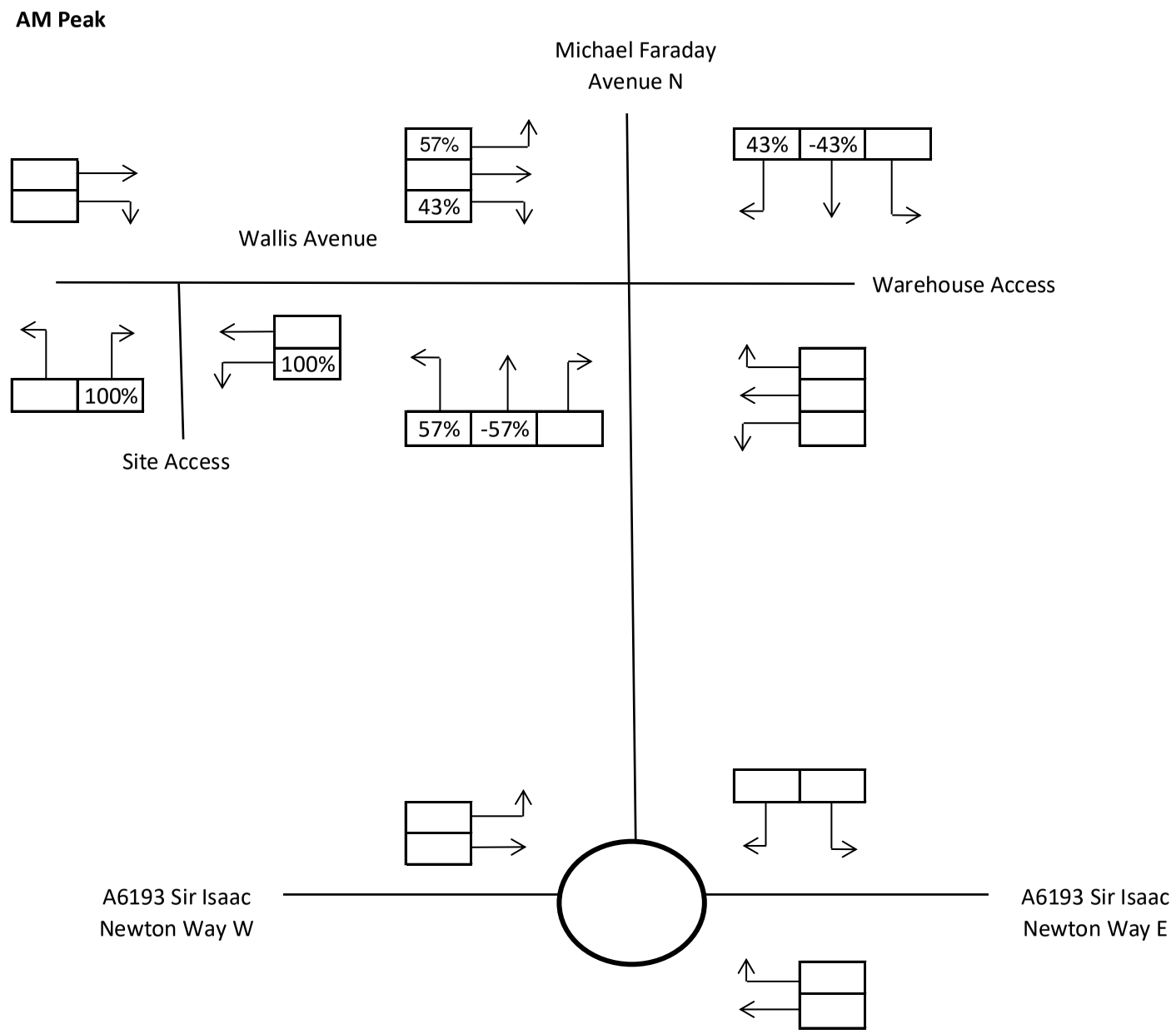

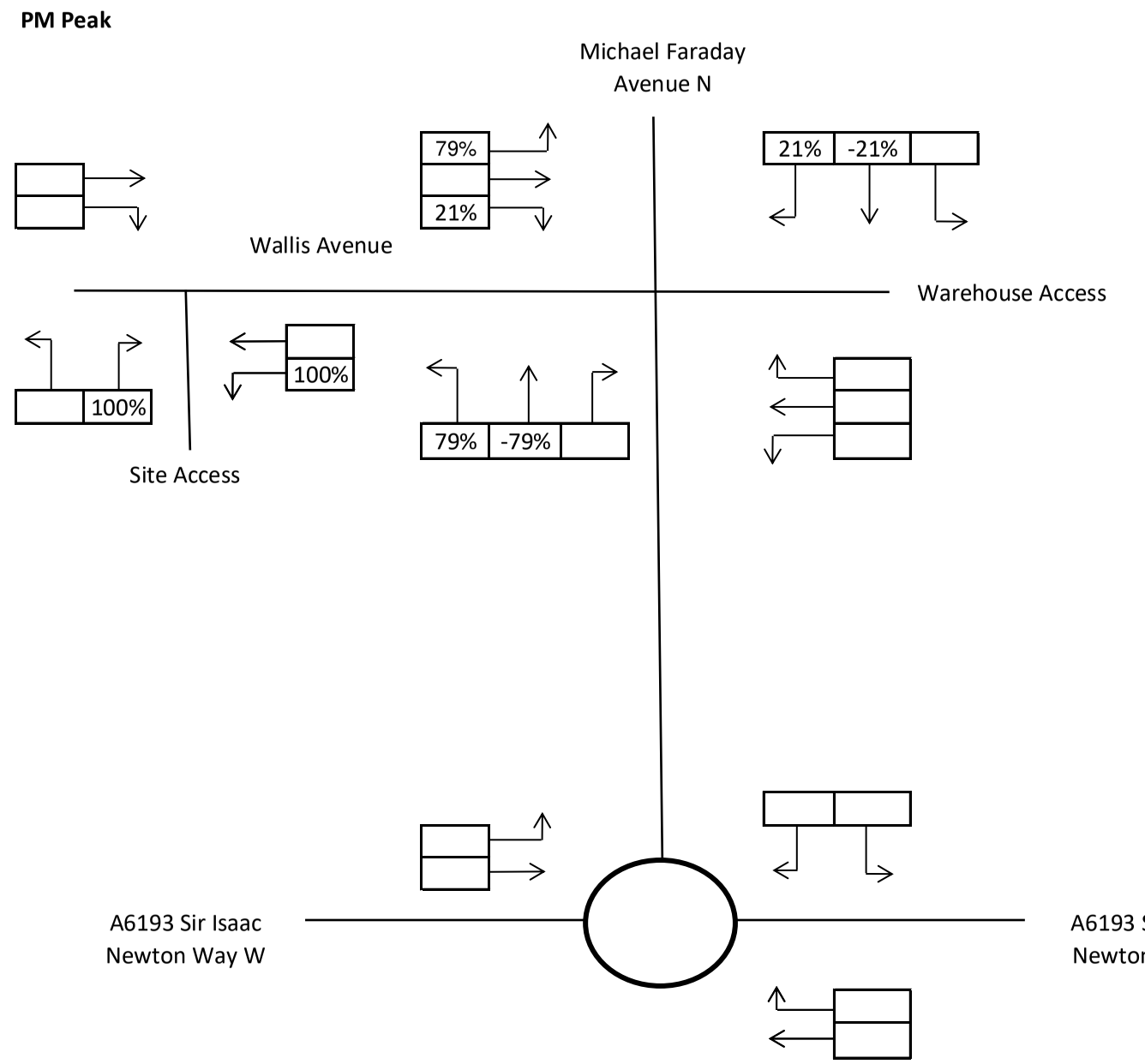

DYNAMIC TRANSPORT PLANNING	Located Diverted Trip Distribution	22/09/2023	Job Number: 3705023
	Proposed Mixed-Use Development, A6193, Kingsway Business Park, Rochdale	Traffic Figure 5	

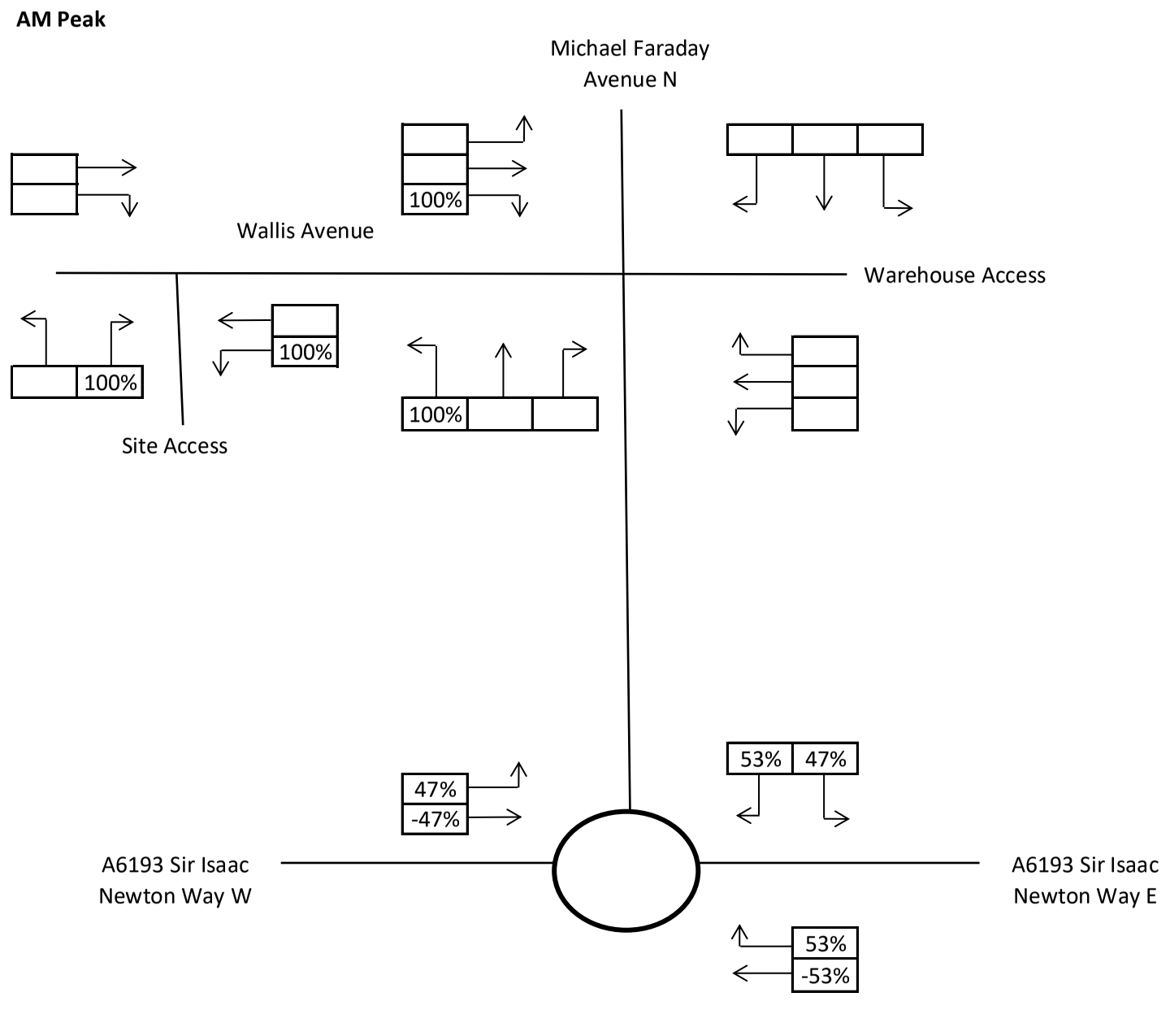

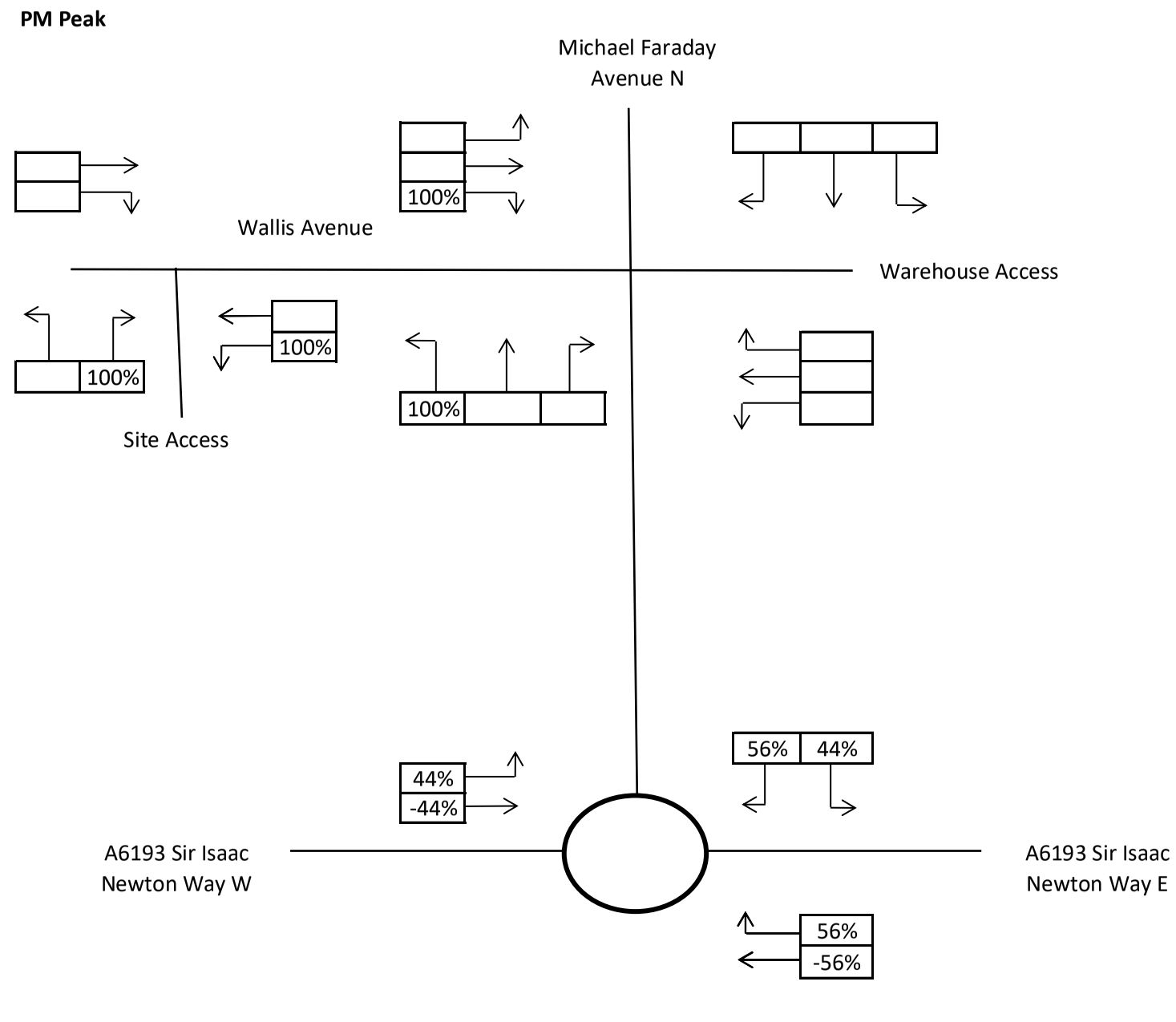

DYNAMIC TRANSPORT PLANNING	Wider Diverted Trip Distribution	22/09/2023	Job Number: 3705023
	Proposed Mixed-Use Development, A6193, Kingsway Business Park, Rochdale	Traffic Figure 6	

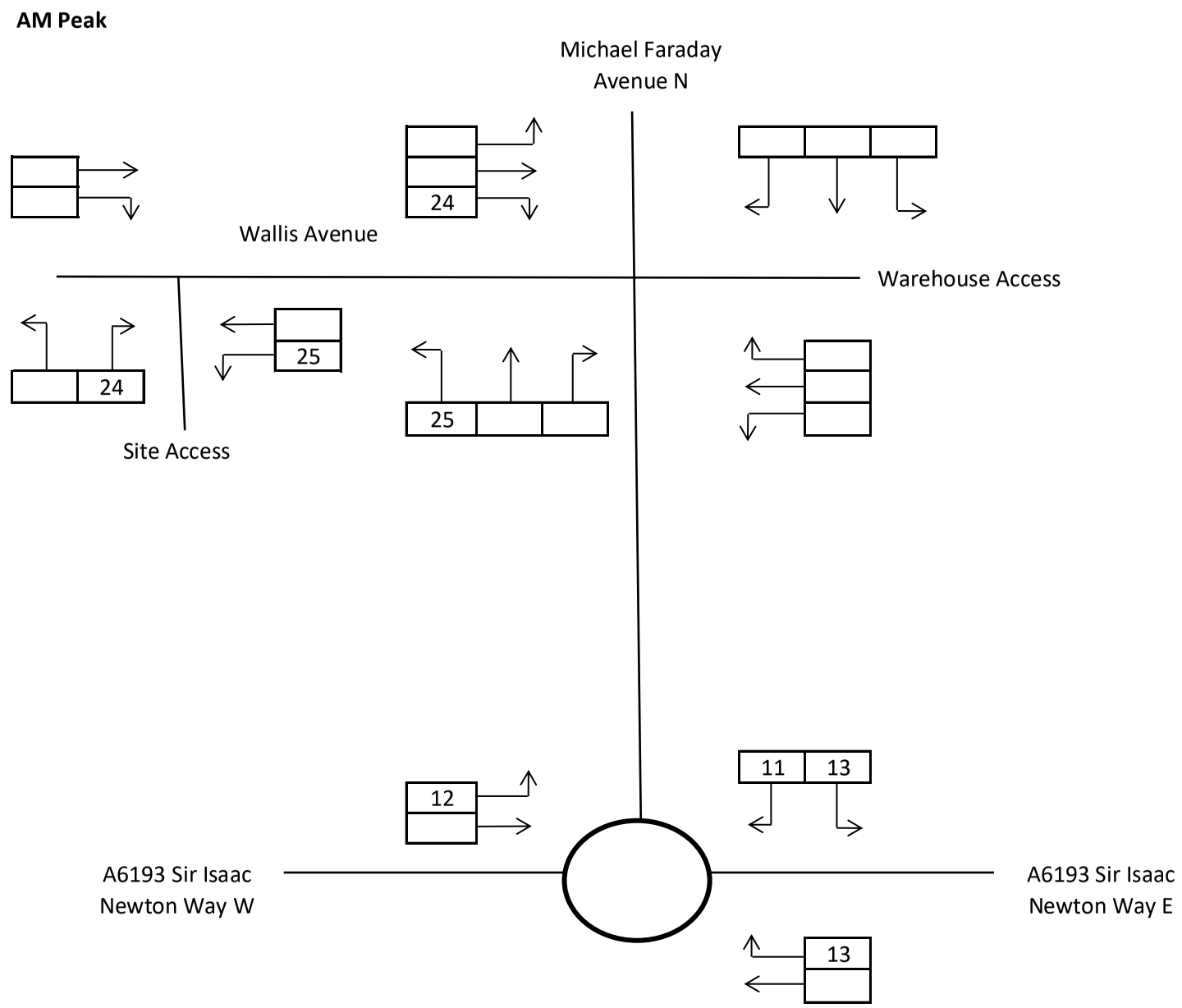

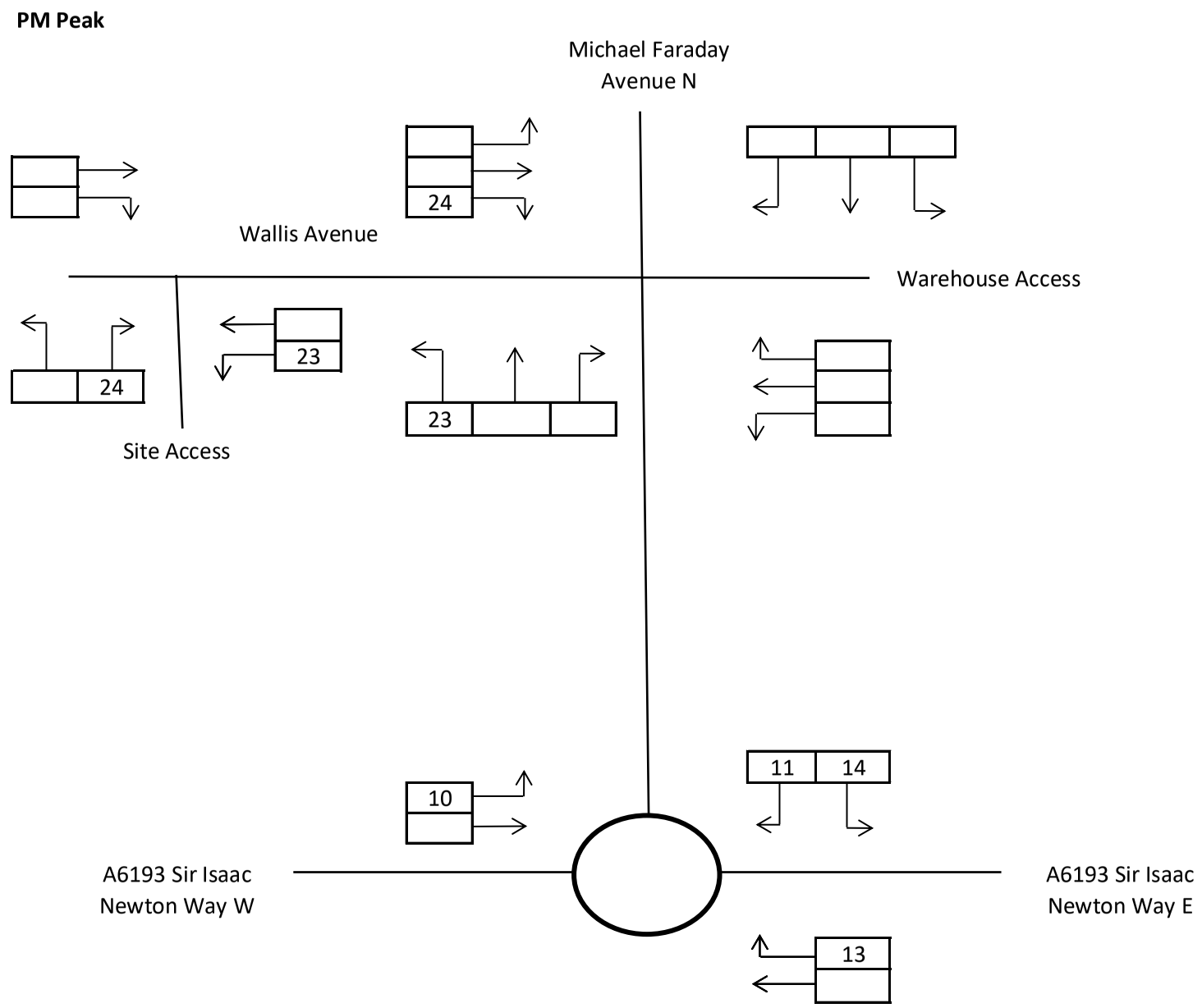

DYNAMIC TRANSPORT PLANNING	New Trip Assignment	22/09/2023	Job Number: 3705023
	Proposed Mixed-Use Development, A6193, Kingsway Business Park, Rochdale	Traffic Figure 7	

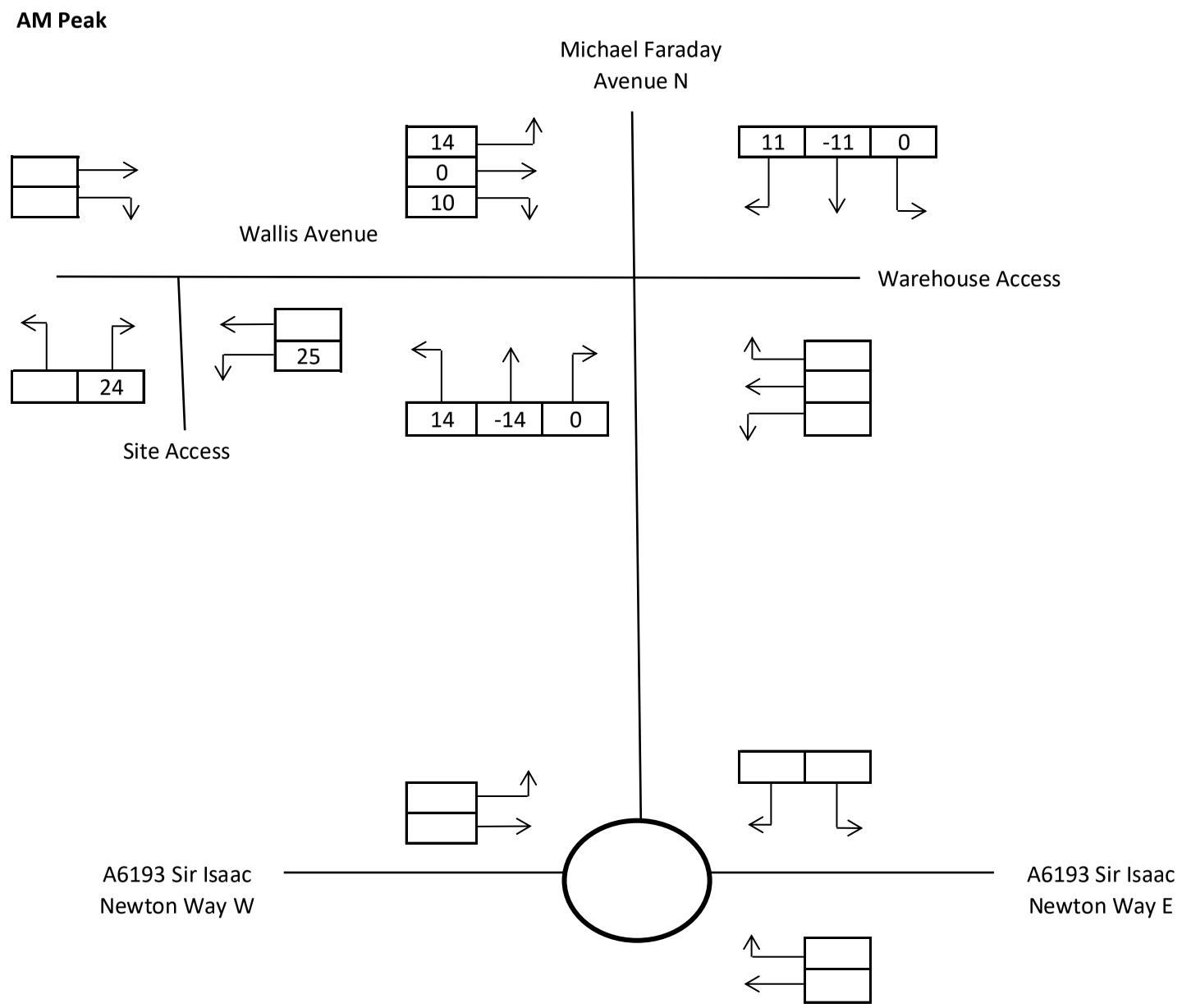

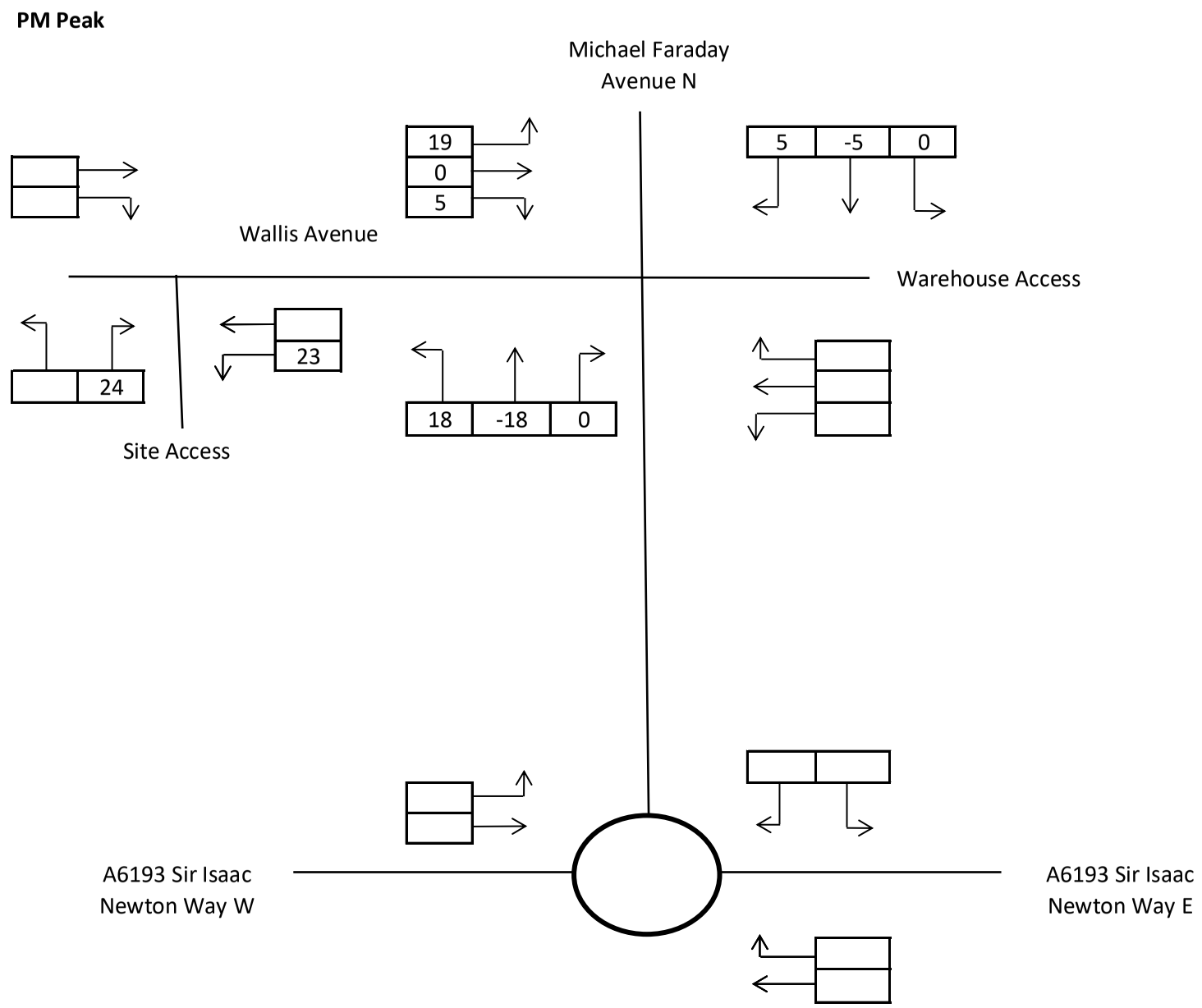

DYNAMIC TRANSPORT PLANNING	Local Duverted Trip Assignment	22/09/2023	Job Number: 3705023
	Proposed Mixed-Use Development, A6193, Kingsway Business Park, Rochdale	Traffic Figure 8	

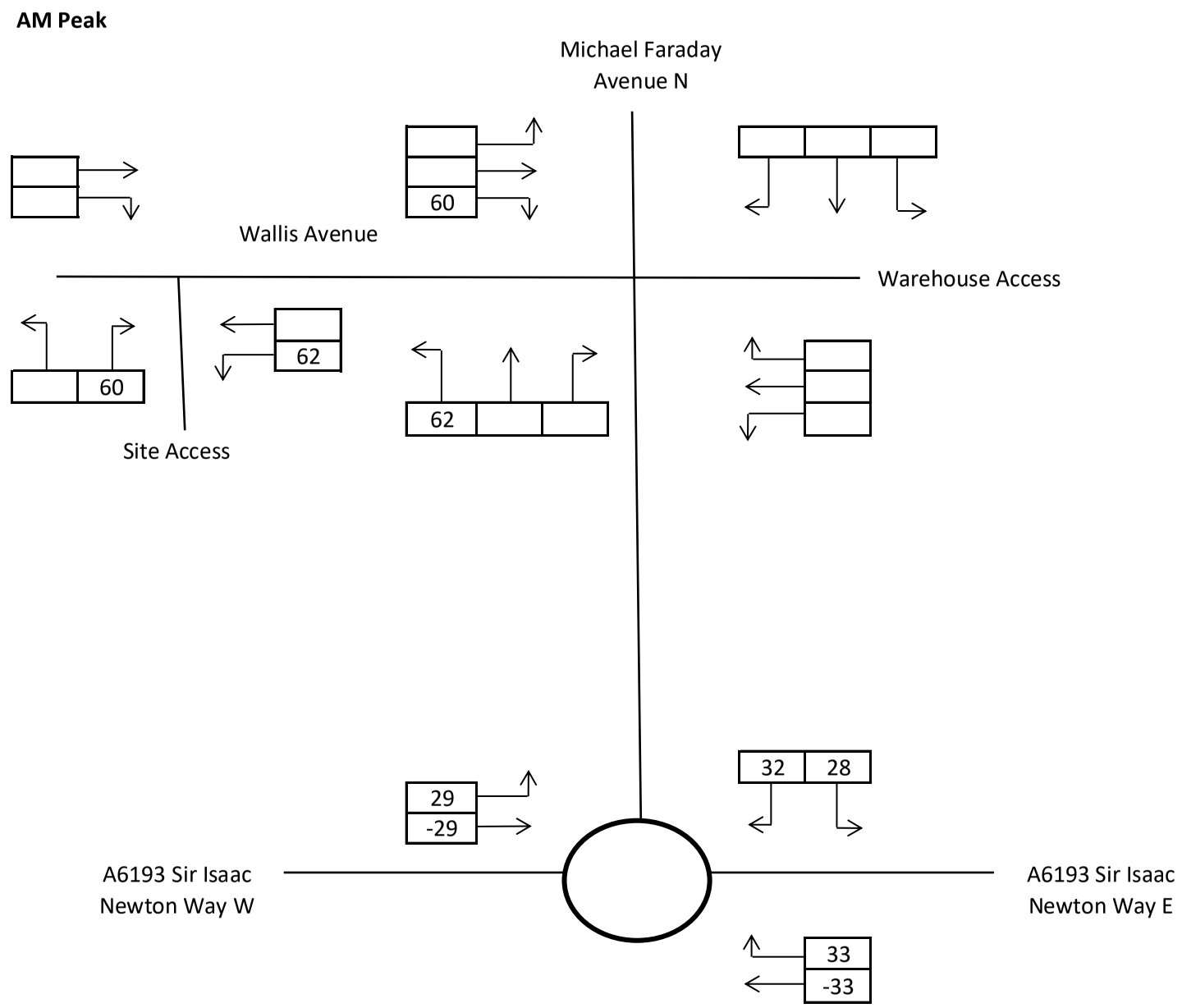

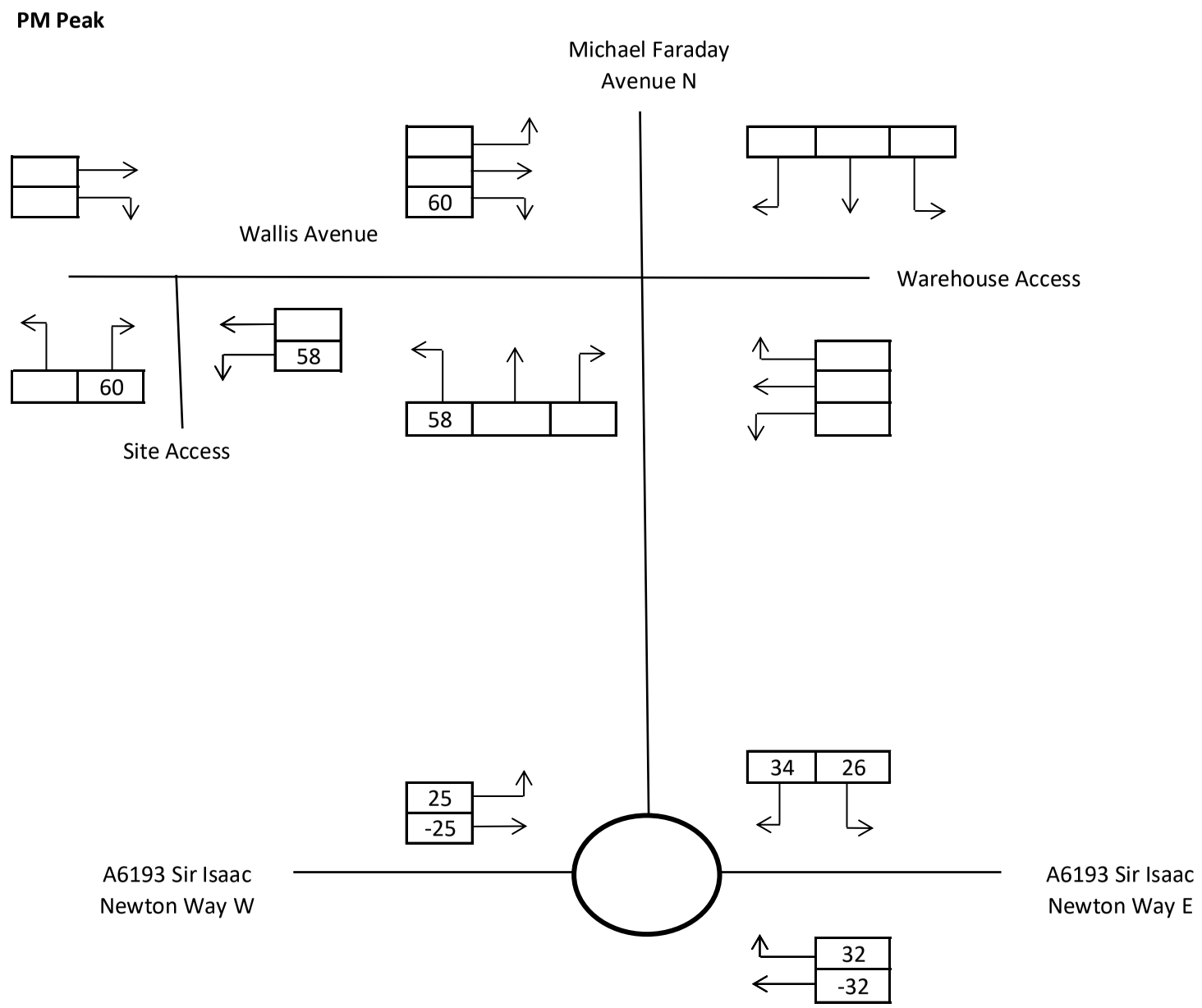

DYNAMIC TRANSPORT PLANNING	Wider Diverted Trip Assignment	22/09/2023	Job Number: 3705023
	Proposed Mixed-Use Development, A6193, Kingsway Business Park, Rochdale	Traffic Figure 9	

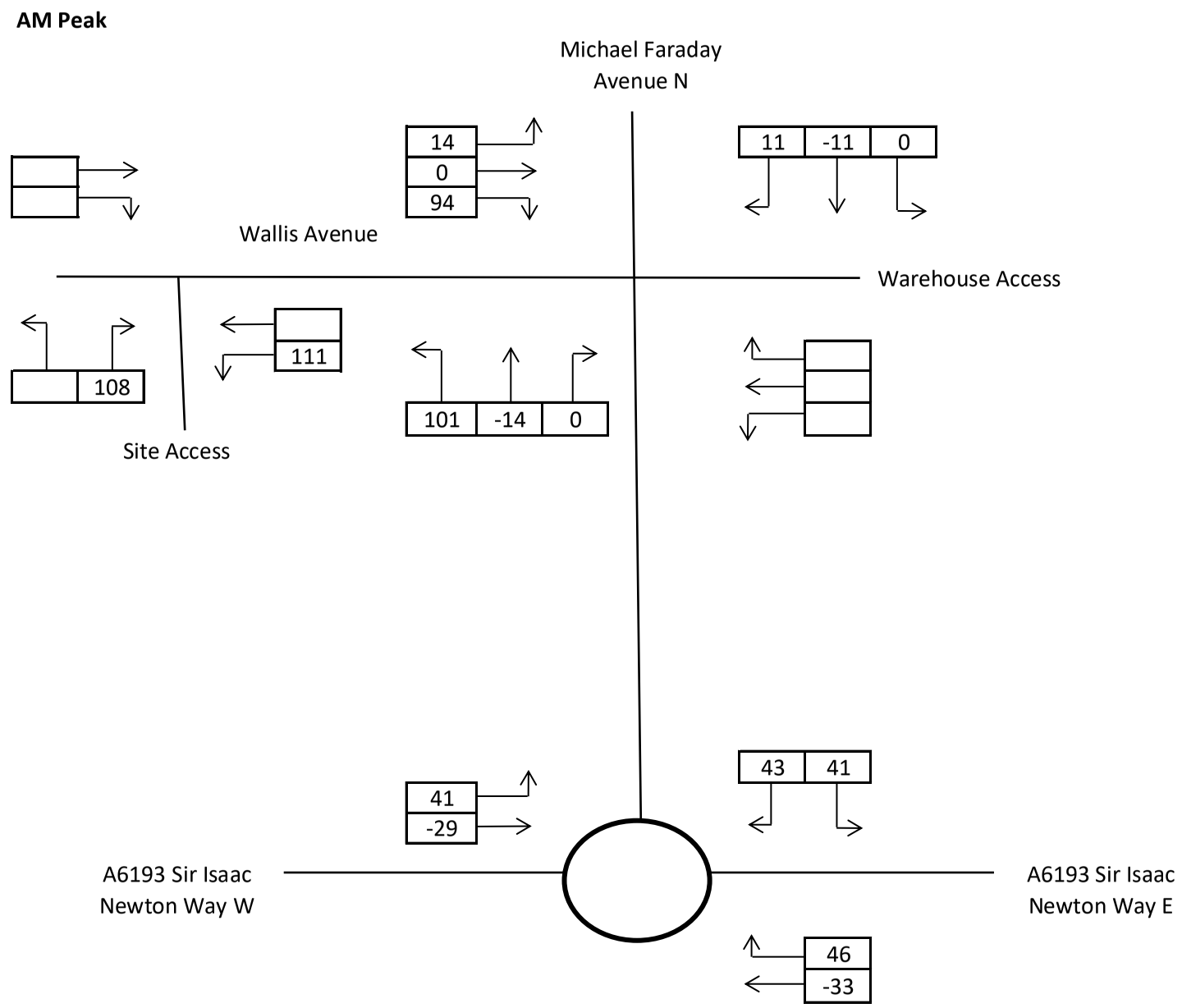

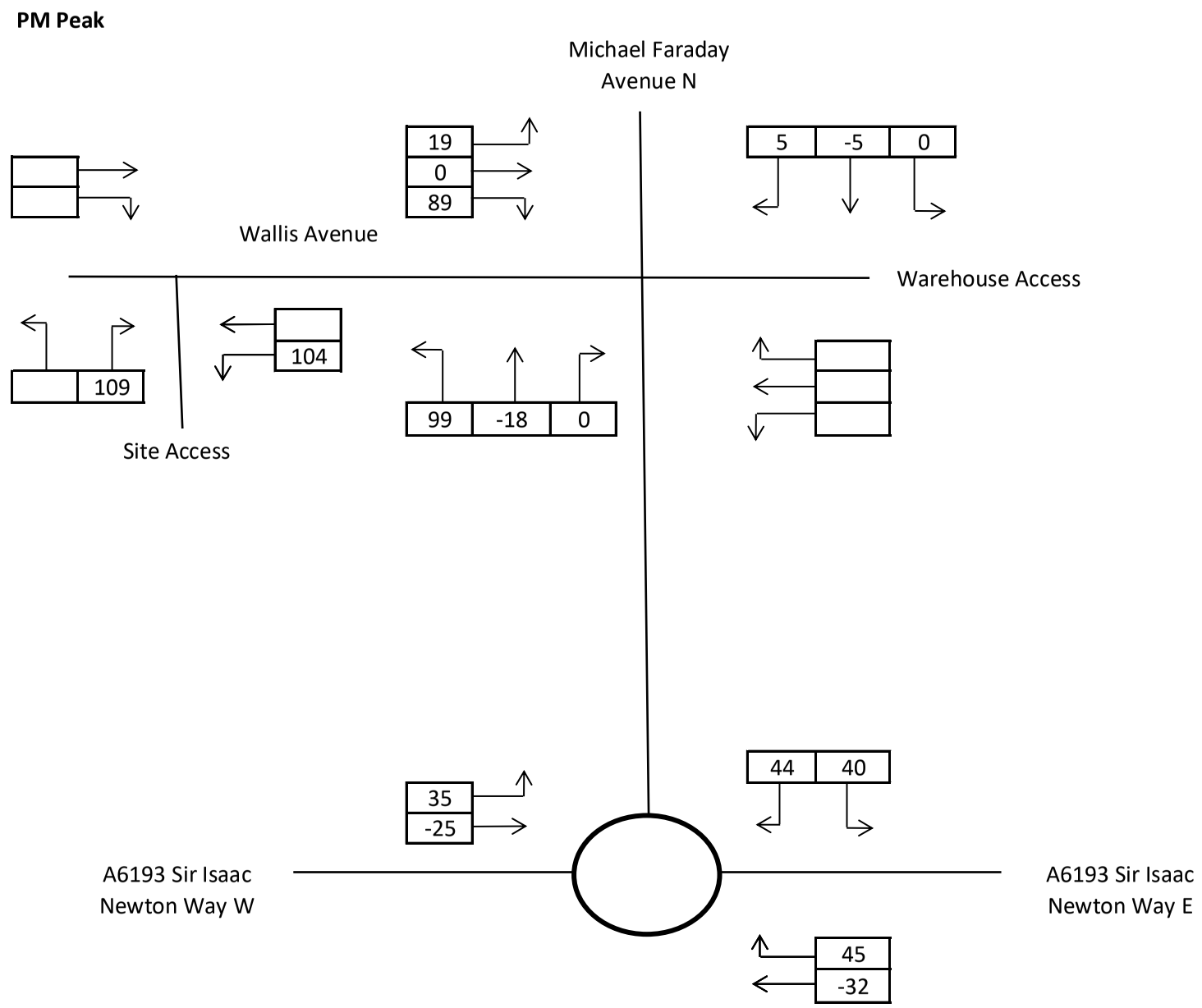

DYNAMIC TRANSPORT PLANNING	Wider Diverted Trip Assignment	22/09/2023	Job Number: 3705023
	Proposed Mixed-Use Development, A6193, Kingsway Business Park, Rochdale	Traffic Figure 10	

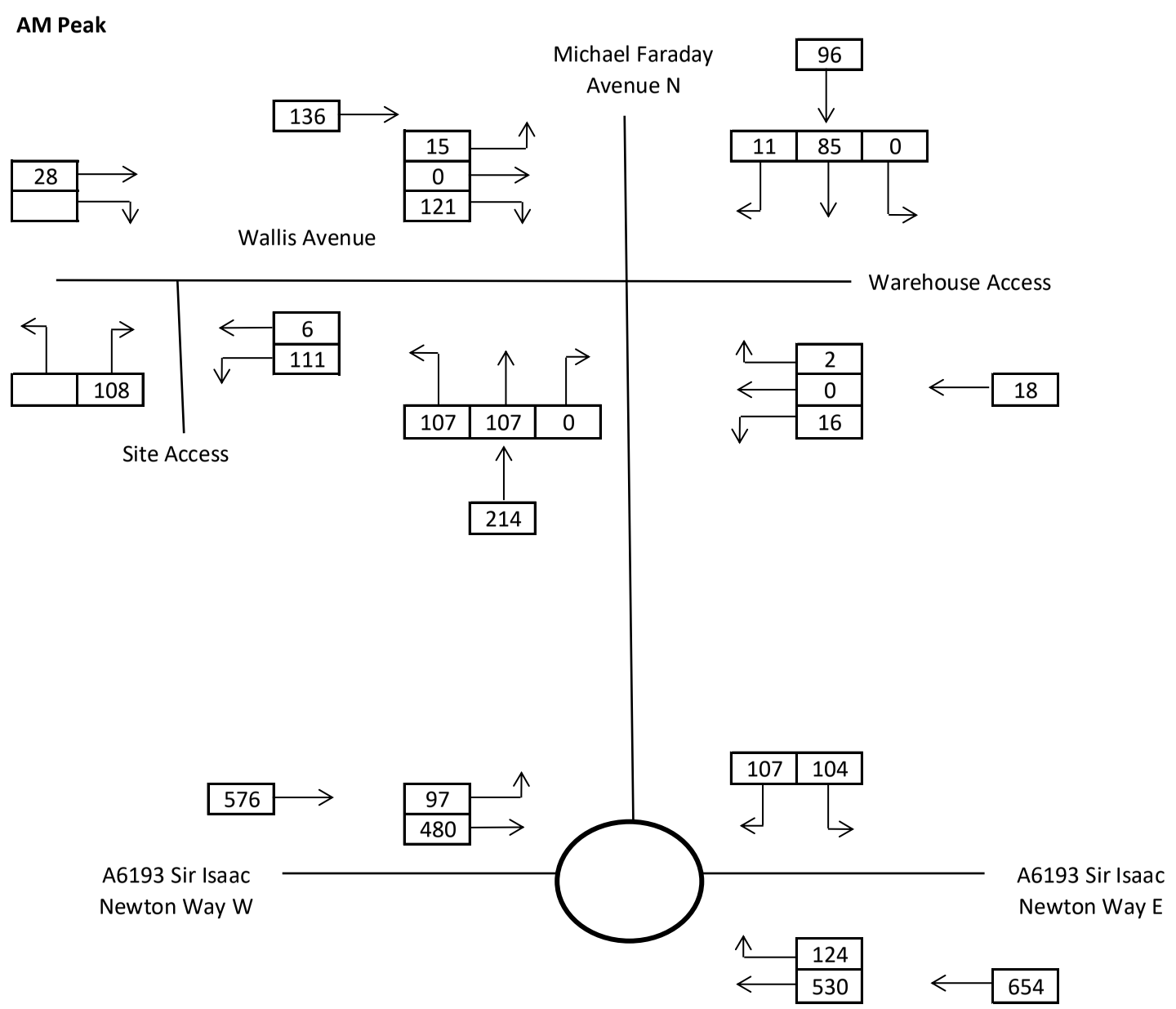

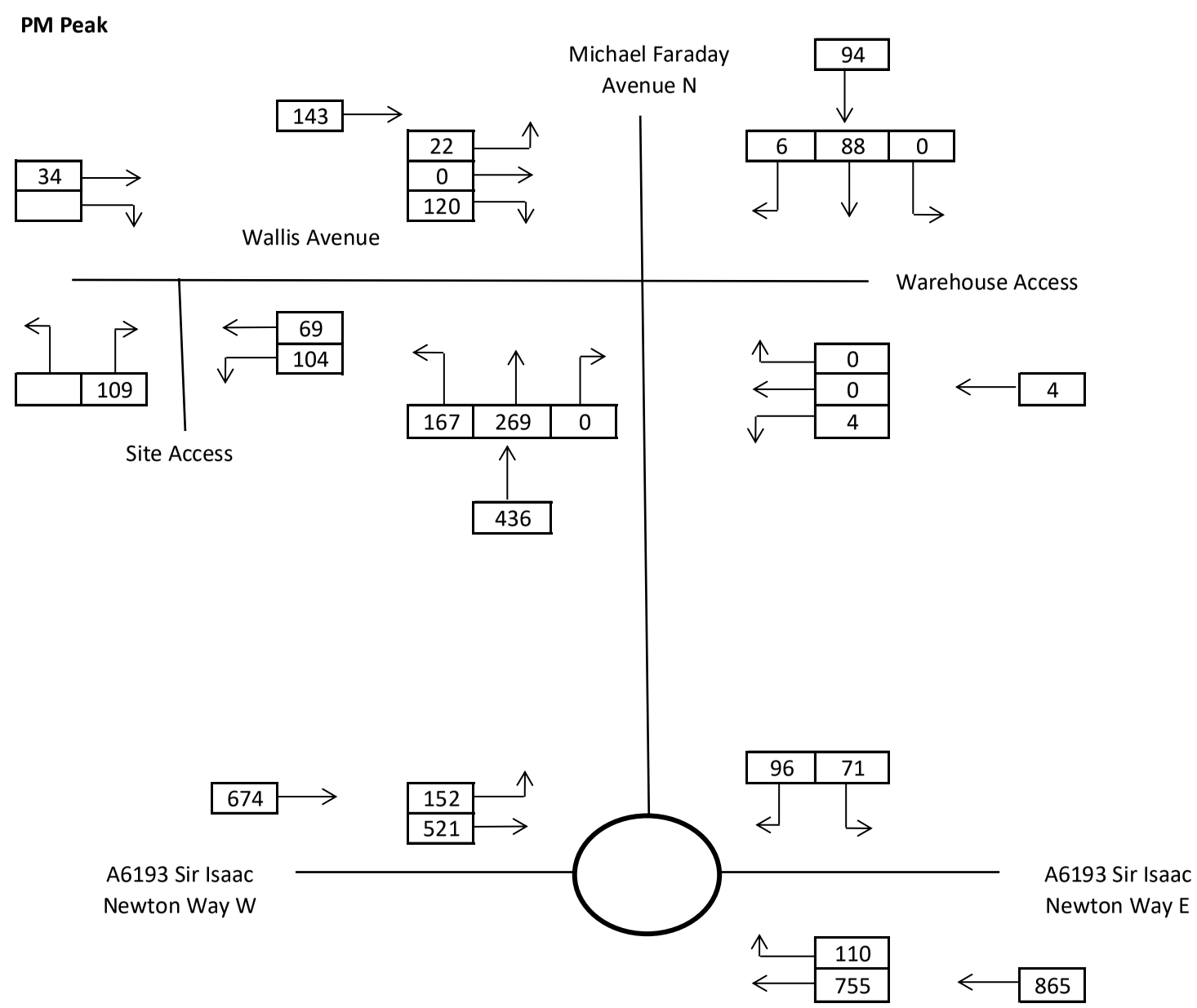

DYNAMIC TRANSPORT PLANNING	Assessment Flows 2024	22/09/2023	Job Number: 3705023
	Proposed Mixed-Use Development, A6193, Kingsway Business Park, Rochdale	Traffic Figure 11	

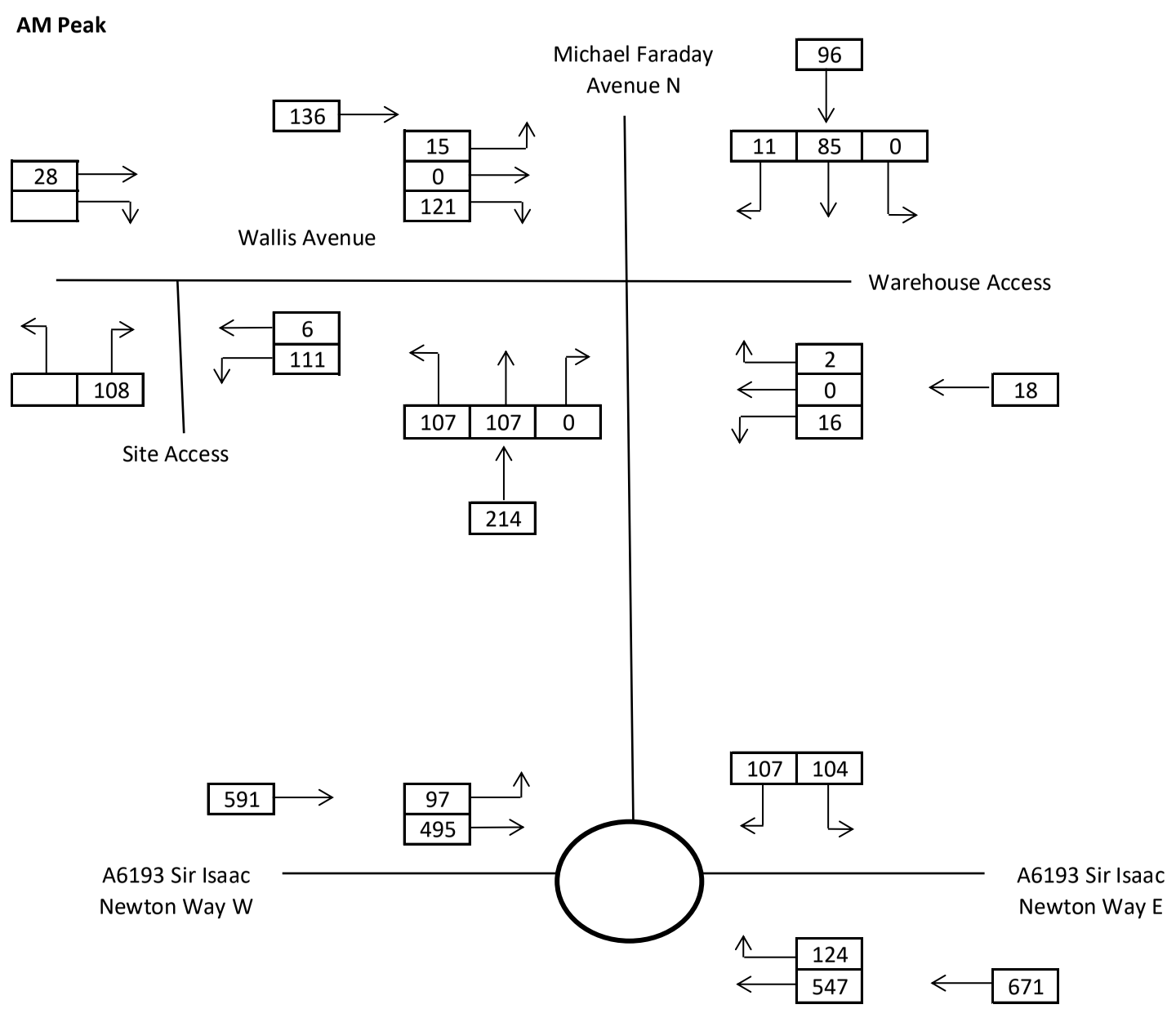

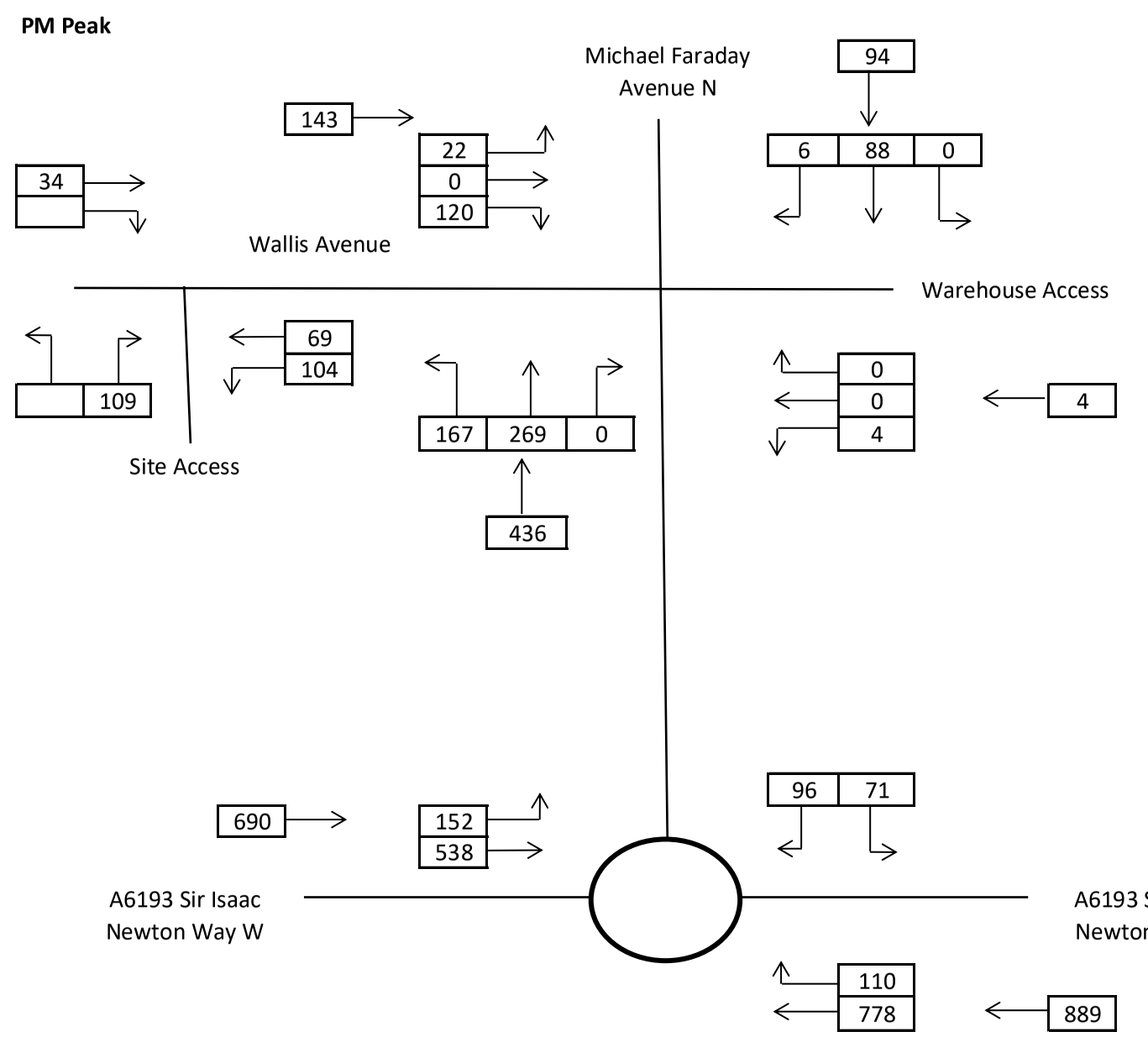

DYNAMIC TRANSPORT PLANNING	Assessment Flows 2024	22/09/2023	Job Number: 3705023
	Proposed Mixed-Use Development, A6193, Kingsway Business Park, Rochdale	Traffic Figure 12	

Appendix 6
Model Output Reports

Junctions 9

ARCADY 9 - Roundabout Module

Version: 9.5.1.7462
© Copyright TRL Limited, 2019

For sales and distribution information, program advice and maintenance, contact TRL:
+44 (0)1344 379777 software@trl.co.uk www.trlsoftware.co.uk

The users of this computer program for the solution of an engineering problem are in no way relieved of their responsibility for the correctness of the solution

Filename: Farraday Av-Wallis Av ARCADY.j9
Path: C:\Users\RachaelLough\Dynamic Transport Planning Limited\Dynamic Transport Planning Limited - Job Library\2023\3705023 - Sir Isaac Way Kingsway\5 - Traffic Data
Report generation date: 20/09/2023 11:21:41

»Existing Layout - 2023 Base, AM
»Existing Layout - 2023 Base, PM
»Existing Layout - 2024 Base, AM
»Existing Layout - 2024 Base, PM
»Existing Layout - 2028 Base, AM
»Existing Layout - 2028 Base, PM
»Existing Layout - 2024 Base + Development, AM
»Existing Layout - 2024 Base + Development , PM
»Existing Layout - 2028 Base + Development , AM
»Existing Layout - 2028 Base + Development , PM

Summary of junction performance

	AM					PM				
	Set ID	Queue (PCU)	Delay (s)	RFC	LOS	Set ID	Queue (PCU)	Delay (s)	RFC	LOS
Existing Layout - 2023 Base										
Arm 1	D1	0.1	2.83	0.09	A	D2	0.1	2.79	0.06	A
Arm 2		0.6	3.00	0.35	A		0.9	3.60	0.46	A
Arm 3		0.4	2.05	0.24	A		0.4	2.15	0.28	A
Existing Layout - 2024 Base										
Arm 1	D3	0.1	2.84	0.09	A	D4	0.1	2.80	0.06	A
Arm 2		0.6	3.01	0.35	A		0.9	3.62	0.46	A
Arm 3		0.4	2.05	0.24	A		0.4	2.16	0.29	A
Existing Layout - 2028 Base										
Arm 1	D5	0.1	2.86	0.09	A	D6	0.1	2.82	0.06	A
Arm 2		0.6	3.05	0.36	A		1.0	3.71	0.47	A
Arm 3		0.4	2.07	0.25	A		0.5	2.18	0.29	A
Existing Layout - 2024 Base + Development										
Arm 1	D7	0.2	2.99	0.15	A	D8	0.2	2.95	0.12	A
Arm 2		0.6	3.12	0.36	A		1.0	3.79	0.48	A
Arm 3		0.4	2.11	0.25	A		0.5	2.22	0.29	A
Existing Layout - 2028 Base + Development										
Arm 1	D9	0.2	3.02	0.15	A	D10	0.2	2.98	0.12	A
Arm 2		0.6	3.17	0.37	A		1.1	3.89	0.49	A
Arm 3		0.4	2.13	0.26	A		0.5	2.25	0.30	A

Values shown are the highest values encountered over all time segments. Delay is the maximum value of average delay per arriving vehicle.

File summary

File Description

Title	Sir Isaac Newton Way
Location	Rochdale
Site number	
Date	19/09/2023
Version	
Status	(new file)
Identifier	
Client	
Jobnumber	3705023
Enumerator	AzureAD\RachaelLough
Description	

Units

Distance units	Speed units	Traffic units input	Traffic units results	Flow units	Average delay units	Total delay units	Rate of delay units
m	kph	PCU	PCU	perHour	s	-Min	perMin

Analysis Options

Vehicle length (m)	Calculate Queue Percentiles	Calculate detailed queueing delay	Calculate residual capacity	RFC Threshold	Average Delay threshold (s)	Queue threshold (PCU)
5.75				0.85	36.00	20.00

Demand Set Summary

ID	Scenario name	Time Period name	Traffic profile type	Start time (HH:mm)	Finish time (HH:mm)	Time segment length (min)	Run automatically
D1	2023 Base	AM	ONE HOUR	07:45	09:15	15	✓
D2	2023 Base	PM	ONE HOUR	16:45	18:15	15	✓
D3	2024 Base	AM	ONE HOUR	07:45	09:15	15	✓
D4	2024 Base	PM	ONE HOUR	16:45	18:15	15	✓
D5	2028 Base	AM	ONE HOUR	07:45	09:15	15	✓
D6	2028 Base	PM	ONE HOUR	16:45	18:15	15	✓
D7	2024 Base + Development	AM	ONE HOUR	07:45	09:15	15	✓
D8	2024 Base + Development	PM	ONE HOUR	16:45	18:15	15	✓
D9	2028 Base + Development	AM	ONE HOUR	07:45	09:15	15	✓
D10	2028 Base + Development	PM	ONE HOUR	16:45	18:15	15	✓

Analysis Set Details

ID	Name	Include in report	Network flow scaling factor (%)	Network capacity scaling factor (%)
A1	Existing Layout	✓	100.000	100.000

Existing Layout - 2023 Base, AM

Data Errors and Warnings

No errors or warnings

Junction Network

Junctions

Junction	Name	Junction type	Use circulating lanes	Arm order	Junction Delay (s)	Junction LOS
1	untitled	Standard Roundabout		1, 2, 3	2.58	A

Junction Network Options

Driving side	Lighting
Left	Normal/unknown

Arms

Arms

Arm	Name	Description
1	untitled	
2	untitled	
3	untitled	

Roundabout Geometry

Arm	V - Approach road half-width (m)	E - Entry width (m)	l' - Effective flare length (m)	R - Entry radius (m)	D - Inscribed circle diameter (m)	PHI - Conflict (entry) angle (deg)	Exit only
1	3.65	7.70	25.0	40.0	50.0	40.0	
2	5.00	8.00	30.0	25.0	27.0	50.0	
3	7.00	10.60	15.0	45.0	37.0	50.0	

Slope / Intercept / Capacity

Roundabout Slope and Intercept used in model

Arm	Final slope	Final intercept (PCU/hr)
1	0.642	1895
2	0.718	2072
3	0.821	2622

The slope and intercept shown above include any corrections and adjustments.

Traffic Demand

Demand Set Details

ID	Scenario name	Time Period name	Traffic profile type	Start time (HH:mm)	Finish time (HH:mm)	Time segment length (min)	Run automatically
D1	2023 Base	AM	ONE HOUR	07:45	09:15	15	✓

Default vehicle mix	Vehicle mix varies over turn	Vehicle mix varies over entry	Vehicle mix source	PCU Factor for a HV (PCU)
✓	✓	✓	HV Percentages	2.00

Demand overview (Traffic)

Arm	Linked arm	Profile type	Use O-D data	Average Demand (PCU/hr)	Scaling Factor (%)
1		ONE HOUR	✓	127	100.000
2		ONE HOUR	✓	637	100.000
3		ONE HOUR	✓	561	100.000

Origin-Destination Data

Demand (PCU/hr)

		To		
		1	2	3
From	1	0	63	64
	2	78	0	559
	3	56	505	0

Vehicle Mix

Heavy Vehicle Percentages

		To		
		1	2	3
From	1	10	10	10
	2	10	10	10
	3	10	10	10

Results

Results Summary for whole modelled period

Arm	Max RFC	Max Delay (s)	Max Queue (PCU)	Max LOS	Average Demand (PCU/hr)	Total Junction Arrivals (PCU)
1	0.09	2.83	0.1	A	117	175
2	0.35	3.00	0.6	A	585	877
3	0.24	2.05	0.4	A	515	772

Existing Layout - 2023 Base, PM

Data Errors and Warnings

No errors or warnings

Junction Network

Junctions

Junction	Name	Junction type	Use circulating lanes	Arm order	Junction Delay (s)	Junction LOS
1	untitled	Standard Roundabout		1, 2, 3	2.96	A

Junction Network Options

Driving side	Lighting
Left	Normal/unknown

Traffic Demand

Demand Set Details

ID	Scenario name	Time Period name	Traffic profile type	Start time (HH:mm)	Finish time (HH:mm)	Time segment length (min)	Run automatically
D2	2023 Base	PM	ONE HOUR	16:45	18:15	15	✓

Default vehicle mix	Vehicle mix varies over turn	Vehicle mix varies over entry	Vehicle mix source	PCU Factor for a HV (PCU)
✓	✓	✓	HV Percentages	2.00

Demand overview (Traffic)

Arm	Linked arm	Profile type	Use O-D data	Average Demand (PCU/hr)	Scaling Factor (%)
1		ONE HOUR	✓	83	100.000
2		ONE HOUR	✓	847	100.000
3		ONE HOUR	✓	660	100.000

Origin-Destination Data

Demand (PCU/hr)

		To		
		1	2	3
From	1	0	31	52
	2	65	0	782
	3	117	543	0

Vehicle Mix

Heavy Vehicle Percentages

		To		
		1	2	3
From	1	10	10	10
	2	10	10	10
	3	10	10	10

Results

Results Summary for whole modelled period

Arm	Max RFC	Max Delay (s)	Max Queue (PCU)	Max LOS	Average Demand (PCU/hr)	Total Junction Arrivals (PCU)
1	0.06	2.79	0.1	A	76	114
2	0.46	3.60	0.9	A	777	1166
3	0.28	2.15	0.4	A	606	908

Existing Layout - 2024 Base, AM

Data Errors and Warnings

No errors or warnings

Junction Network

Junctions

Junction	Name	Junction type	Use circulating lanes	Arm order	Junction Delay (s)	Junction LOS
1	untitled	Standard Roundabout		1, 2, 3	2.59	A

Junction Network Options

Driving side	Lighting
Left	Normal/unknown

Traffic Demand

Demand Set Details

ID	Scenario name	Time Period name	Traffic profile type	Start time (HH:mm)	Finish time (HH:mm)	Time segment length (min)	Run automatically
D3	2024 Base	AM	ONE HOUR	07:45	09:15	15	✓

Default vehicle mix	Vehicle mix varies over turn	Vehicle mix varies over entry	Vehicle mix source	PCU Factor for a HV (PCU)
✓	✓	✓	HV Percentages	2.00

Demand overview (Traffic)

Arm	Linked arm	Profile type	Use O-D data	Average Demand (PCU/hr)	Scaling Factor (%)
1		ONE HOUR	✓	127	100.000
2		ONE HOUR	✓	641	100.000
3		ONE HOUR	✓	565	100.000

Origin-Destination Data

Demand (PCU/hr)

		To		
		1	2	3
From	1	0	63	64
	2	78	0	563
	3	56	509	0

Vehicle Mix

Heavy Vehicle Percentages

		To		
		1	2	3
From	1	10	10	10
	2	10	10	10
	3	10	10	10

Results

Results Summary for whole modelled period

Arm	Max RFC	Max Delay (s)	Max Queue (PCU)	Max LOS	Average Demand (PCU/hr)	Total Junction Arrivals (PCU)
1	0.09	2.84	0.1	A	117	175
2	0.35	3.01	0.6	A	588	882
3	0.24	2.05	0.4	A	518	778

Existing Layout - 2024 Base, PM

Data Errors and Warnings

No errors or warnings

Junction Network

Junctions

Junction	Name	Junction type	Use circulating lanes	Arm order	Junction Delay (s)	Junction LOS
1	untitled	Standard Roundabout		1, 2, 3	2.97	A

Junction Network Options

Driving side	Lighting
Left	Normal/unknown

Traffic Demand

Demand Set Details

ID	Scenario name	Time Period name	Traffic profile type	Start time (HH:mm)	Finish time (HH:mm)	Time segment length (min)	Run automatically
D4	2024 Base	PM	ONE HOUR	16:45	18:15	15	✓

Default vehicle mix	Vehicle mix varies over turn	Vehicle mix varies over entry	Vehicle mix source	PCU Factor for a HV (PCU)
✓	✓	✓	HV Percentages	2.00

Demand overview (Traffic)

Arm	Linked arm	Profile type	Use O-D data	Average Demand (PCU/hr)	Scaling Factor (%)
1		ONE HOUR	✓	83	100.000
2		ONE HOUR	✓	852	100.000
3		ONE HOUR	✓	664	100.000

Origin-Destination Data

Demand (PCU/hr)

		To		
		1	2	3
From	1	0	31	52
	2	65	0	787
	3	117	547	0

Vehicle Mix

Heavy Vehicle Percentages

		To		
		1	2	3
From	1	10	10	10
	2	10	10	10
	3	10	10	10

Results

Results Summary for whole modelled period

Arm	Max RFC	Max Delay (s)	Max Queue (PCU)	Max LOS	Average Demand (PCU/hr)	Total Junction Arrivals (PCU)
1	0.06	2.80	0.1	A	76	114
2	0.46	3.62	0.9	A	782	1173
3	0.29	2.16	0.4	A	609	914

Existing Layout - 2028 Base, AM

Data Errors and Warnings

No errors or warnings

Junction Network

Junctions

Junction	Name	Junction type	Use circulating lanes	Arm order	Junction Delay (s)	Junction LOS
1	untitled	Standard Roundabout		1, 2, 3	2.62	A

Junction Network Options

Driving side	Lighting
Left	Normal/unknown

Traffic Demand

Demand Set Details

ID	Scenario name	Time Period name	Traffic profile type	Start time (HH:mm)	Finish time (HH:mm)	Time segment length (min)	Run automatically
D5	2028 Base	AM	ONE HOUR	07:45	09:15	15	✓

Default vehicle mix	Vehicle mix varies over turn	Vehicle mix varies over entry	Vehicle mix source	PCU Factor for a HV (PCU)
✓	✓	✓	HV Percentages	2.00

Demand overview (Traffic)

Arm	Linked arm	Profile type	Use O-D data	Average Demand (PCU/hr)	Scaling Factor (%)
1		ONE HOUR	✓	127	100.000
2		ONE HOUR	✓	658	100.000
3		ONE HOUR	✓	580	100.000

Origin-Destination Data

Demand (PCU/hr)

		To		
		1	2	3
From	1	0	63	64
	2	78	0	580
	3	56	524	0

Vehicle Mix

Heavy Vehicle Percentages

		To		
		1	2	3
From	1	10	10	10
	2	10	10	10
	3	10	10	10

Results

Results Summary for whole modelled period

Arm	Max RFC	Max Delay (s)	Max Queue (PCU)	Max LOS	Average Demand (PCU/hr)	Total Junction Arrivals (PCU)
1	0.09	2.86	0.1	A	117	175
2	0.36	3.05	0.6	A	604	906
3	0.25	2.07	0.4	A	532	798

Existing Layout - 2028 Base, PM

Data Errors and Warnings

No errors or warnings

Junction Network

Junctions

Junction	Name	Junction type	Use circulating lanes	Arm order	Junction Delay (s)	Junction LOS
1	untitled	Standard Roundabout		1, 2, 3	3.03	A

Junction Network Options

Driving side	Lighting
Left	Normal/unknown

Traffic Demand

Demand Set Details

ID	Scenario name	Time Period name	Traffic profile type	Start time (HH:mm)	Finish time (HH:mm)	Time segment length (min)	Run automatically
D6	2028 Base	PM	ONE HOUR	16:45	18:15	15	✓

Default vehicle mix	Vehicle mix varies over turn	Vehicle mix varies over entry	Vehicle mix source	PCU Factor for a HV (PCU)
✓	✓	✓	HV Percentages	2.00

Demand overview (Traffic)

Arm	Linked arm	Profile type	Use O-D data	Average Demand (PCU/hr)	Scaling Factor (%)
1		ONE HOUR	✓	83	100.000
2		ONE HOUR	✓	876	100.000
3		ONE HOUR	✓	680	100.000

Origin-Destination Data

Demand (PCU/hr)

		To		
		1	2	3
From	1	0	31	52
	2	65	0	811
	3	117	563	0

Vehicle Mix

Heavy Vehicle Percentages

		To		
		1	2	3
From	1	10	10	10
	2	10	10	10
	3	10	10	10

Results

Results Summary for whole modelled period

Arm	Max RFC	Max Delay (s)	Max Queue (PCU)	Max LOS	Average Demand (PCU/hr)	Total Junction Arrivals (PCU)
1	0.06	2.82	0.1	A	76	114
2	0.47	3.71	1.0	A	804	1206
3	0.29	2.18	0.5	A	624	936

Existing Layout - 2024 Base + Development, AM

Data Errors and Warnings

No errors or warnings

Junction Network

Junctions

Junction	Name	Junction type	Use circulating lanes	Arm order	Junction Delay (s)	Junction LOS
1	untitled	Standard Roundabout		1, 2, 3	2.70	A

Junction Network Options

Driving side	Lighting
Left	Normal/unknown

Traffic Demand

Demand Set Details

ID	Scenario name	Time Period name	Traffic profile type	Start time (HH:mm)	Finish time (HH:mm)	Time segment length (min)	Run automatically
D7	2024 Base + Development	AM	ONE HOUR	07:45	09:15	15	✓

Default vehicle mix	Vehicle mix varies over turn	Vehicle mix varies over entry	Vehicle mix source	PCU Factor for a HV (PCU)
✓	✓	✓	HV Percentages	2.00

Demand overview (Traffic)

Arm	Linked arm	Profile type	Use O-D data	Average Demand (PCU/hr)	Scaling Factor (%)
1		ONE HOUR	✓	211	100.000
2		ONE HOUR	✓	654	100.000
3		ONE HOUR	✓	577	100.000

Origin-Destination Data

Demand (PCU/hr)

		To		
		1	2	3
From	1	0	104	107
	2	124	0	530
	3	97	480	0

Vehicle Mix

Heavy Vehicle Percentages

		To		
		1	2	3
From	1	10	10	10
	2	10	10	10
	3	10	10	10

Results

Results Summary for whole modelled period

Arm	Max RFC	Max Delay (s)	Max Queue (PCU)	Max LOS	Average Demand (PCU/hr)	Total Junction Arrivals (PCU)
1	0.15	2.99	0.2	A	194	290
2	0.36	3.12	0.6	A	600	900
3	0.25	2.11	0.4	A	529	794

Existing Layout - 2024 Base + Development , PM

Data Errors and Warnings

No errors or warnings

Junction Network

Junctions

Junction	Name	Junction type	Use circulating lanes	Arm order	Junction Delay (s)	Junction LOS
1	untitled	Standard Roundabout		1, 2, 3	3.09	A

Junction Network Options

Driving side	Lighting
Left	Normal/unknown

Traffic Demand

Demand Set Details

ID	Scenario name	Time Period name	Traffic profile type	Start time (HH:mm)	Finish time (HH:mm)	Time segment length (min)	Run automatically
D8	2024 Base + Development	PM	ONE HOUR	16:45	18:15	15	✓

Default vehicle mix	Vehicle mix varies over turn	Vehicle mix varies over entry	Vehicle mix source	PCU Factor for a HV (PCU)
✓	✓	✓	HV Percentages	2.00

Demand overview (Traffic)

Arm	Linked arm	Profile type	Use O-D data	Average Demand (PCU/hr)	Scaling Factor (%)
1		ONE HOUR	✓	167	100.000
2		ONE HOUR	✓	865	100.000
3		ONE HOUR	✓	673	100.000

Origin-Destination Data

Demand (PCU/hr)

		To		
		1	2	3
From	1	0	71	96
	2	110	0	755
	3	152	521	0

Vehicle Mix

Heavy Vehicle Percentages

		To		
		1	2	3
From	1	10	10	10
	2	10	10	10
	3	10	10	10

Results

Results Summary for whole modelled period

Arm	Max RFC	Max Delay (s)	Max Queue (PCU)	Max LOS	Average Demand (PCU/hr)	Total Junction Arrivals (PCU)
1	0.12	2.95	0.2	A	153	230
2	0.48	3.79	1.0	A	794	1191
3	0.29	2.22	0.5	A	618	926

Existing Layout - 2028 Base + Development , AM

Data Errors and Warnings

No errors or warnings

Junction Network

Junctions

Junction	Name	Junction type	Use circulating lanes	Arm order	Junction Delay (s)	Junction LOS
1	untitled	Standard Roundabout		1, 2, 3	2.73	A

Junction Network Options

Driving side	Lighting
Left	Normal/unknown

Traffic Demand

Demand Set Details

ID	Scenario name	Time Period name	Traffic profile type	Start time (HH:mm)	Finish time (HH:mm)	Time segment length (min)	Run automatically
D9	2028 Base + Development	AM	ONE HOUR	07:45	09:15	15	✓

Default vehicle mix	Vehicle mix varies over turn	Vehicle mix varies over entry	Vehicle mix source	PCU Factor for a HV (PCU)
✓	✓	✓	HV Percentages	2.00

Demand overview (Traffic)

Arm	Linked arm	Profile type	Use O-D data	Average Demand (PCU/hr)	Scaling Factor (%)
1		ONE HOUR	✓	211	100.000
2		ONE HOUR	✓	671	100.000
3		ONE HOUR	✓	592	100.000

Origin-Destination Data

Demand (PCU/hr)

		To		
		1	2	3
From	1	0	104	107
	2	124	0	547
	3	97	495	0

Vehicle Mix

Heavy Vehicle Percentages

		To		
		1	2	3
From	1	10	10	10
	2	10	10	10
	3	10	10	10

Results

Results Summary for whole modelled period

Arm	Max RFC	Max Delay (s)	Max Queue (PCU)	Max LOS	Average Demand (PCU/hr)	Total Junction Arrivals (PCU)
1	0.15	3.02	0.2	A	194	290
2	0.37	3.17	0.6	A	616	924
3	0.26	2.13	0.4	A	543	815

Existing Layout - 2028 Base + Development , PM

Data Errors and Warnings

No errors or warnings

Junction Network

Junctions

Junction	Name	Junction type	Use circulating lanes	Arm order	Junction Delay (s)	Junction LOS
1	untitled	Standard Roundabout		1, 2, 3	3.15	A

Junction Network Options

Driving side	Lighting
Left	Normal/unknown

Traffic Demand

Demand Set Details

ID	Scenario name	Time Period name	Traffic profile type	Start time (HH:mm)	Finish time (HH:mm)	Time segment length (min)	Run automatically
D10	2028 Base + Development	PM	ONE HOUR	16:45	18:15	15	✓

Default vehicle mix	Vehicle mix varies over turn	Vehicle mix varies over entry	Vehicle mix source	PCU Factor for a HV (PCU)
✓	✓	✓	HV Percentages	2.00

Demand overview (Traffic)

Arm	Linked arm	Profile type	Use O-D data	Average Demand (PCU/hr)	Scaling Factor (%)
1		ONE HOUR	✓	167	100.000
2		ONE HOUR	✓	888	100.000
3		ONE HOUR	✓	690	100.000

Origin-Destination Data

Demand (PCU/hr)

		To		
		1	2	3
From	1	0	71	96
	2	110	0	778
	3	152	538	0

Vehicle Mix

Heavy Vehicle Percentages

		To		
		1	2	3
From	1	10	10	10
	2	10	10	10
	3	10	10	10

Results

Results Summary for whole modelled period

Arm	Max RFC	Max Delay (s)	Max Queue (PCU)	Max LOS	Average Demand (PCU/hr)	Total Junction Arrivals (PCU)
1	0.12	2.98	0.2	A	153	230
2	0.49	3.89	1.1	A	815	1222
3	0.30	2.25	0.5	A	633	950

Junctions 9

PICADY 9 - Priority Intersection Module

Version: 9.5.1.7462
© Copyright TRL Limited, 2019

For sales and distribution information, program advice and maintenance, contact TRL:
+44 (0)1344 379777 software@trl.co.uk www.trlsoftware.co.uk

The users of this computer program for the solution of an engineering problem are in no way relieved of their responsibility for the correctness of the solution

Filename: Faraday Av - Wallis Av 2028 Base.j9
Path: C:\Users\JordanBell\OneDrive - Dynamic Transport Planning Limited\Shared Documents - Dynamic Transport Planning Limited\Job Library\2023\3705023 - Sir Isaac Way Kingsway\5 - Traffic Data
Report generation date: 19/09/2023 14:56:57

»Existing Layout - 2023 Base, AM
»Existing Layout - 2023 Base, PM
»Existing Layout - 2024 Base, AM
»Existing Layout - 2024 Base, PM
»Existing Layout - 2028 Base, AM
»Existing Layout - 2028 Base, PM
»Existing Layout - 2024 Base + Development, AM
»Existing Layout - 2024 Base + Development, PM
»Existing Layout - 2028 Base + Development, AM
»Existing Layout - 2028 Base + Development, PM

Summary of junction performance

	AM			PM		
	Queue (PCU)	Delay (s)	RFC	Queue (PCU)	Delay (s)	RFC
Existing Layout - 2023 Base						
Stream B-CD	0.0	5.72	0.02	0.0	0.00	0.00
Stream B-AD	0.0	8.46	0.00	0.0	0.00	0.00
Stream A-BCD	0.0	0.00	0.00	0.0	6.38	0.00
Stream D-ABC	0.1	7.49	0.06	0.1	8.28	0.07
Stream C-ABD	0.0	0.00	0.00	0.0	0.00	0.00
Existing Layout - 2024 Base						
Stream B-CD	0.0	5.72	0.02	0.0	0.00	0.00
Stream B-AD	0.0	8.46	0.00	0.0	0.00	0.00
Stream A-BCD	0.0	0.00	0.00	0.0	6.38	0.00
Stream D-ABC	0.1	7.49	0.06	0.1	8.28	0.07
Stream C-ABD	0.0	0.00	0.00	0.0	0.00	0.00
Existing Layout - 2028 Base						
Stream B-CD	0.0	5.72	0.02	0.0	0.00	0.00
Stream B-AD	0.0	8.46	0.00	0.0	0.00	0.00
Stream A-BCD	0.0	0.00	0.00	0.0	6.38	0.00
Stream D-ABC	0.1	7.49	0.06	0.1	8.28	0.07
Stream C-ABD	0.0	0.00	0.00	0.0	0.00	0.00
Existing Layout - 2024 Base + Development						
Stream B-CD	0.0	5.70	0.02	0.0	0.00	0.00
Stream B-AD	0.0	8.70	0.00	0.0	0.00	0.00
Stream A-BCD	0.0	6.22	0.02	0.0	6.70	0.01
Stream D-ABC	0.4	9.65	0.27	0.5	10.99	0.30
Stream C-ABD	0.0	0.00	0.00	0.0	0.00	0.00
Existing Layout - 2028 Base + Development						
Stream B-CD	0.0	5.70	0.02	0.0	0.00	0.00
Stream B-AD	0.0	8.70	0.00	0.0	0.00	0.00
Stream A-BCD	0.0	6.22	0.02	0.0	6.70	0.01
Stream D-ABC	0.4	9.65	0.27	0.5	10.99	0.30
Stream C-ABD	0.0	0.00	0.00	0.0	0.00	0.00

Values shown are the highest values encountered over all time segments. Delay is the maximum value of average delay per arriving vehicle.

File summary

File Description

Title	Retail and Drive-Thru Development
Location	Kingsway, Rochdale
Site number	
Date	16/08/2023
Version	
Status	
Identifier	
Client	
Jobnumber	3705023
Enumerator	DTP
Description	

Units

Distance units	Speed units	Traffic units input	Traffic units results	Flow units	Average delay units	Total delay units	Rate of delay units
m	kph	PCU	PCU	perHour	s	-Min	perMin

Analysis Options

Vehicle length (m)	Calculate Queue Percentiles	Calculate detailed queueing delay	Calculate residual capacity	RFC Threshold	Average Delay threshold (s)	Queue threshold (PCU)
5.75				0.85	36.00	20.00

Demand Set Summary

ID	Scenario name	Time Period name	Traffic profile type	Start time (HH:mm)	Finish time (HH:mm)	Time segment length (min)	Run automatically
D1	2023 Base	AM	ONE HOUR	07:45	09:15	15	✓
D2	2023 Base	PM	ONE HOUR	16:45	18:15	15	✓
D3	2024 Base	AM	ONE HOUR	07:45	09:15	15	✓
D4	2024 Base	PM	ONE HOUR	16:45	18:15	15	✓
D5	2028 Base	AM	ONE HOUR	07:45	09:15	15	✓
D6	2028 Base	PM	ONE HOUR	16:45	18:15	15	✓
D7	2024 Base + Development	AM	ONE HOUR	07:45	09:15	15	✓
D8	2024 Base + Development	PM	ONE HOUR	16:45	18:15	15	✓
D9	2028 Base + Development	AM	ONE HOUR	07:45	09:15	15	✓
D10	2028 Base + Development	PM	ONE HOUR	16:45	18:15	15	✓

Analysis Set Details

ID	Name	Include in report	Network flow scaling factor (%)	Network capacity scaling factor (%)
A1	Existing Layout	✓	100.000	100.000

Existing Layout - 2023 Base, AM

Data Errors and Warnings

No errors or warnings

Junction Network

Junctions

Junction	Name	Junction type	Major road direction	Use circulating lanes	Junction Delay (s)	Junction LOS
1	untitled	Crossroads	Two-way		1.18	A

Junction Network Options

Driving side	Lighting
Left	Normal/unknown

Arms

Arms

Arm	Name	Description	Arm type
A	Michael Farraday Av N		Major
B	JD Egress		Minor
C	Michael Farraday Av S		Major
D	Wallis Av		Minor

Major Arm Geometry

Arm	Width of carriageway (m)	Has kerbed central reserve	Has right turn bay	Visibility for right turn (m)	Blocks?	Blocking queue (PCU)
A	7.30			120.0	✓	0.00
C	7.30			120.0	✓	0.00

Geometries for Arm C are measured opposite Arm B. Geometries for Arm A (if relevant) are measured opposite Arm D.

Minor Arm Geometry

Arm	Minor arm type	Lane width (m)	Width at give-way (m)	Width at 5m (m)	Width at 10m (m)	Width at 15m (m)	Width at 20m (m)	Estimate flare length	Flare length (PCU)	Visibility to left (m)	Visibility to right (m)
B	One lane plus flare		10.00	8.70	5.40	4.00	3.10	✓	2.00	43	40
D	One lane	5.00								42	40

Slope / Intercept / Capacity

Priority Intersection Slopes and Intercepts

Stream	Intercept (PCU/hr)	Slope for A-B	Slope for A-C	Slope for A-D	Slope for B-A	Slope for B-C	Slope for B-D	Slope for C-A	Slope for C-B	Slope for C-D	Slope for D-A	Slope for D-B	Slope for D-C
A-D	643	-	-	-	-	-	-	0.235	0.336	0.235	-	-	-
B-A	516	0.089	0.224	0.224	-	-	-	0.141	0.320	-	0.224	0.224	0.112
B-C	739	0.107	0.270	-	-	-	-	-	-	-	-	-	-
B-D, nearside lane	582	0.100	0.253	0.253	-	-	-	0.159	0.361	0.159	-	-	-
B-D, offside lane	516	0.089	0.224	0.224	-	-	-	0.141	0.320	0.141	-	-	-
C-B	643	0.235	0.235	0.336	-	-	-	-	-	-	-	-	-
D-A	779	-	-	-	-	-	-	0.285	-	0.113	-	-	-
D-B, nearside lane	613	0.168	0.168	0.380	-	-	-	0.266	0.266	0.105	-	-	-
D-B, offside lane	613	0.168	0.168	0.380	-	-	-	0.266	0.266	0.105	-	-	-
D-C	613	-	0.168	0.380	0.133	0.266	0.266	0.266	0.266	0.105	-	-	-

The slopes and intercepts shown above do NOT include any corrections or adjustments.

Streams may be combined, in which case capacity will be adjusted.

Values are shown for the first time segment only; they may differ for subsequent time segments.

Traffic Demand

Demand Set Details

ID	Scenario name	Time Period name	Traffic profile type	Start time (HH:mm)	Finish time (HH:mm)	Time segment length (min)	Run automatically
D1	2023 Base	AM	ONE HOUR	07:45	09:15	15	✓

Default vehicle mix	Vehicle mix varies over turn	Vehicle mix varies over entry	Vehicle mix source	PCU Factor for a HV (PCU)
✓	✓	✓	HV Percentages	2.00

Demand overview (Traffic)

Arm	Linked arm	Profile type	Use O-D data	Average Demand (PCU/hr)	Scaling Factor (%)
A		ONE HOUR	✓	96	100.000
B		ONE HOUR	✓	18	100.000
C		ONE HOUR	✓	127	100.000
D		ONE HOUR	✓	28	100.000

Origin-Destination Data

Demand (PCU/hr)

		To			
		A	B	C	D
From	A	0	0	96	0
	B	2	0	16	0
	C	121	0	0	6
	D	1	0	27	0

Vehicle Mix

Heavy Vehicle Percentages

		To			
		A	B	C	D
From	A	10	10	10	10
	B	10	10	10	10
	C	10	10	10	10
	D	10	10	10	10

Results

Results Summary for whole modelled period

Stream	Max RFC	Max Delay (s)	Max Queue (PCU)	Max LOS	Average Demand (PCU/hr)	Total Junction Arrivals (PCU)
B-CD	0.02	5.72	0.0	A	15	22
B-AD	0.00	8.46	0.0	A	2	3
A-BCD	0.00	0.00	0.0	A	0	0
A-B					0	0
A-C					88	132
D-ABC	0.06	7.49	0.1	A	26	39
C-ABD	0.00	0.00	0.0	A	0	0
C-D					6	8
C-A					111	167

Main Results for each time segment

07:45 - 08:00

Stream	Total Demand (PCU/hr)	Junction Arrivals (PCU)	Capacity (PCU/hr)	RFC	Throughput (PCU/hr)	Start queue (PCU)	End queue (PCU)	Delay (s)	Unsignalised level of service
B-CD	12	3	719	0.017	12	0.0	0.0	5.603	A
B-AD	2	0.38	485	0.003	1	0.0	0.0	8.192	A
A-BCD	0	0	621	0.000	0	0.0	0.0	0.000	A
A-B	0	0			0				
A-C	72	18			72				
D-ABC	21	5	578	0.036	21	0.0	0.0	7.108	A
C-ABD	0	0	626	0.000	0	0.0	0.0	0.000	A
C-D	5	1			5				
C-A	91	23			91				

08:00 - 08:15

Stream	Total Demand (PCU/hr)	Junction Arrivals (PCU)	Capacity (PCU/hr)	RFC	Throughput (PCU/hr)	Start queue (PCU)	End queue (PCU)	Delay (s)	Unsignalised level of service
B-CD	14	4	715	0.020	14	0.0	0.0	5.653	A
B-AD	2	0.45	479	0.004	2	0.0	0.0	8.302	A
A-BCD	0	0	617	0.000	0	0.0	0.0	0.000	A
A-B	0	0			0				
A-C	86	22			86				
D-ABC	25	6	570	0.044	25	0.0	0.1	7.266	A
C-ABD	0	0	623	0.000	0	0.0	0.0	0.000	A
C-D	5	1			5				
C-A	109	27			109				

08:15 - 08:30

Stream	Total Demand (PCU/hr)	Junction Arrivals (PCU)	Capacity (PCU/hr)	RFC	Throughput (PCU/hr)	Start queue (PCU)	End queue (PCU)	Delay (s)	Unsignalised level of service
B-CD	18	4	709	0.025	18	0.0	0.0	5.723	A
B-AD	2	0.55	470	0.005	2	0.0	0.0	8.460	A
A-BCD	0	0	611	0.000	0	0.0	0.0	0.000	A
A-B	0	0			0				
A-C	106	26			106				
D-ABC	31	8	559	0.055	31	0.1	0.1	7.491	A
C-ABD	0	0	619	0.000	0	0.0	0.0	0.000	A
C-D	7	2			7				
C-A	133	33			133				

08:30 - 08:45

Stream	Total Demand (PCU/hr)	Junction Arrivals (PCU)	Capacity (PCU/hr)	RFC	Throughput (PCU/hr)	Start queue (PCU)	End queue (PCU)	Delay (s)	Unsignalised level of service
B-CD	18	4	709	0.025	18	0.0	0.0	5.723	A
B-AD	2	0.55	470	0.005	2	0.0	0.0	8.460	A
A-BCD	0	0	611	0.000	0	0.0	0.0	0.000	A
A-B	0	0			0				
A-C	106	26			106				
D-ABC	31	8	559	0.055	31	0.1	0.1	7.492	A
C-ABD	0	0	619	0.000	0	0.0	0.0	0.000	A
C-D	7	2			7				
C-A	133	33			133				

08:45 - 09:00

Stream	Total Demand (PCU/hr)	Junction Arrivals (PCU)	Capacity (PCU/hr)	RFC	Throughput (PCU/hr)	Start queue (PCU)	End queue (PCU)	Delay (s)	Unsignalised level of service
B-CD	14	4	715	0.020	14	0.0	0.0	5.653	A
B-AD	2	0.45	479	0.004	2	0.0	0.0	8.304	A
A-BCD	0	0	617	0.000	0	0.0	0.0	0.000	A
A-B	0	0			0				
A-C	86	22			86				
D-ABC	25	6	570	0.044	25	0.1	0.1	7.267	A
C-ABD	0	0	623	0.000	0	0.0	0.0	0.000	A
C-D	5	1			5				
C-A	109	27			109				

09:00 - 09:15

Stream	Total Demand (PCU/hr)	Junction Arrivals (PCU)	Capacity (PCU/hr)	RFC	Throughput (PCU/hr)	Start queue (PCU)	End queue (PCU)	Delay (s)	Unsignalised level of service
B-CD	12	3	719	0.017	12	0.0	0.0	5.603	A
B-AD	2	0.38	485	0.003	2	0.0	0.0	8.192	A
A-BCD	0	0	621	0.000	0	0.0	0.0	0.000	A
A-B	0	0			0				
A-C	72	18			72				
D-ABC	21	5	578	0.036	21	0.1	0.0	7.115	A
C-ABD	0	0	626	0.000	0	0.0	0.0	0.000	A
C-D	5	1			5				
C-A	91	23			91				

Existing Layout - 2023 Base, PM

Data Errors and Warnings

No errors or warnings

Junction Network

Junctions

Junction	Name	Junction type	Major road direction	Use circulating lanes	Junction Delay (s)	Junction LOS
1	untitled	Crossroads	Two-way		0.60	A

Junction Network Options

Driving side	Lighting
Left	Normal/unknown

Traffic Demand

Demand Set Details

ID	Scenario name	Time Period name	Traffic profile type	Start time (HH:mm)	Finish time (HH:mm)	Time segment length (min)	Run automatically
D2	2023 Base	PM	ONE HOUR	16:45	18:15	15	✓

Default vehicle mix	Vehicle mix varies over turn	Vehicle mix varies over entry	Vehicle mix source	PCU Factor for a HV (PCU)
✓	✓	✓	HV Percentages	2.00

Demand overview (Traffic)

Arm	Linked arm	Profile type	Use O-D data	Average Demand (PCU/hr)	Scaling Factor (%)
A		ONE HOUR	✓	94	100.000
B		ONE HOUR	✓	4	100.000
C		ONE HOUR	✓	355	100.000
D		ONE HOUR	✓	34	100.000

Origin-Destination Data

Demand (PCU/hr)

		To			
		A	B	C	D
From	A	0	0	93	1
	B	0	0	4	0
	C	287	0	0	68
	D	3	0	31	0

Vehicle Mix

Heavy Vehicle Percentages

		To			
		A	B	C	D
From	A	10	10	10	10
	B	10	10	10	10
	C	10	10	10	10
	D	10	10	10	10

Results

Results Summary for whole modelled period

Stream	Max RFC	Max Delay (s)	Max Queue (PCU)	Max LOS	Average Demand (PCU/hr)	Total Junction Arrivals (PCU)
B-CD	0.00	0.00	0.0	A	0	0
B-AD	0.00	0.00	0.0	A	0	0
A-BCD	0.00	6.38	0.0	A	1	2
A-B					0	0
A-C					85	128
D-ABC	0.07	8.28	0.1	A	31	47
C-ABD	0.00	0.00	0.0	A	0	0
C-D					62	94
C-A					263	395

Main Results for each time segment

16:45 - 17:00

Stream	Total Demand (PCU/hr)	Junction Arrivals (PCU)	Capacity (PCU/hr)	RFC	Throughput (PCU/hr)	Start queue (PCU)	End queue (PCU)	Delay (s)	Unsignalised level of service
B-CD	0	0	586	0.000	0	0.0	0.0	0.000	A
B-AD	0	0	507	0.000	0	0.0	0.0	0.000	A
A-BCD	0.85	0.21	628	0.001	0.84	0.0	0.0	6.313	A
A-B	0	0			0				
A-C	70	17			70				
D-ABC	26	6	550	0.047	25	0.0	0.1	7.543	A
C-ABD	0	0	627	0.000	0	0.0	0.0	0.000	A
C-D	51	13			51				
C-A	216	54			216				

17:00 - 17:15

Stream	Total Demand (PCU/hr)	Junction Arrivals (PCU)	Capacity (PCU/hr)	RFC	Throughput (PCU/hr)	Start queue (PCU)	End queue (PCU)	Delay (s)	Unsignalised level of service
B-CD	0	0	577	0.000	0	0.0	0.0	0.000	A
B-AD	0	0	496	0.000	0	0.0	0.0	0.000	A
A-BCD	1	0.26	626	0.002	1	0.0	0.0	6.339	A
A-B	0	0			0				
A-C	83	21			83				
D-ABC	31	8	536	0.057	31	0.1	0.1	7.840	A
C-ABD	0	0	623	0.000	0	0.0	0.0	0.000	A
C-D	61	15			61				
C-A	258	65			258				

17:15 - 17:30

Stream	Total Demand (PCU/hr)	Junction Arrivals (PCU)	Capacity (PCU/hr)	RFC	Throughput (PCU/hr)	Start queue (PCU)	End queue (PCU)	Delay (s)	Unsignalised level of service
B-CD	0	0	564	0.000	0	0.0	0.0	0.000	A
B-AD	0	0	481	0.000	0	0.0	0.0	0.000	A
A-BCD	1	0.33	623	0.002	1	0.0	0.0	6.373	A
A-B	0	0			0				
A-C	102	26			102				
D-ABC	37	9	515	0.073	37	0.1	0.1	8.283	A
C-ABD	0	0	619	0.000	0	0.0	0.0	0.000	A
C-D	75	19			75				
C-A	316	79			316				

17:30 - 17:45

Stream	Total Demand (PCU/hr)	Junction Arrivals (PCU)	Capacity (PCU/hr)	RFC	Throughput (PCU/hr)	Start queue (PCU)	End queue (PCU)	Delay (s)	Unsignalised level of service
B-CD	0	0	564	0.000	0	0.0	0.0	0.000	A
B-AD	0	0	481	0.000	0	0.0	0.0	0.000	A
A-BCD	1	0.33	623	0.002	1	0.0	0.0	6.376	A
A-B	0	0			0				
A-C	102	26			102				
D-ABC	37	9	515	0.073	37	0.1	0.1	8.284	A
C-ABD	0	0	619	0.000	0	0.0	0.0	0.000	A
C-D	75	19			75				
C-A	316	79			316				

17:45 - 18:00

Stream	Total Demand (PCU/hr)	Junction Arrivals (PCU)	Capacity (PCU/hr)	RFC	Throughput (PCU/hr)	Start queue (PCU)	End queue (PCU)	Delay (s)	Unsignalised level of service
B-CD	0	0	577	0.000	0	0.0	0.0	0.000	A
B-AD	0	0	496	0.000	0	0.0	0.0	0.000	A
A-BCD	1	0.26	626	0.002	1	0.0	0.0	6.339	A
A-B	0	0			0				
A-C	83	21			83				
D-ABC	31	8	536	0.057	31	0.1	0.1	7.844	A
C-ABD	0	0	623	0.000	0	0.0	0.0	0.000	A
C-D	61	15			61				
C-A	258	65			258				

18:00 - 18:15

Stream	Total Demand (PCU/hr)	Junction Arrivals (PCU)	Capacity (PCU/hr)	RFC	Throughput (PCU/hr)	Start queue (PCU)	End queue (PCU)	Delay (s)	Unsignalised level of service
B-CD	0	0	586	0.000	0	0.0	0.0	0.000	A
B-AD	0	0	507	0.000	0	0.0	0.0	0.000	A
A-BCD	0.85	0.21	628	0.001	0.85	0.0	0.0	6.313	A
A-B	0	0			0				
A-C	70	17			70				
D-ABC	26	6	550	0.047	26	0.1	0.1	7.550	A
C-ABD	0	0	627	0.000	0	0.0	0.0	0.000	A
C-D	51	13			51				
C-A	216	54			216				

Existing Layout - 2024 Base, AM

Data Errors and Warnings

No errors or warnings

Junction Network

Junctions

Junction	Name	Junction type	Major road direction	Use circulating lanes	Junction Delay (s)	Junction LOS
1	untitled	Crossroads	Two-way		1.18	A

Junction Network Options

Driving side	Lighting
Left	Normal/unknown

Traffic Demand

Demand Set Details

ID	Scenario name	Time Period name	Traffic profile type	Start time (HH:mm)	Finish time (HH:mm)	Time segment length (min)	Run automatically
D3	2024 Base	AM	ONE HOUR	07:45	09:15	15	✓

Default vehicle mix	Vehicle mix varies over turn	Vehicle mix varies over entry	Vehicle mix source	PCU Factor for a HV (PCU)
✓	✓	✓	HV Percentages	2.00

Demand overview (Traffic)

Arm	Linked arm	Profile type	Use O-D data	Average Demand (PCU/hr)	Scaling Factor (%)
A		ONE HOUR	✓	96	100.000
B		ONE HOUR	✓	18	100.000
C		ONE HOUR	✓	127	100.000
D		ONE HOUR	✓	28	100.000

Origin-Destination Data

Demand (PCU/hr)

		To			
		A	B	C	D
From	A	0	0	96	0
	B	2	0	16	0
	C	121	0	0	6
	D	1	0	27	0

Vehicle Mix

Heavy Vehicle Percentages

		To			
		A	B	C	D
From	A	10	10	10	10
	B	10	10	10	10
	C	10	10	10	10
	D	10	10	10	10

Results

Results Summary for whole modelled period

Stream	Max RFC	Max Delay (s)	Max Queue (PCU)	Max LOS	Average Demand (PCU/hr)	Total Junction Arrivals (PCU)
B-CD	0.02	5.72	0.0	A	15	22
B-AD	0.00	8.46	0.0	A	2	3
A-BCD	0.00	0.00	0.0	A	0	0
A-B					0	0
A-C					88	132
D-ABC	0.06	7.49	0.1	A	26	39
C-ABD	0.00	0.00	0.0	A	0	0
C-D					6	8
C-A					111	167

Main Results for each time segment

07:45 - 08:00

Stream	Total Demand (PCU/hr)	Junction Arrivals (PCU)	Capacity (PCU/hr)	RFC	Throughput (PCU/hr)	Start queue (PCU)	End queue (PCU)	Delay (s)	Unsignalised level of service
B-CD	12	3	719	0.017	12	0.0	0.0	5.603	A
B-AD	2	0.38	485	0.003	1	0.0	0.0	8.192	A
A-BCD	0	0	621	0.000	0	0.0	0.0	0.000	A
A-B	0	0			0				
A-C	72	18			72				
D-ABC	21	5	578	0.036	21	0.0	0.0	7.108	A
C-ABD	0	0	626	0.000	0	0.0	0.0	0.000	A
C-D	5	1			5				
C-A	91	23			91				

08:00 - 08:15

Stream	Total Demand (PCU/hr)	Junction Arrivals (PCU)	Capacity (PCU/hr)	RFC	Throughput (PCU/hr)	Start queue (PCU)	End queue (PCU)	Delay (s)	Unsignalised level of service
B-CD	14	4	715	0.020	14	0.0	0.0	5.653	A
B-AD	2	0.45	479	0.004	2	0.0	0.0	8.302	A
A-BCD	0	0	617	0.000	0	0.0	0.0	0.000	A
A-B	0	0			0				
A-C	86	22			86				
D-ABC	25	6	570	0.044	25	0.0	0.1	7.266	A
C-ABD	0	0	623	0.000	0	0.0	0.0	0.000	A
C-D	5	1			5				
C-A	109	27			109				

08:15 - 08:30

Stream	Total Demand (PCU/hr)	Junction Arrivals (PCU)	Capacity (PCU/hr)	RFC	Throughput (PCU/hr)	Start queue (PCU)	End queue (PCU)	Delay (s)	Unsignalised level of service
B-CD	18	4	709	0.025	18	0.0	0.0	5.723	A
B-AD	2	0.55	470	0.005	2	0.0	0.0	8.460	A
A-BCD	0	0	611	0.000	0	0.0	0.0	0.000	A
A-B	0	0			0				
A-C	106	26			106				
D-ABC	31	8	559	0.055	31	0.1	0.1	7.491	A
C-ABD	0	0	619	0.000	0	0.0	0.0	0.000	A
C-D	7	2			7				
C-A	133	33			133				

08:30 - 08:45

Stream	Total Demand (PCU/hr)	Junction Arrivals (PCU)	Capacity (PCU/hr)	RFC	Throughput (PCU/hr)	Start queue (PCU)	End queue (PCU)	Delay (s)	Unsignalised level of service
B-CD	18	4	709	0.025	18	0.0	0.0	5.723	A
B-AD	2	0.55	470	0.005	2	0.0	0.0	8.460	A
A-BCD	0	0	611	0.000	0	0.0	0.0	0.000	A
A-B	0	0			0				
A-C	106	26			106				
D-ABC	31	8	559	0.055	31	0.1	0.1	7.492	A
C-ABD	0	0	619	0.000	0	0.0	0.0	0.000	A
C-D	7	2			7				
C-A	133	33			133				

08:45 - 09:00

Stream	Total Demand (PCU/hr)	Junction Arrivals (PCU)	Capacity (PCU/hr)	RFC	Throughput (PCU/hr)	Start queue (PCU)	End queue (PCU)	Delay (s)	Unsignalised level of service
B-CD	14	4	715	0.020	14	0.0	0.0	5.653	A
B-AD	2	0.45	479	0.004	2	0.0	0.0	8.304	A
A-BCD	0	0	617	0.000	0	0.0	0.0	0.000	A
A-B	0	0			0				
A-C	86	22			86				
D-ABC	25	6	570	0.044	25	0.1	0.1	7.267	A
C-ABD	0	0	623	0.000	0	0.0	0.0	0.000	A
C-D	5	1			5				
C-A	109	27			109				

09:00 - 09:15

Stream	Total Demand (PCU/hr)	Junction Arrivals (PCU)	Capacity (PCU/hr)	RFC	Throughput (PCU/hr)	Start queue (PCU)	End queue (PCU)	Delay (s)	Unsignalised level of service
B-CD	12	3	719	0.017	12	0.0	0.0	5.603	A
B-AD	2	0.38	485	0.003	2	0.0	0.0	8.192	A
A-BCD	0	0	621	0.000	0	0.0	0.0	0.000	A
A-B	0	0			0				
A-C	72	18			72				
D-ABC	21	5	578	0.036	21	0.1	0.0	7.115	A
C-ABD	0	0	626	0.000	0	0.0	0.0	0.000	A
C-D	5	1			5				
C-A	91	23			91				

Existing Layout - 2024 Base, PM

Data Errors and Warnings

No errors or warnings

Junction Network

Junctions

Junction	Name	Junction type	Major road direction	Use circulating lanes	Junction Delay (s)	Junction LOS
1	untitled	Crossroads	Two-way		0.60	A

Junction Network Options

Driving side	Lighting
Left	Normal/unknown

Traffic Demand

Demand Set Details

ID	Scenario name	Time Period name	Traffic profile type	Start time (HH:mm)	Finish time (HH:mm)	Time segment length (min)	Run automatically
D4	2024 Base	PM	ONE HOUR	16:45	18:15	15	✓

Default vehicle mix	Vehicle mix varies over turn	Vehicle mix varies over entry	Vehicle mix source	PCU Factor for a HV (PCU)
✓	✓	✓	HV Percentages	2.00

Demand overview (Traffic)

Arm	Linked arm	Profile type	Use O-D data	Average Demand (PCU/hr)	Scaling Factor (%)
A		ONE HOUR	✓	94	100.000
B		ONE HOUR	✓	4	100.000
C		ONE HOUR	✓	355	100.000
D		ONE HOUR	✓	34	100.000

Origin-Destination Data

Demand (PCU/hr)

		To			
		A	B	C	D
From	A	0	0	93	1
	B	0	0	4	0
	C	287	0	0	68
	D	3	0	31	0

Vehicle Mix

Heavy Vehicle Percentages

		To			
		A	B	C	D
From	A	10	10	10	10
	B	10	10	10	10
	C	10	10	10	10
	D	10	10	10	10

Results

Results Summary for whole modelled period

Stream	Max RFC	Max Delay (s)	Max Queue (PCU)	Max LOS	Average Demand (PCU/hr)	Total Junction Arrivals (PCU)
B-CD	0.00	0.00	0.0	A	0	0
B-AD	0.00	0.00	0.0	A	0	0
A-BCD	0.00	6.38	0.0	A	1	2
A-B					0	0
A-C					85	128
D-ABC	0.07	8.28	0.1	A	31	47
C-ABD	0.00	0.00	0.0	A	0	0
C-D					62	94
C-A					263	395

Main Results for each time segment

16:45 - 17:00

Stream	Total Demand (PCU/hr)	Junction Arrivals (PCU)	Capacity (PCU/hr)	RFC	Throughput (PCU/hr)	Start queue (PCU)	End queue (PCU)	Delay (s)	Unsignalised level of service
B-CD	0	0	586	0.000	0	0.0	0.0	0.000	A
B-AD	0	0	507	0.000	0	0.0	0.0	0.000	A
A-BCD	0.85	0.21	628	0.001	0.84	0.0	0.0	6.313	A
A-B	0	0			0				
A-C	70	17			70				
D-ABC	26	6	550	0.047	25	0.0	0.1	7.543	A
C-ABD	0	0	627	0.000	0	0.0	0.0	0.000	A
C-D	51	13			51				
C-A	216	54			216				

17:00 - 17:15

Stream	Total Demand (PCU/hr)	Junction Arrivals (PCU)	Capacity (PCU/hr)	RFC	Throughput (PCU/hr)	Start queue (PCU)	End queue (PCU)	Delay (s)	Unsignalised level of service
B-CD	0	0	577	0.000	0	0.0	0.0	0.000	A
B-AD	0	0	496	0.000	0	0.0	0.0	0.000	A
A-BCD	1	0.26	626	0.002	1	0.0	0.0	6.339	A
A-B	0	0			0				
A-C	83	21			83				
D-ABC	31	8	536	0.057	31	0.1	0.1	7.840	A
C-ABD	0	0	623	0.000	0	0.0	0.0	0.000	A
C-D	61	15			61				
C-A	258	65			258				

17:15 - 17:30

Stream	Total Demand (PCU/hr)	Junction Arrivals (PCU)	Capacity (PCU/hr)	RFC	Throughput (PCU/hr)	Start queue (PCU)	End queue (PCU)	Delay (s)	Unsignalised level of service
B-CD	0	0	564	0.000	0	0.0	0.0	0.000	A
B-AD	0	0	481	0.000	0	0.0	0.0	0.000	A
A-BCD	1	0.33	623	0.002	1	0.0	0.0	6.373	A
A-B	0	0			0				
A-C	102	26			102				
D-ABC	37	9	515	0.073	37	0.1	0.1	8.283	A
C-ABD	0	0	619	0.000	0	0.0	0.0	0.000	A
C-D	75	19			75				
C-A	316	79			316				

17:30 - 17:45

Stream	Total Demand (PCU/hr)	Junction Arrivals (PCU)	Capacity (PCU/hr)	RFC	Throughput (PCU/hr)	Start queue (PCU)	End queue (PCU)	Delay (s)	Unsignalised level of service
B-CD	0	0	564	0.000	0	0.0	0.0	0.000	A
B-AD	0	0	481	0.000	0	0.0	0.0	0.000	A
A-BCD	1	0.33	623	0.002	1	0.0	0.0	6.376	A
A-B	0	0			0				
A-C	102	26			102				
D-ABC	37	9	515	0.073	37	0.1	0.1	8.284	A
C-ABD	0	0	619	0.000	0	0.0	0.0	0.000	A
C-D	75	19			75				
C-A	316	79			316				

17:45 - 18:00

Stream	Total Demand (PCU/hr)	Junction Arrivals (PCU)	Capacity (PCU/hr)	RFC	Throughput (PCU/hr)	Start queue (PCU)	End queue (PCU)	Delay (s)	Unsignalised level of service
B-CD	0	0	577	0.000	0	0.0	0.0	0.000	A
B-AD	0	0	496	0.000	0	0.0	0.0	0.000	A
A-BCD	1	0.26	626	0.002	1	0.0	0.0	6.339	A
A-B	0	0			0				
A-C	83	21			83				
D-ABC	31	8	536	0.057	31	0.1	0.1	7.844	A
C-ABD	0	0	623	0.000	0	0.0	0.0	0.000	A
C-D	61	15			61				
C-A	258	65			258				

18:00 - 18:15

Stream	Total Demand (PCU/hr)	Junction Arrivals (PCU)	Capacity (PCU/hr)	RFC	Throughput (PCU/hr)	Start queue (PCU)	End queue (PCU)	Delay (s)	Unsignalised level of service
B-CD	0	0	586	0.000	0	0.0	0.0	0.000	A
B-AD	0	0	507	0.000	0	0.0	0.0	0.000	A
A-BCD	0.85	0.21	628	0.001	0.85	0.0	0.0	6.313	A
A-B	0	0			0				
A-C	70	17			70				
D-ABC	26	6	550	0.047	26	0.1	0.1	7.550	A
C-ABD	0	0	627	0.000	0	0.0	0.0	0.000	A
C-D	51	13			51				
C-A	216	54			216				

Existing Layout - 2028 Base, AM

Data Errors and Warnings

No errors or warnings

Junction Network

Junctions

Junction	Name	Junction type	Major road direction	Use circulating lanes	Junction Delay (s)	Junction LOS
1	untitled	Crossroads	Two-way		1.18	A

Junction Network Options

Driving side	Lighting
Left	Normal/unknown

Traffic Demand

Demand Set Details

ID	Scenario name	Time Period name	Traffic profile type	Start time (HH:mm)	Finish time (HH:mm)	Time segment length (min)	Run automatically
D5	2028 Base	AM	ONE HOUR	07:45	09:15	15	✓

Default vehicle mix	Vehicle mix varies over turn	Vehicle mix varies over entry	Vehicle mix source	PCU Factor for a HV (PCU)
✓	✓	✓	HV Percentages	2.00

Demand overview (Traffic)

Arm	Linked arm	Profile type	Use O-D data	Average Demand (PCU/hr)	Scaling Factor (%)
A		ONE HOUR	✓	96	100.000
B		ONE HOUR	✓	18	100.000
C		ONE HOUR	✓	127	100.000
D		ONE HOUR	✓	28	100.000

Origin-Destination Data

Demand (PCU/hr)

		To			
		A	B	C	D
From	A	0	0	96	0
	B	2	0	16	0
	C	121	0	0	6
	D	1	0	27	0

Vehicle Mix

Heavy Vehicle Percentages

		To			
		A	B	C	D
From	A	10	10	10	10
	B	10	10	10	10
	C	10	10	10	10
	D	10	10	10	10

Results

Results Summary for whole modelled period

Stream	Max RFC	Max Delay (s)	Max Queue (PCU)	Max LOS	Average Demand (PCU/hr)	Total Junction Arrivals (PCU)
B-CD	0.02	5.72	0.0	A	15	22
B-AD	0.00	8.46	0.0	A	2	3
A-BCD	0.00	0.00	0.0	A	0	0
A-B					0	0
A-C					88	132
D-ABC	0.06	7.49	0.1	A	26	39
C-ABD	0.00	0.00	0.0	A	0	0
C-D					6	8
C-A					111	167

Main Results for each time segment

07:45 - 08:00

Stream	Total Demand (PCU/hr)	Junction Arrivals (PCU)	Capacity (PCU/hr)	RFC	Throughput (PCU/hr)	Start queue (PCU)	End queue (PCU)	Delay (s)	Unsignalised level of service
B-CD	12	3	719	0.017	12	0.0	0.0	5.603	A
B-AD	2	0.38	485	0.003	1	0.0	0.0	8.192	A
A-BCD	0	0	621	0.000	0	0.0	0.0	0.000	A
A-B	0	0			0				
A-C	72	18			72				
D-ABC	21	5	578	0.036	21	0.0	0.0	7.108	A
C-ABD	0	0	626	0.000	0	0.0	0.0	0.000	A
C-D	5	1			5				
C-A	91	23			91				

08:00 - 08:15

Stream	Total Demand (PCU/hr)	Junction Arrivals (PCU)	Capacity (PCU/hr)	RFC	Throughput (PCU/hr)	Start queue (PCU)	End queue (PCU)	Delay (s)	Unsignalised level of service
B-CD	14	4	715	0.020	14	0.0	0.0	5.653	A
B-AD	2	0.45	479	0.004	2	0.0	0.0	8.302	A
A-BCD	0	0	617	0.000	0	0.0	0.0	0.000	A
A-B	0	0			0				
A-C	86	22			86				
D-ABC	25	6	570	0.044	25	0.0	0.1	7.266	A
C-ABD	0	0	623	0.000	0	0.0	0.0	0.000	A
C-D	5	1			5				
C-A	109	27			109				

08:15 - 08:30

Stream	Total Demand (PCU/hr)	Junction Arrivals (PCU)	Capacity (PCU/hr)	RFC	Throughput (PCU/hr)	Start queue (PCU)	End queue (PCU)	Delay (s)	Unsignalised level of service
B-CD	18	4	709	0.025	18	0.0	0.0	5.723	A
B-AD	2	0.55	470	0.005	2	0.0	0.0	8.460	A
A-BCD	0	0	611	0.000	0	0.0	0.0	0.000	A
A-B	0	0			0				
A-C	106	26			106				
D-ABC	31	8	559	0.055	31	0.1	0.1	7.491	A
C-ABD	0	0	619	0.000	0	0.0	0.0	0.000	A
C-D	7	2			7				
C-A	133	33			133				

08:30 - 08:45

Stream	Total Demand (PCU/hr)	Junction Arrivals (PCU)	Capacity (PCU/hr)	RFC	Throughput (PCU/hr)	Start queue (PCU)	End queue (PCU)	Delay (s)	Unsignalised level of service
B-CD	18	4	709	0.025	18	0.0	0.0	5.723	A
B-AD	2	0.55	470	0.005	2	0.0	0.0	8.460	A
A-BCD	0	0	611	0.000	0	0.0	0.0	0.000	A
A-B	0	0			0				
A-C	106	26			106				
D-ABC	31	8	559	0.055	31	0.1	0.1	7.492	A
C-ABD	0	0	619	0.000	0	0.0	0.0	0.000	A
C-D	7	2			7				
C-A	133	33			133				

08:45 - 09:00

Stream	Total Demand (PCU/hr)	Junction Arrivals (PCU)	Capacity (PCU/hr)	RFC	Throughput (PCU/hr)	Start queue (PCU)	End queue (PCU)	Delay (s)	Unsignalised level of service
B-CD	14	4	715	0.020	14	0.0	0.0	5.653	A
B-AD	2	0.45	479	0.004	2	0.0	0.0	8.304	A
A-BCD	0	0	617	0.000	0	0.0	0.0	0.000	A
A-B	0	0			0				
A-C	86	22			86				
D-ABC	25	6	570	0.044	25	0.1	0.1	7.267	A
C-ABD	0	0	623	0.000	0	0.0	0.0	0.000	A
C-D	5	1			5				
C-A	109	27			109				

09:00 - 09:15

Stream	Total Demand (PCU/hr)	Junction Arrivals (PCU)	Capacity (PCU/hr)	RFC	Throughput (PCU/hr)	Start queue (PCU)	End queue (PCU)	Delay (s)	Unsignalised level of service
B-CD	12	3	719	0.017	12	0.0	0.0	5.603	A
B-AD	2	0.38	485	0.003	2	0.0	0.0	8.192	A
A-BCD	0	0	621	0.000	0	0.0	0.0	0.000	A
A-B	0	0			0				
A-C	72	18			72				
D-ABC	21	5	578	0.036	21	0.1	0.0	7.115	A
C-ABD	0	0	626	0.000	0	0.0	0.0	0.000	A
C-D	5	1			5				
C-A	91	23			91				

Existing Layout - 2028 Base, PM

Data Errors and Warnings

No errors or warnings

Junction Network

Junctions

Junction	Name	Junction type	Major road direction	Use circulating lanes	Junction Delay (s)	Junction LOS
1	untitled	Crossroads	Two-way		0.60	A

Junction Network Options

Driving side	Lighting
Left	Normal/unknown

Traffic Demand

Demand Set Details

ID	Scenario name	Time Period name	Traffic profile type	Start time (HH:mm)	Finish time (HH:mm)	Time segment length (min)	Run automatically
D6	2028 Base	PM	ONE HOUR	16:45	18:15	15	✓

Default vehicle mix	Vehicle mix varies over turn	Vehicle mix varies over entry	Vehicle mix source	PCU Factor for a HV (PCU)
✓	✓	✓	HV Percentages	2.00

Demand overview (Traffic)

Arm	Linked arm	Profile type	Use O-D data	Average Demand (PCU/hr)	Scaling Factor (%)
A		ONE HOUR	✓	94	100.000
B		ONE HOUR	✓	4	100.000
C		ONE HOUR	✓	355	100.000
D		ONE HOUR	✓	34	100.000

Origin-Destination Data

Demand (PCU/hr)

		To			
		A	B	C	D
From	A	0	0	93	1
	B	0	0	4	0
	C	287	0	0	68
	D	3	0	31	0

Vehicle Mix

Heavy Vehicle Percentages

		To			
		A	B	C	D
From	A	10	10	10	10
	B	10	10	10	10
	C	10	10	10	10
	D	10	10	10	10

Results

Results Summary for whole modelled period

Stream	Max RFC	Max Delay (s)	Max Queue (PCU)	Max LOS	Average Demand (PCU/hr)	Total Junction Arrivals (PCU)
B-CD	0.00	0.00	0.0	A	0	0
B-AD	0.00	0.00	0.0	A	0	0
A-BCD	0.00	6.38	0.0	A	1	2
A-B					0	0
A-C					85	128
D-ABC	0.07	8.28	0.1	A	31	47
C-ABD	0.00	0.00	0.0	A	0	0
C-D					62	94
C-A					263	395

Main Results for each time segment

16:45 - 17:00

Stream	Total Demand (PCU/hr)	Junction Arrivals (PCU)	Capacity (PCU/hr)	RFC	Throughput (PCU/hr)	Start queue (PCU)	End queue (PCU)	Delay (s)	Unsignalised level of service
B-CD	0	0	586	0.000	0	0.0	0.0	0.000	A
B-AD	0	0	507	0.000	0	0.0	0.0	0.000	A
A-BCD	0.85	0.21	628	0.001	0.84	0.0	0.0	6.313	A
A-B	0	0			0				
A-C	70	17			70				
D-ABC	26	6	550	0.047	25	0.0	0.1	7.543	A
C-ABD	0	0	627	0.000	0	0.0	0.0	0.000	A
C-D	51	13			51				
C-A	216	54			216				

17:00 - 17:15

Stream	Total Demand (PCU/hr)	Junction Arrivals (PCU)	Capacity (PCU/hr)	RFC	Throughput (PCU/hr)	Start queue (PCU)	End queue (PCU)	Delay (s)	Unsignalised level of service
B-CD	0	0	577	0.000	0	0.0	0.0	0.000	A
B-AD	0	0	496	0.000	0	0.0	0.0	0.000	A
A-BCD	1	0.26	626	0.002	1	0.0	0.0	6.339	A
A-B	0	0			0				
A-C	83	21			83				
D-ABC	31	8	536	0.057	31	0.1	0.1	7.840	A
C-ABD	0	0	623	0.000	0	0.0	0.0	0.000	A
C-D	61	15			61				
C-A	258	65			258				

17:15 - 17:30

Stream	Total Demand (PCU/hr)	Junction Arrivals (PCU)	Capacity (PCU/hr)	RFC	Throughput (PCU/hr)	Start queue (PCU)	End queue (PCU)	Delay (s)	Unsignalised level of service
B-CD	0	0	564	0.000	0	0.0	0.0	0.000	A
B-AD	0	0	481	0.000	0	0.0	0.0	0.000	A
A-BCD	1	0.33	623	0.002	1	0.0	0.0	6.373	A
A-B	0	0			0				
A-C	102	26			102				
D-ABC	37	9	515	0.073	37	0.1	0.1	8.283	A
C-ABD	0	0	619	0.000	0	0.0	0.0	0.000	A
C-D	75	19			75				
C-A	316	79			316				

17:30 - 17:45

Stream	Total Demand (PCU/hr)	Junction Arrivals (PCU)	Capacity (PCU/hr)	RFC	Throughput (PCU/hr)	Start queue (PCU)	End queue (PCU)	Delay (s)	Unsignalised level of service
B-CD	0	0	564	0.000	0	0.0	0.0	0.000	A
B-AD	0	0	481	0.000	0	0.0	0.0	0.000	A
A-BCD	1	0.33	623	0.002	1	0.0	0.0	6.376	A
A-B	0	0			0				
A-C	102	26			102				
D-ABC	37	9	515	0.073	37	0.1	0.1	8.284	A
C-ABD	0	0	619	0.000	0	0.0	0.0	0.000	A
C-D	75	19			75				
C-A	316	79			316				

17:45 - 18:00

Stream	Total Demand (PCU/hr)	Junction Arrivals (PCU)	Capacity (PCU/hr)	RFC	Throughput (PCU/hr)	Start queue (PCU)	End queue (PCU)	Delay (s)	Unsignalised level of service
B-CD	0	0	577	0.000	0	0.0	0.0	0.000	A
B-AD	0	0	496	0.000	0	0.0	0.0	0.000	A
A-BCD	1	0.26	626	0.002	1	0.0	0.0	6.339	A
A-B	0	0			0				
A-C	83	21			83				
D-ABC	31	8	536	0.057	31	0.1	0.1	7.844	A
C-ABD	0	0	623	0.000	0	0.0	0.0	0.000	A
C-D	61	15			61				
C-A	258	65			258				

18:00 - 18:15

Stream	Total Demand (PCU/hr)	Junction Arrivals (PCU)	Capacity (PCU/hr)	RFC	Throughput (PCU/hr)	Start queue (PCU)	End queue (PCU)	Delay (s)	Unsignalised level of service
B-CD	0	0	586	0.000	0	0.0	0.0	0.000	A
B-AD	0	0	507	0.000	0	0.0	0.0	0.000	A
A-BCD	0.85	0.21	628	0.001	0.85	0.0	0.0	6.313	A
A-B	0	0			0				
A-C	70	17			70				
D-ABC	26	6	550	0.047	26	0.1	0.1	7.550	A
C-ABD	0	0	627	0.000	0	0.0	0.0	0.000	A
C-D	51	13			51				
C-A	216	54			216				

Existing Layout - 2024 Base + Development, AM

Data Errors and Warnings

No errors or warnings

Junction Network

Junctions

Junction	Name	Junction type	Major road direction	Use circulating lanes	Junction Delay (s)	Junction LOS
1	untitled	Crossroads	Two-way		3.23	A

Junction Network Options

Driving side	Lighting
Left	Normal/unknown

Traffic Demand

Demand Set Details

ID	Scenario name	Time Period name	Traffic profile type	Start time (HH:mm)	Finish time (HH:mm)	Time segment length (min)	Run automatically
D7	2024 Base + Development	AM	ONE HOUR	07:45	09:15	15	✓

Default vehicle mix	Vehicle mix varies over turn	Vehicle mix varies over entry	Vehicle mix source	PCU Factor for a HV (PCU)
✓	✓	✓	HV Percentages	2.00

Demand overview (Traffic)

Arm	Linked arm	Profile type	Use O-D data	Average Demand (PCU/hr)	Scaling Factor (%)
A		ONE HOUR	✓	96	100.000
B		ONE HOUR	✓	18	100.000
C		ONE HOUR	✓	214	100.000
D		ONE HOUR	✓	136	100.000

Origin-Destination Data

Demand (PCU/hr)

		To			
		A	B	C	D
From	A	0	0	85	11
	B	2	0	16	0
	C	107	0	0	107
	D	15	0	121	0

Vehicle Mix

Heavy Vehicle Percentages

		To			
		A	B	C	D
From	A	10	10	10	10
	B	10	10	10	10
	C	10	10	10	10
	D	10	10	10	10

Results

Results Summary for whole modelled period

Stream	Max RFC	Max Delay (s)	Max Queue (PCU)	Max LOS	Average Demand (PCU/hr)	Total Junction Arrivals (PCU)
B-CD	0.02	5.70	0.0	A	15	22
B-AD	0.00	8.70	0.0	A	2	3
A-BCD	0.02	6.22	0.0	A	12	17
A-B					0	0
A-C					77	115
D-ABC	0.27	9.65	0.4	A	125	187
C-ABD	0.00	0.00	0.0	A	0	0
C-D					98	147
C-A					98	147

Main Results for each time segment

07:45 - 08:00

Stream	Total Demand (PCU/hr)	Junction Arrivals (PCU)	Capacity (PCU/hr)	RFC	Throughput (PCU/hr)	Start queue (PCU)	End queue (PCU)	Delay (s)	Unsignalised level of service
B-CD	12	3	721	0.017	12	0.0	0.0	5.585	A
B-AD	2	0.38	476	0.003	1	0.0	0.0	8.344	A
A-BCD	9	2	648	0.014	9	0.0	0.0	6.197	A
A-B	0	0			0				
A-C	63	16			63				
D-ABC	102	26	582	0.176	101	0.0	0.2	8.232	A
C-ABD	0	0	626	0.000	0	0.0	0.0	0.000	A
C-D	80	20			80				
C-A	81	20			81				

08:00 - 08:15

Stream	Total Demand (PCU/hr)	Junction Arrivals (PCU)	Capacity (PCU/hr)	RFC	Throughput (PCU/hr)	Start queue (PCU)	End queue (PCU)	Delay (s)	Unsignalised level of service
B-CD	14	4	717	0.020	14	0.0	0.0	5.631	A
B-AD	2	0.45	468	0.004	2	0.0	0.0	8.492	A
A-BCD	11	3	649	0.017	11	0.0	0.0	6.205	A
A-B	0	0			0				
A-C	75	19			75				
D-ABC	122	31	572	0.213	122	0.2	0.3	8.785	A
C-ABD	0	0	622	0.000	0	0.0	0.0	0.000	A
C-D	96	24			96				
C-A	96	24			96				

08:15 - 08:30

Stream	Total Demand (PCU/hr)	Junction Arrivals (PCU)	Capacity (PCU/hr)	RFC	Throughput (PCU/hr)	Start queue (PCU)	End queue (PCU)	Delay (s)	Unsignalised level of service
B-CD	18	4	713	0.025	18	0.0	0.0	5.697	A
B-AD	2	0.55	457	0.005	2	0.0	0.0	8.702	A
A-BCD	14	4	651	0.022	14	0.0	0.0	6.216	A
A-B	0	0			0				
A-C	92	23			92				
D-ABC	150	37	560	0.267	149	0.3	0.4	9.631	A
C-ABD	0	0	617	0.000	0	0.0	0.0	0.000	A
C-D	118	29			118				
C-A	118	29			118				

08:30 - 08:45

Stream	Total Demand (PCU/hr)	Junction Arrivals (PCU)	Capacity (PCU/hr)	RFC	Throughput (PCU/hr)	Start queue (PCU)	End queue (PCU)	Delay (s)	Unsignalised level of service
B-CD	18	4	713	0.025	18	0.0	0.0	5.697	A
B-AD	2	0.55	457	0.005	2	0.0	0.0	8.703	A
A-BCD	14	4	651	0.022	14	0.0	0.0	6.216	A
A-B	0	0			0				
A-C	92	23			92				
D-ABC	150	37	560	0.267	150	0.4	0.4	9.651	A
C-ABD	0	0	617	0.000	0	0.0	0.0	0.000	A
C-D	118	29			118				
C-A	118	29			118				

08:45 - 09:00

Stream	Total Demand (PCU/hr)	Junction Arrivals (PCU)	Capacity (PCU/hr)	RFC	Throughput (PCU/hr)	Start queue (PCU)	End queue (PCU)	Delay (s)	Unsignalised level of service
B-CD	14	4	717	0.020	14	0.0	0.0	5.632	A
B-AD	2	0.45	468	0.004	2	0.0	0.0	8.493	A
A-BCD	11	3	649	0.017	11	0.0	0.0	6.206	A
A-B	0	0			0				
A-C	75	19			75				
D-ABC	122	31	572	0.213	123	0.4	0.3	8.811	A
C-ABD	0	0	622	0.000	0	0.0	0.0	0.000	A
C-D	96	24			96				
C-A	96	24			96				

09:00 - 09:15

Stream	Total Demand (PCU/hr)	Junction Arrivals (PCU)	Capacity (PCU/hr)	RFC	Throughput (PCU/hr)	Start queue (PCU)	End queue (PCU)	Delay (s)	Unsignalised level of service
B-CD	12	3	721	0.017	12	0.0	0.0	5.588	A
B-AD	2	0.38	476	0.003	2	0.0	0.0	8.349	A
A-BCD	9	2	648	0.014	9	0.0	0.0	6.198	A
A-B	0	0			0				
A-C	63	16			63				
D-ABC	102	26	581	0.176	103	0.3	0.2	8.273	A
C-ABD	0	0	626	0.000	0	0.0	0.0	0.000	A
C-D	80	20			80				
C-A	81	20			81				

Existing Layout - 2024 Base + Development, PM

Data Errors and Warnings

No errors or warnings

Junction Network

Junctions

Junction	Name	Junction type	Major road direction	Use circulating lanes	Junction Delay (s)	Junction LOS
1	untitled	Crossroads	Two-way		2.40	A

Junction Network Options

Driving side	Lighting
Left	Normal/unknown

Traffic Demand

Demand Set Details

ID	Scenario name	Time Period name	Traffic profile type	Start time (HH:mm)	Finish time (HH:mm)	Time segment length (min)	Run automatically
D8	2024 Base + Development	PM	ONE HOUR	16:45	18:15	15	✓

Default vehicle mix	Vehicle mix varies over turn	Vehicle mix varies over entry	Vehicle mix source	PCU Factor for a HV (PCU)
✓	✓	✓	HV Percentages	2.00

Demand overview (Traffic)

Arm	Linked arm	Profile type	Use O-D data	Average Demand (PCU/hr)	Scaling Factor (%)
A		ONE HOUR	✓	94	100.000
B		ONE HOUR	✓	4	100.000
C		ONE HOUR	✓	436	100.000
D		ONE HOUR	✓	142	100.000

Origin-Destination Data

Demand (PCU/hr)

		To			
		A	B	C	D
From	A	0	0	88	6
	B	0	0	4	0
	C	269	0	0	167
	D	22	0	120	0

Vehicle Mix

Heavy Vehicle Percentages

		To			
		A	B	C	D
From	A	10	10	10	10
	B	10	10	10	10
	C	10	10	10	10
	D	10	10	10	10

Results

Results Summary for whole modelled period

Stream	Max RFC	Max Delay (s)	Max Queue (PCU)	Max LOS	Average Demand (PCU/hr)	Total Junction Arrivals (PCU)
B-CD	0.00	0.00	0.0	A	0	0
B-AD	0.00	0.00	0.0	A	0	0
A-BCD	0.01	6.70	0.0	A	6	10
A-B					0	0
A-C					80	120
D-ABC	0.30	10.99	0.5	B	131	196
C-ABD	0.00	0.00	0.0	A	0	0
C-D					153	230
C-A					247	370

Main Results for each time segment

16:45 - 17:00

Stream	Total Demand (PCU/hr)	Junction Arrivals (PCU)	Capacity (PCU/hr)	RFC	Throughput (PCU/hr)	Start queue (PCU)	End queue (PCU)	Delay (s)	Unsignalised level of service
B-CD	0	0	579	0.000	0	0.0	0.0	0.000	A
B-AD	0	0	498	0.000	0	0.0	0.0	0.000	A
A-BCD	5	1	612	0.008	5	0.0	0.0	6.527	A
A-B	0	0			0				
A-C	66	16			66				
D-ABC	107	27	554	0.194	106	0.0	0.3	8.819	A
C-ABD	0	0	626	0.000	0	0.0	0.0	0.000	A
C-D	126	31			126				
C-A	203	51			203				

17:00 - 17:15

Stream	Total Demand (PCU/hr)	Junction Arrivals (PCU)	Capacity (PCU/hr)	RFC	Throughput (PCU/hr)	Start queue (PCU)	End queue (PCU)	Delay (s)	Unsignalised level of service
B-CD	0	0	569	0.000	0	0.0	0.0	0.000	A
B-AD	0	0	485	0.000	0	0.0	0.0	0.000	A
A-BCD	6	2	606	0.010	6	0.0	0.0	6.600	A
A-B	0	0			0				
A-C	78	20			78				
D-ABC	128	32	539	0.238	128	0.3	0.3	9.636	A
C-ABD	0	0	623	0.000	0	0.0	0.0	0.000	A
C-D	150	38			150				
C-A	242	60			242				

17:15 - 17:30

Stream	Total Demand (PCU/hr)	Junction Arrivals (PCU)	Capacity (PCU/hr)	RFC	Throughput (PCU/hr)	Start queue (PCU)	End queue (PCU)	Delay (s)	Unsignalised level of service
B-CD	0	0	555	0.000	0	0.0	0.0	0.000	A
B-AD	0	0	467	0.000	0	0.0	0.0	0.000	A
A-BCD	8	2	599	0.013	8	0.0	0.0	6.700	A
A-B	0	0			0				
A-C	96	24			96				
D-ABC	157	39	517	0.303	156	0.3	0.5	10.955	B
C-ABD	0	0	618	0.000	0	0.0	0.0	0.000	A
C-D	184	46			184				
C-A	296	74			296				

17:30 - 17:45

Stream	Total Demand (PCU/hr)	Junction Arrivals (PCU)	Capacity (PCU/hr)	RFC	Throughput (PCU/hr)	Start queue (PCU)	End queue (PCU)	Delay (s)	Unsignalised level of service
B-CD	0	0	555	0.000	0	0.0	0.0	0.000	A
B-AD	0	0	467	0.000	0	0.0	0.0	0.000	A
A-BCD	8	2	599	0.013	8	0.0	0.0	6.703	A
A-B	0	0			0				
A-C	96	24			96				
D-ABC	157	39	517	0.303	157	0.5	0.5	10.988	B
C-ABD	0	0	618	0.000	0	0.0	0.0	0.000	A
C-D	184	46			184				
C-A	296	74			296				

17:45 - 18:00

Stream	Total Demand (PCU/hr)	Junction Arrivals (PCU)	Capacity (PCU/hr)	RFC	Throughput (PCU/hr)	Start queue (PCU)	End queue (PCU)	Delay (s)	Unsignalised level of service
B-CD	0	0	569	0.000	0	0.0	0.0	0.000	A
B-AD	0	0	485	0.000	0	0.0	0.0	0.000	A
A-BCD	6	2	606	0.010	6	0.0	0.0	6.600	A
A-B	0	0			0				
A-C	78	20			78				
D-ABC	128	32	539	0.238	129	0.5	0.3	9.669	A
C-ABD	0	0	623	0.000	0	0.0	0.0	0.000	A
C-D	150	38			150				
C-A	242	60			242				

18:00 - 18:15

Stream	Total Demand (PCU/hr)	Junction Arrivals (PCU)	Capacity (PCU/hr)	RFC	Throughput (PCU/hr)	Start queue (PCU)	End queue (PCU)	Delay (s)	Unsignalised level of service
B-CD	0	0	579	0.000	0	0.0	0.0	0.000	A
B-AD	0	0	497	0.000	0	0.0	0.0	0.000	A
A-BCD	5	1	612	0.008	5	0.0	0.0	6.528	A
A-B	0	0			0				
A-C	66	16			66				
D-ABC	107	27	554	0.194	108	0.3	0.3	8.873	A
C-ABD	0	0	626	0.000	0	0.0	0.0	0.000	A
C-D	126	31			126				
C-A	203	51			203				

Existing Layout - 2028 Base + Development, AM

Data Errors and Warnings

No errors or warnings

Junction Network

Junctions

Junction	Name	Junction type	Major road direction	Use circulating lanes	Junction Delay (s)	Junction LOS
1	untitled	Crossroads	Two-way		3.23	A

Junction Network Options

Driving side	Lighting
Left	Normal/unknown

Traffic Demand

Demand Set Details

ID	Scenario name	Time Period name	Traffic profile type	Start time (HH:mm)	Finish time (HH:mm)	Time segment length (min)	Run automatically
D9	2028 Base + Development	AM	ONE HOUR	07:45	09:15	15	✓

Default vehicle mix	Vehicle mix varies over turn	Vehicle mix varies over entry	Vehicle mix source	PCU Factor for a HV (PCU)
✓	✓	✓	HV Percentages	2.00

Demand overview (Traffic)

Arm	Linked arm	Profile type	Use O-D data	Average Demand (PCU/hr)	Scaling Factor (%)
A		ONE HOUR	✓	96	100.000
B		ONE HOUR	✓	18	100.000
C		ONE HOUR	✓	214	100.000
D		ONE HOUR	✓	136	100.000

Origin-Destination Data

Demand (PCU/hr)

		To			
		A	B	C	D
From	A	0	0	85	11
	B	2	0	16	0
	C	107	0	0	107
	D	15	0	121	0

Vehicle Mix

Heavy Vehicle Percentages

		To			
		A	B	C	D
From	A	10	10	10	10
	B	10	10	10	10
	C	10	10	10	10
	D	10	10	10	10

Results

Results Summary for whole modelled period

Stream	Max RFC	Max Delay (s)	Max Queue (PCU)	Max LOS	Average Demand (PCU/hr)	Total Junction Arrivals (PCU)
B-CD	0.02	5.70	0.0	A	15	22
B-AD	0.00	8.70	0.0	A	2	3
A-BCD	0.02	6.22	0.0	A	12	17
A-B					0	0
A-C					77	115
D-ABC	0.27	9.65	0.4	A	125	187
C-ABD	0.00	0.00	0.0	A	0	0
C-D					98	147
C-A					98	147

Main Results for each time segment

07:45 - 08:00

Stream	Total Demand (PCU/hr)	Junction Arrivals (PCU)	Capacity (PCU/hr)	RFC	Throughput (PCU/hr)	Start queue (PCU)	End queue (PCU)	Delay (s)	Unsignalised level of service
B-CD	12	3	721	0.017	12	0.0	0.0	5.585	A
B-AD	2	0.38	476	0.003	1	0.0	0.0	8.344	A
A-BCD	9	2	648	0.014	9	0.0	0.0	6.197	A
A-B	0	0			0				
A-C	63	16			63				
D-ABC	102	26	582	0.176	101	0.0	0.2	8.232	A
C-ABD	0	0	626	0.000	0	0.0	0.0	0.000	A
C-D	80	20			80				
C-A	81	20			81				

08:00 - 08:15

Stream	Total Demand (PCU/hr)	Junction Arrivals (PCU)	Capacity (PCU/hr)	RFC	Throughput (PCU/hr)	Start queue (PCU)	End queue (PCU)	Delay (s)	Unsignalised level of service
B-CD	14	4	717	0.020	14	0.0	0.0	5.631	A
B-AD	2	0.45	468	0.004	2	0.0	0.0	8.492	A
A-BCD	11	3	649	0.017	11	0.0	0.0	6.205	A
A-B	0	0			0				
A-C	75	19			75				
D-ABC	122	31	572	0.213	122	0.2	0.3	8.785	A
C-ABD	0	0	622	0.000	0	0.0	0.0	0.000	A
C-D	96	24			96				
C-A	96	24			96				

08:15 - 08:30

Stream	Total Demand (PCU/hr)	Junction Arrivals (PCU)	Capacity (PCU/hr)	RFC	Throughput (PCU/hr)	Start queue (PCU)	End queue (PCU)	Delay (s)	Unsignalised level of service
B-CD	18	4	713	0.025	18	0.0	0.0	5.697	A
B-AD	2	0.55	457	0.005	2	0.0	0.0	8.702	A
A-BCD	14	4	651	0.022	14	0.0	0.0	6.216	A
A-B	0	0			0				
A-C	92	23			92				
D-ABC	150	37	560	0.267	149	0.3	0.4	9.631	A
C-ABD	0	0	617	0.000	0	0.0	0.0	0.000	A
C-D	118	29			118				
C-A	118	29			118				

08:30 - 08:45

Stream	Total Demand (PCU/hr)	Junction Arrivals (PCU)	Capacity (PCU/hr)	RFC	Throughput (PCU/hr)	Start queue (PCU)	End queue (PCU)	Delay (s)	Unsignalised level of service
B-CD	18	4	713	0.025	18	0.0	0.0	5.697	A
B-AD	2	0.55	457	0.005	2	0.0	0.0	8.703	A
A-BCD	14	4	651	0.022	14	0.0	0.0	6.216	A
A-B	0	0			0				
A-C	92	23			92				
D-ABC	150	37	560	0.267	150	0.4	0.4	9.651	A
C-ABD	0	0	617	0.000	0	0.0	0.0	0.000	A
C-D	118	29			118				
C-A	118	29			118				

08:45 - 09:00

Stream	Total Demand (PCU/hr)	Junction Arrivals (PCU)	Capacity (PCU/hr)	RFC	Throughput (PCU/hr)	Start queue (PCU)	End queue (PCU)	Delay (s)	Unsignalised level of service
B-CD	14	4	717	0.020	14	0.0	0.0	5.632	A
B-AD	2	0.45	468	0.004	2	0.0	0.0	8.493	A
A-BCD	11	3	649	0.017	11	0.0	0.0	6.206	A
A-B	0	0			0				
A-C	75	19			75				
D-ABC	122	31	572	0.213	123	0.4	0.3	8.811	A
C-ABD	0	0	622	0.000	0	0.0	0.0	0.000	A
C-D	96	24			96				
C-A	96	24			96				

09:00 - 09:15

Stream	Total Demand (PCU/hr)	Junction Arrivals (PCU)	Capacity (PCU/hr)	RFC	Throughput (PCU/hr)	Start queue (PCU)	End queue (PCU)	Delay (s)	Unsignalised level of service
B-CD	12	3	721	0.017	12	0.0	0.0	5.588	A
B-AD	2	0.38	476	0.003	2	0.0	0.0	8.349	A
A-BCD	9	2	648	0.014	9	0.0	0.0	6.198	A
A-B	0	0			0				
A-C	63	16			63				
D-ABC	102	26	581	0.176	103	0.3	0.2	8.273	A
C-ABD	0	0	626	0.000	0	0.0	0.0	0.000	A
C-D	80	20			80				
C-A	81	20			81				

Existing Layout - 2028 Base + Development, PM

Data Errors and Warnings

No errors or warnings

Junction Network

Junctions

Junction	Name	Junction type	Major road direction	Use circulating lanes	Junction Delay (s)	Junction LOS
1	untitled	Crossroads	Two-way		2.40	A

Junction Network Options

Driving side	Lighting
Left	Normal/unknown

Traffic Demand

Demand Set Details

ID	Scenario name	Time Period name	Traffic profile type	Start time (HH:mm)	Finish time (HH:mm)	Time segment length (min)	Run automatically
D10	2028 Base + Development	PM	ONE HOUR	16:45	18:15	15	✓

Default vehicle mix	Vehicle mix varies over turn	Vehicle mix varies over entry	Vehicle mix source	PCU Factor for a HV (PCU)
✓	✓	✓	HV Percentages	2.00

Demand overview (Traffic)

Arm	Linked arm	Profile type	Use O-D data	Average Demand (PCU/hr)	Scaling Factor (%)
A		ONE HOUR	✓	94	100.000
B		ONE HOUR	✓	4	100.000
C		ONE HOUR	✓	436	100.000
D		ONE HOUR	✓	142	100.000

Origin-Destination Data

Demand (PCU/hr)

		To			
		A	B	C	D
From	A	0	0	88	6
	B	0	0	4	0
	C	269	0	0	167
	D	22	0	120	0

Vehicle Mix

Heavy Vehicle Percentages

		To			
		A	B	C	D
From	A	10	10	10	10
	B	10	10	10	10
	C	10	10	10	10
	D	10	10	10	10

Results

Results Summary for whole modelled period

Stream	Max RFC	Max Delay (s)	Max Queue (PCU)	Max LOS	Average Demand (PCU/hr)	Total Junction Arrivals (PCU)
B-CD	0.00	0.00	0.0	A	0	0
B-AD	0.00	0.00	0.0	A	0	0
A-BCD	0.01	6.70	0.0	A	6	10
A-B					0	0
A-C					80	120
D-ABC	0.30	10.99	0.5	B	131	196
C-ABD	0.00	0.00	0.0	A	0	0
C-D					153	230
C-A					247	370

Main Results for each time segment

16:45 - 17:00

Stream	Total Demand (PCU/hr)	Junction Arrivals (PCU)	Capacity (PCU/hr)	RFC	Throughput (PCU/hr)	Start queue (PCU)	End queue (PCU)	Delay (s)	Unsignalised level of service
B-CD	0	0	579	0.000	0	0.0	0.0	0.000	A
B-AD	0	0	498	0.000	0	0.0	0.0	0.000	A
A-BCD	5	1	612	0.008	5	0.0	0.0	6.527	A
A-B	0	0			0				
A-C	66	16			66				
D-ABC	107	27	554	0.194	106	0.0	0.3	8.819	A
C-ABD	0	0	626	0.000	0	0.0	0.0	0.000	A
C-D	126	31			126				
C-A	203	51			203				

17:00 - 17:15

Stream	Total Demand (PCU/hr)	Junction Arrivals (PCU)	Capacity (PCU/hr)	RFC	Throughput (PCU/hr)	Start queue (PCU)	End queue (PCU)	Delay (s)	Unsignalised level of service
B-CD	0	0	569	0.000	0	0.0	0.0	0.000	A
B-AD	0	0	485	0.000	0	0.0	0.0	0.000	A
A-BCD	6	2	606	0.010	6	0.0	0.0	6.600	A
A-B	0	0			0				
A-C	78	20			78				
D-ABC	128	32	539	0.238	128	0.3	0.3	9.636	A
C-ABD	0	0	623	0.000	0	0.0	0.0	0.000	A
C-D	150	38			150				
C-A	242	60			242				

17:15 - 17:30

Stream	Total Demand (PCU/hr)	Junction Arrivals (PCU)	Capacity (PCU/hr)	RFC	Throughput (PCU/hr)	Start queue (PCU)	End queue (PCU)	Delay (s)	Unsignalised level of service
B-CD	0	0	555	0.000	0	0.0	0.0	0.000	A
B-AD	0	0	467	0.000	0	0.0	0.0	0.000	A
A-BCD	8	2	599	0.013	8	0.0	0.0	6.700	A
A-B	0	0			0				
A-C	96	24			96				
D-ABC	157	39	517	0.303	156	0.3	0.5	10.955	B
C-ABD	0	0	618	0.000	0	0.0	0.0	0.000	A
C-D	184	46			184				
C-A	296	74			296				

17:30 - 17:45

Stream	Total Demand (PCU/hr)	Junction Arrivals (PCU)	Capacity (PCU/hr)	RFC	Throughput (PCU/hr)	Start queue (PCU)	End queue (PCU)	Delay (s)	Unsignalised level of service
B-CD	0	0	555	0.000	0	0.0	0.0	0.000	A
B-AD	0	0	467	0.000	0	0.0	0.0	0.000	A
A-BCD	8	2	599	0.013	8	0.0	0.0	6.703	A
A-B	0	0			0				
A-C	96	24			96				
D-ABC	157	39	517	0.303	157	0.5	0.5	10.988	B
C-ABD	0	0	618	0.000	0	0.0	0.0	0.000	A
C-D	184	46			184				
C-A	296	74			296				

17:45 - 18:00

Stream	Total Demand (PCU/hr)	Junction Arrivals (PCU)	Capacity (PCU/hr)	RFC	Throughput (PCU/hr)	Start queue (PCU)	End queue (PCU)	Delay (s)	Unsignalised level of service
B-CD	0	0	569	0.000	0	0.0	0.0	0.000	A
B-AD	0	0	485	0.000	0	0.0	0.0	0.000	A
A-BCD	6	2	606	0.010	6	0.0	0.0	6.600	A
A-B	0	0			0				
A-C	78	20			78				
D-ABC	128	32	539	0.238	129	0.5	0.3	9.669	A
C-ABD	0	0	623	0.000	0	0.0	0.0	0.000	A
C-D	150	38			150				
C-A	242	60			242				

18:00 - 18:15

Stream	Total Demand (PCU/hr)	Junction Arrivals (PCU)	Capacity (PCU/hr)	RFC	Throughput (PCU/hr)	Start queue (PCU)	End queue (PCU)	Delay (s)	Unsignalised level of service
B-CD	0	0	579	0.000	0	0.0	0.0	0.000	A
B-AD	0	0	497	0.000	0	0.0	0.0	0.000	A
A-BCD	5	1	612	0.008	5	0.0	0.0	6.528	A
A-B	0	0			0				
A-C	66	16			66				
D-ABC	107	27	554	0.194	108	0.3	0.3	8.873	A
C-ABD	0	0	626	0.000	0	0.0	0.0	0.000	A
C-D	126	31			126				
C-A	203	51			203				