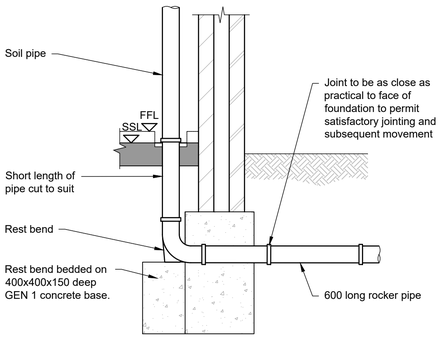

TYPICAL SOIL VENT PIPE/STUB STACK/WC DETAIL

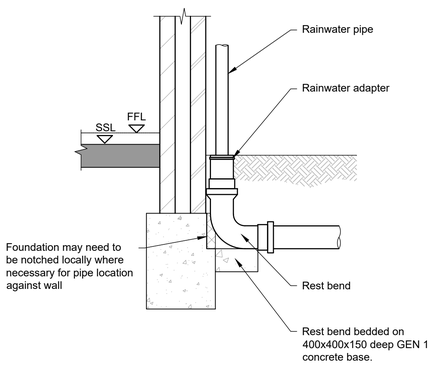

RAINWATER DOWN PIPE TO DRAIN (SURFACE WATER SYSTEM)

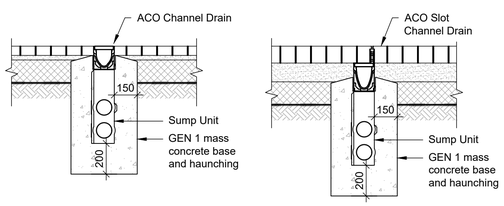

SUMP UNIT CHANNEL/SLOT DRAIN DETAIL (ACO M100D UNIVERSAL SUMP)

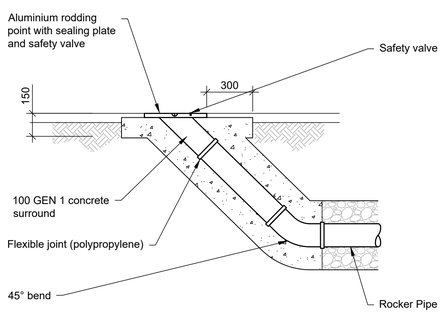

RODDING EYE

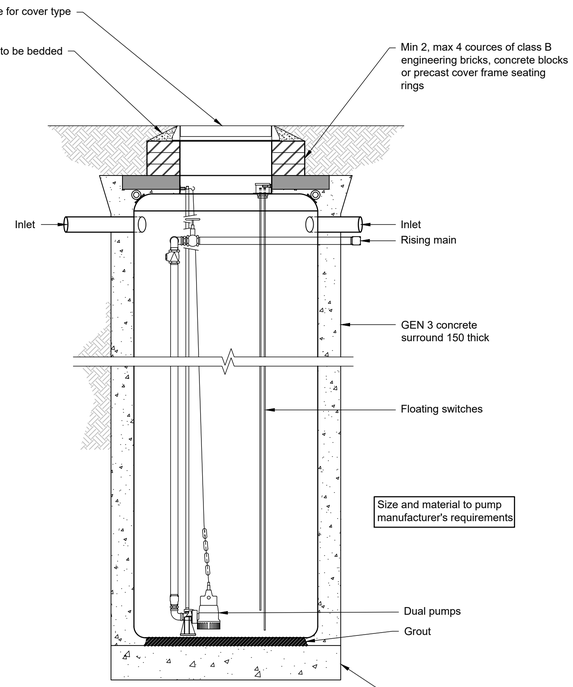

SECTION

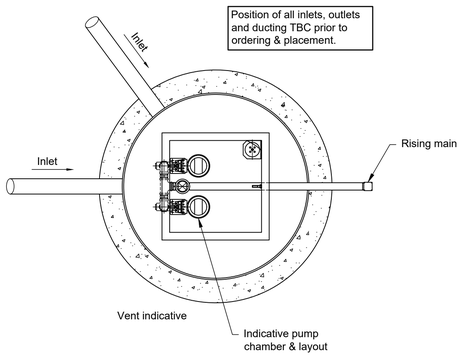

GRP PUMP CHAMBER - PLAN VIEW

PRE-PACKAGED PUMP CHAMBER FOR EXTERNAL USE SUBJECT TO DESIGN FROM SPECIALIST SUPPLIER

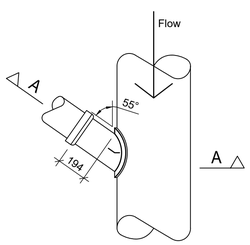

SADDLE CONNECTION - PLAN VIEW

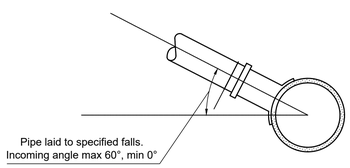

SADDLE CONNECTION - SECTION A-A

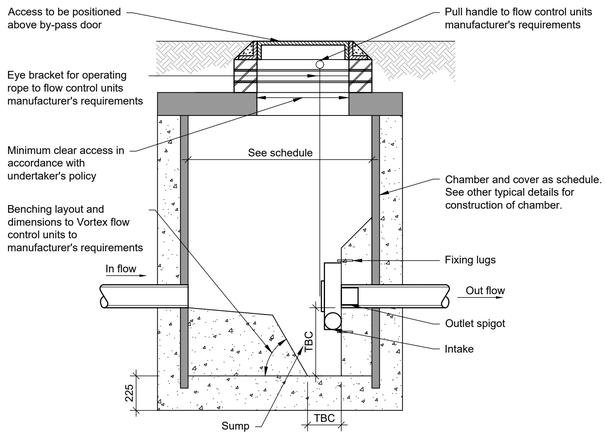

VORTEX FLOW CONTROL CHAMBER - SECTION A-A

TO MANUFACTURER'S REQUIREMENTS

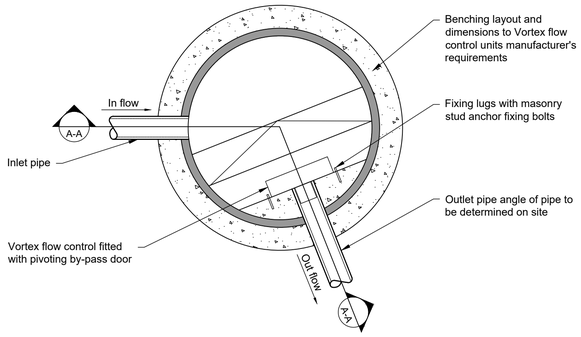

VORTEX FLOW CONTROL CHAMBER - PLAN VIEW

THIS DRAWING IS TO BE READ IN CONJUNCTION WITH ALL OTHER HBL DRAWINGS ISSUED FOR THIS PROJECT

PRIVATE DRAINAGE NOTES

1. ALL DIMENSIONS ARE IN MILLIMETRES AND LEVELS IN METERS UNLESS OTHERWISE SPECIFIED.
2. THIS DRAWING IS TO BE READ IN CONJUNCTION WITH ALL OTHER RELATED DRAWINGS AND SPECIFICATIONS.
3. THE DRAINAGE CONTRACTOR IS RESPONSIBLE TO MAKING AN APPLICATION TO ANY SEWERAGE UNDERTAKER PRIOR TO CONSTRUCTION OF ANY CONNECTION INTO A PUBLIC MANHOLE.
4. THE ENGINEER IS TO BE NOTIFIED OF ANY DISCREPANCIES TO THE DETAILS SHOWN ON THE DRAINAGE AND ANY UNRECORDED CONNECTIONS NOT SHOWN ON THE DRAWINGS.
5. THE CONTRACTOR IS RESPONSIBLE FOR CHECKING DIMENSIONS AND LEVELS AND FOR CONFIRMING THE GIVEN LEVEL OF OUTFALL INTO PUBLIC SEWER, WATERCOURSE OR OTHER OUTFALL PRIOR TO CONSTRUCTION WORKS COMMENCING.
6. UNTIL TECHNICAL APPROVAL HAS BEEN OBTAINED FROM THE RELEVANT AUTHORITIES ALL DRAWINGS ISSUED ARE AS PRELIMINARY AND NOT FOR CONSTRUCTION. SHOULD THE CONTRACTOR COMMENCE SITE WORK PRIOR TO APPROVAL BEING GIVEN, IT IS ENTIRELY AT THEIR OWN RISK.
7. TO PROTECT THE DRAINAGE SYSTEM FROM CONSTRUCTION SITE DERBIES, THE CONTRACTOR SHALL ENSURE THAT STOPPERS ARE SECURELY PLACED IN ALL CONNECTIONS IMMEDIATELY UPSTREAM OF THE TANK, ONLY TO BE REMOVED ONCE THE FINAL CLEANING OF THE ROADS/ DRAINAGE HAS BEEN COMPLETED.
8. THE DESIGN IS BASED ON THE INFORMATION AVAILABLE ON THE DATE OF ISSUE FROM OTHER PARTIES (E.G. ARCHITECT AND M&E ENGINEER), IT IS SUBJECT TO CHANGE RESULTING FROM UPDATES TO THE AVAILABLE INFORMATION FROM OTHERS.
9. NEW DRAINS AND SEWERS TO BE AS FOLLOWS:
   - 9.1. CONSTRUCTION AND MATERIALS OF PRIVATE SURFACE, FOUL & COMBINED WATER SEWERAGE SYSTEM TO BE IN ACCORDANCE WITH "BUILDING REGULATIONS - APPROVED DOCUMENT H" & "BS EN 752:2017 DRAIN AND SEWER SYSTEMS OUTSIDE BUILDINGS"
   - 9.2. CONSTRUCTION AND MATERIALS OF PUBLIC SURFACE, FOUL & COMBINED WATER SEWERS TO BE IN ACCORDANCE WITH "DESIGN & CONSTRUCTION GUIDANCE, SEWERAGE SECTOR GUIDANCE APPENDIX C" AND IN ACCORDANCE WITH LOCAL SEWERAGE UNDERTAKER
   - 9.3. MINIMUM PIPE SIZE FOR ADOPTABLE SURFACE WATER DRAINAGE IS 150mmDN
     - 9.3.1. 100mmDN AT MIN 1:100 FOR 10 DWELLINGS OR LESS
     - 9.3.2. 150mmDN AT MIN 1:150 FOR GREATER THAN 10 DWELLINGS
   - 9.4. MINIMUM PIPE SIZE FOR ADOPTABLE FOUL WATER DRAINAGE IS 100mmDN
     - 9.4.1. 100mmDN 1:40 WHERE 10 DWELLINGS OR LESS AND NO WC.
     - 9.4.2. 100mmDN 1:80 WHERE GREATER THAN 10 DWELLINGS AND AT LEAST 1 WC
   - 9.5. ALL ROAD GULLY PIPEWORK SPURS TO BE 150mmDN UNLESS OTHERWISE SPECIFIED
10. LOAD CLASS SELECTION TO COMPLY WITH BS EN 124.
    - 10.1. LOAD CLASS A15 - AREAS INACCESSIBLE TO MOTOR VEHICLES
    - 10.2. LOAD CLASS B125 - FOOTWAYS, PEDESTRIAN AREAS ETC
    - 10.3. LOAD CLASS D250 - GULLY TOPS IN KERBSIDE CHANNELS OF ROADS
    - 10.4. LOAD CLASS D400 - CARRIAGEWAYS OF ROADS (HEAVY DUTY)
    - 10.5. LOAD CLASS E600 - AREAS IMPOSING HIGH WHEEL LOADS
    - 10.6. LOAD CLASS F900 - AREAS IMPOSING PARTICULARLY HIGH WHEEL LOADS
11. ALL FOUL DRAINS BENEATH BUILDINGS AND FROM SOIL VENT PIPES, GULLIES AND WC CONNECTIONS BE 100mmDN AT A GRADIENT NOT LESS THAN OF 1:40.
12. ALL FOUL CONNECTIONS TO BE FULLY TRAPPED AND EACH FOUL CONNECTION TO A BRANCH DRAIN TO HAVE FULL RODDING ACCESS (E.G. LOW-LEVEL RODDING ACCESS).
13. RAINWATER DOWN PIPES ARE TO CONNECT TO A DRAIN VIA A REST BEND.
14. WHERE DRAINAGE IS COMBINED A 'P' TRAP MUST BE PROVIDED ABOVE PROPOSED FLOOR SLAB LEVEL.
15. MINIMUM DEPTH OF COVER TO THE CROWN OF GRAVITY PIPES WITHOUT PROTECTION SHOULD BE AS FOLLOWS (IN ACCORDANCE WITH "DESIGN & CONSTRUCTION GUIDANCE, SEWERAGE SECTOR GUIDANCE APPENDIX C")
    - 15.1. 350mm - DOMESTIC GARDENS AND PATHWAYS WITHOUT ANY POSSIBILITY OF VEHICULAR ACCESS.
    - 15.2. 500mm - DOMESTIC DRIVEWAYS, PARKING AREAS AND YARDS WITH HEIGHT RESTRICTIONS TO PREVENT ENTRY BY VEHICLES WITH A GROSS WEIGHT IN EXCESS OF 7.5 TONNES.
    - 15.3. 900mm - DOMESTIC DRIVEWAYS, PARKING AREAS AND NARROW STREETS WITH LIMITED ACCESS FOR VEHICLES WITH A GROSS WEIGHT IN EXCESS OF 7.5 TONNES.
    - 15.4. 900mm - AGRICULTURAL LAND & PUBLIC OPEN SPACE.
    - 15.5. 1200mm - HIGHWAYS AND PARKING AREAS WITH UNRESTRICTED ACCESS TO VEHICLE WITH A GROSS WEIGHT IN EXCESS OF 7.5 TONNES.
16. BACKFILL TO DRAINAGE TRENCHES UNDER CARRIAGEWAYS TO BE TYPE 1 SUB-BASE MATERIAL, ELSEWHERE BACKFILL TO BE FREE DRAINING READILY AVAILABLE COMPACTABLE MATERIAL FREE FROM RUBBISH, ORGANIC MATTER, FROZEN SOIL, CLAY LUMPS AND LARGE STONES. TO BE COMPACTED IN LAYERS NOT EXCEEDING 250mm THICK.
17. A FLEXIBLE JOINT SHALL BE PROVIDED AS CLOSE AS IS FEASIBLE TO THE OUTSIDE FACE OF ANY STRUCTURE INTO WHICH A PIPE IS BUILT, COMPATIBLE WITH THE SATISFACTORY COMPLETION AND SUBSEQUENT MOVEMENTS OF THE JOINT. LENGTH OF THE NEXT PIPE (ROCKER PIPE) IS TO BE IN ACCORDANCE WITH THE TABLE BELOW
    - 17.1. 150-600mmDN - 600mm LONG ROCKER PIPE
    - 17.2. 601-750mmDN - 1000mm LONG ROCKER PIPE
    - 17.3. 751mmDN AND ABOVE - 1250mm LONG ROCKER PIPE
18. PIPE CROSSOVERS TO HAVE MINIMUM OF 300mm CLEARANCE BETWEEN OUTSIDE TOP OF THE LOWER PIPE AND OUTSIDE BOTTOM OF THE UPPER PIPE. WHERE THIS CANNOT BE ACHIEVED A SEPARATION. CONCRETE SURROUND IS TO BE FORMED WHICH WILL EXTEND NOT LESS THE 1000mm EACH SIDE OF THE CROSSING POINT, THE EXTENT OF THE CONCRETE SHOULD BE WITHIN 150mm OF A FLEXIBLE PIPE JOINT. THE CONCRETE SPECIFICATION SHOULD BE IN ACCORDANCE WITH THE STANDARD DETAILS FOR PIPE BED AND SURROUND AS ISSUED BY THE ENGINEER.
19. CONCRETE MIXES INDICATED ON THIS DRAWING ARE DESIGNATED MIXES CONFORMING TO BS 8500-1:2006. ALL CONCRETE TO BE SULPHATE RESISTANT. CONTRACTOR SHOULD ALLOWANCE FOR CARRYING OUT TESTING ONSITE TO CONFIRM SULPHATE LEVEL CLASSIFICATION.
20. ALL PRIVATE MANHOLES AND INSPECTION CHAMBERS TO BE CONSTRUCTED IN ACCORDANCE WITH "BUILDING REGULATIONS - APPROVED DOCUMENT H" & "BS EN 752:2017 DRAIN AND SEWER SYSTEMS OUTSIDE BUILDINGS".
21. ALL MANHOLES AND INSPECTION CHAMBERS TO BE ADOPTED TO BE CONSTRUCTED IN ACCORDANCE WITH "IN ACCORDANCE WITH "DESIGN & CONSTRUCTION GUIDANCE, SEWERAGE SECTOR GUIDANCE APPENDIX C" AND IN ACCORDANCE WITH LOCAL SEWERAGE UNDERTAKER.
22. CCTV SURVEY OF ALL THE DRAINAGE SHOULD BE CARRIED OUT ON COMPLETION OF THE BUILDING WORKS AND PASSED ON TO THE CLIENT.
23. ANY EXISTING DRAINAGE INFRASTRUCTURE TO BE RETAINED TO HAVE NEW COVERS AND FRAMES TO SUIT NEW LEVELS AND SURFACING.
24. WHERE DRAINAGE RUNS PASS BELOW FOUNDATIONS, PIPES TO BE ENCASED IN MIN.100mm CONCRETE SURROUND AND SURROUND WRAPPED IN 50mm COMPRESSIBLE MATERIAL (TOP & SIDES) PIPE SLEEVED THROUGH FOUNDATIONS AND FITTED WITH ROCKER PIPE. FOUNDATIONS ADJACENT TO DRAIN RUN TO BE DEEPENED LOCALLY TO INVERT OF DRAINAGE PIPE TO AVOID SURCHARGE LOADING.
25. WHERE DRAINAGE RUNS PASS ABOVE FOUNDATIONS, PROVIDE 65mm DEEP PRE-STRESSED CONCRETE LINTELS e.g. 'NAYLOR' Ref. P100

TENDER
FOR TENDER PURPOSES ONLY

REV.	DATE	DRAWN	DESCRIPTION	CHKD	APPRD
P01	30.04.26	JLB	FIRST ISSUE - FOR INFORMATION	MS	MS

STATUS DESCRIPTION: FOR INFORMATION
STATUS: S2

HBL
Craig House,
33 Ballbrook Avenue,
Manchester M20 3JG
+44(0)161 432 9977 | www.hbl.ltd
Consulting Civil & Structural Engineers

PROJECT: FOTHERGILL EXTENSION

DRAWING TITLE: DRAINAGE CONSTRUCTION DETAILS SHEET 2 OF 3

CLIENT: FOTHERGILL COATED FABRICS LIMITED

HBL REF.	DATE	A1 SCALE(S)
11122	30.04.26	N.T.S

DRAWING No.: 11122-XX-XX-DR-C-5251
REVISION: P01

© Copyright HBL Associates Ltd.